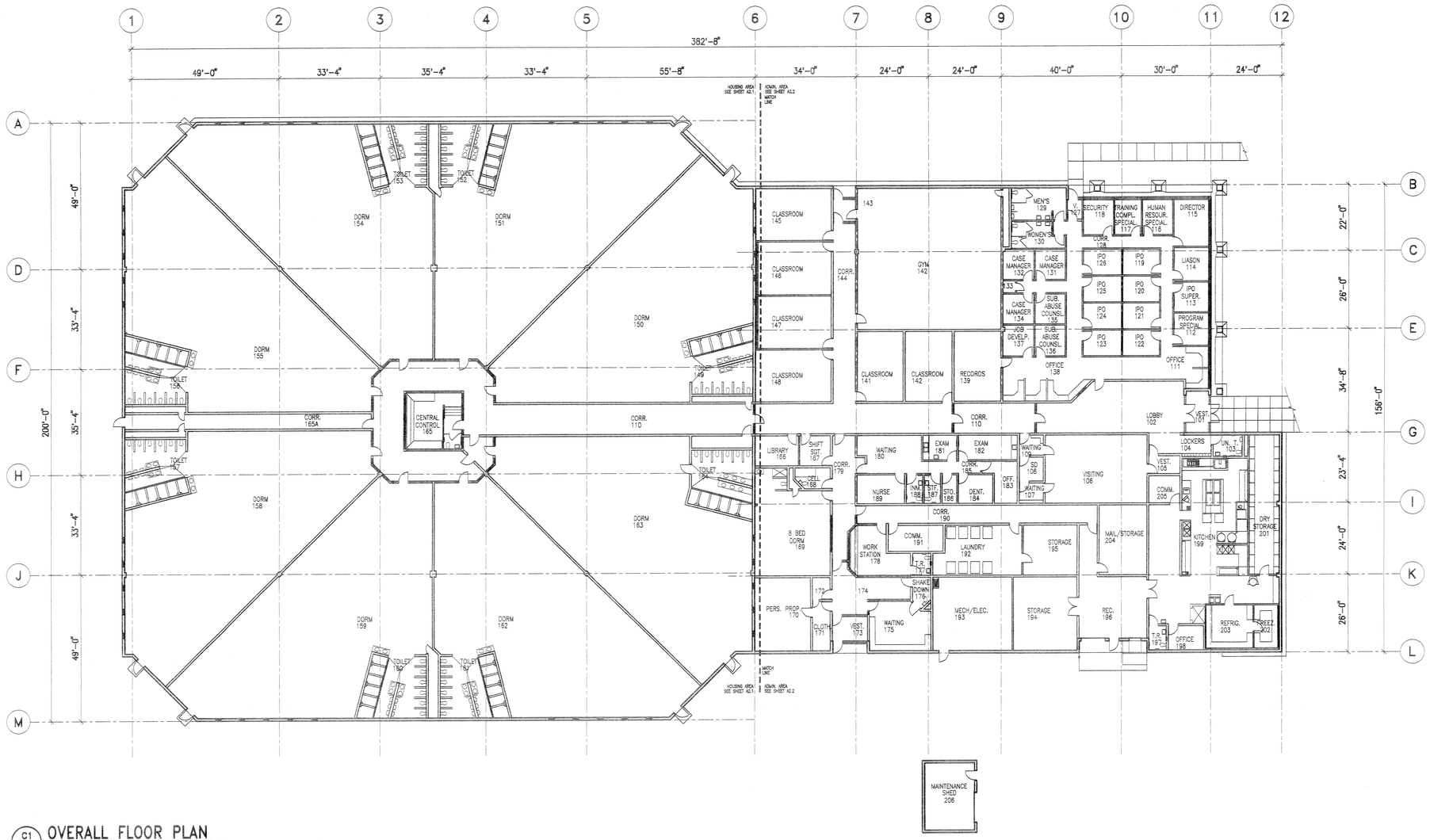


C1 A2.0 OVERALL FLOOR PLAN
SCALE: 1/16" = 1'-0"

NORTH

STATE OF UTAH
ABRAM G. GILLIES
NO. 1[illegible]
LICENSED ARCHITECT


Walker Center, Suite 900
175 South Main
Salt Lake City, Utah 84111
Telephone 801 521 8600
Facsimile 801 521 2013
Architects
GILLIES STRANSKY BREMS SMITH


# KEYNOTE LIST

SPECIFICATION SECTION NUMBERS USED IN KEYNOTE REFERENCES ARE FOR QUICK REFERENCE ONLY, AND MAY NOT BE INCLUSIVE OF ALL ITEMS REQUIRED.

## PRE-RELEASE PROBATION AND PAROLE VIOLATOR CENTER

UTAH STATE PRISON
DRAPER, UTAH

Division of Facilities Construction and Management
Utah Dept. of Corrections

DFCM CD-94055

OVERALL PLAN

| | |
|---|---|
| PROJECT NO. | A2.0 |
| DATE OCT. 21, 1994 | |
| DRAWN JWB | |
| CHECKED | BINDING ORDER |

94023.00

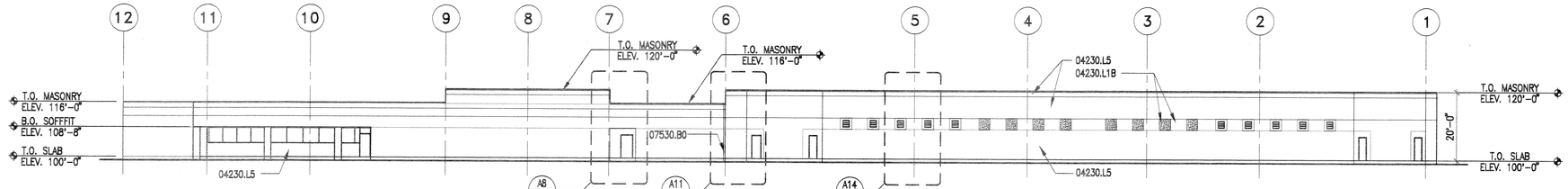


P3 A3.1 WEST ELEVATION
SCALE: 1/16" = 1'-0"

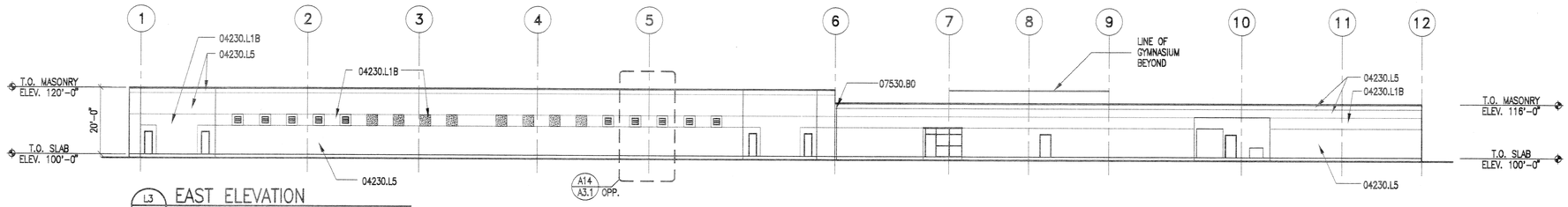


L3 A3.1 EAST ELEVATION
SCALE: 1/16" = 1'-0"

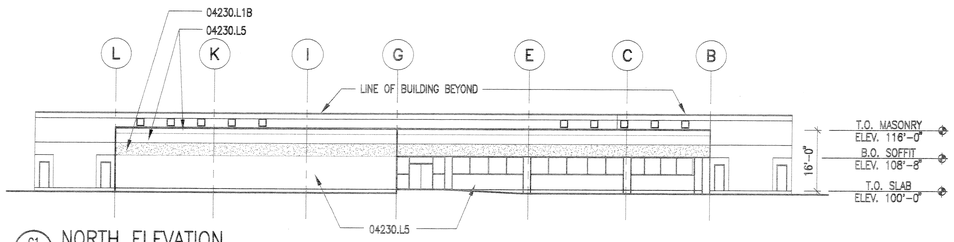


G1 A3.1 NORTH ELEVATION
SCALE: 1/16" = 1'-0"

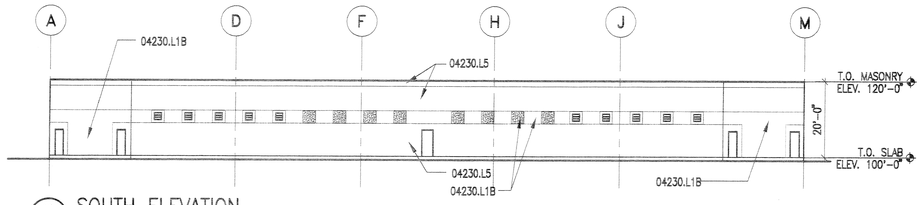


G9 A3.1 SOUTH ELEVATION
SCALE: 1/16" = 1'-0"

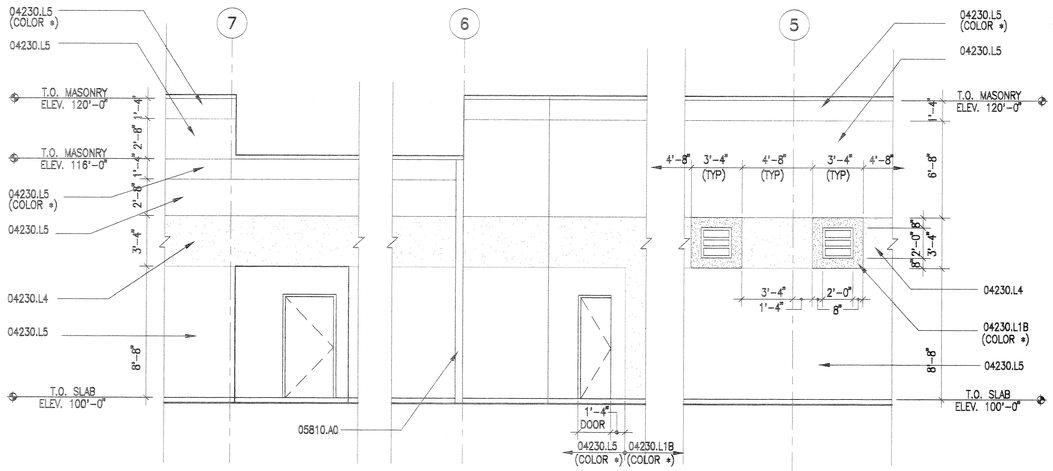


A8 A3.1 ENLARGED ELEVATION
SCALE: 1/4" = 1'-0"

A11 A3.1 ENLARGED ELEVATION
SCALE: 1/4" = 1'-0"

A14 A3.1 ENLARGED ELEVATION
SCALE: 1/4" = 1'-0"

STATE OF UTAH
ABRAM G. GILLIES
No. 19221
LICENSED ARCHITECT


Architects
GILLIES STRANSKY BREMS SMITH


# KEYNOTE LIST

SPECIFICATION SECTION NUMBERS USED IN KEYNOTE REFERENCES ARE FOR QUICK REFERENCE ONLY, AND MAY NOT BE INCLUSIVE OF ALL ITEMS REQUIRED.

DIV 4 MASONRY

04230.L1B COLORED SPLIT-FACED CONCRETE MASONRY UNIT
04230.L4 SPLIT-FACED CONCRETE MASONRY UNITS
04230.L5 SMOOTH-FACE CONCRETE MASONRY UNITS

DIV 5 METALS

05810.A0 EXPANSION JOINT COVER

DIV 7 THERMAL & MOISTURE PROTECTION

07530.B0 EXPANSION JOINT

## PRE-RELEASE PROBATION AND PAROLE VIOLATOR CENTER

UTAH STATE PRISON
DRAPER, UTAH

Division of Facilities Construction and Management
Utah Dept. of Corrections

DFCM CD94055

EXTERIOR ELEVATIONS

| | |
|---|---|
| PROJECT NO. | A3.1 |
| DATE OCT. 21, 1994 | |
| DRAWN JWB | |
| CHECKED | BINDING ORDER |

94023.00

J:\CADD\94023\C3-A3-1 Tue Oct 18 16:46:24 1994

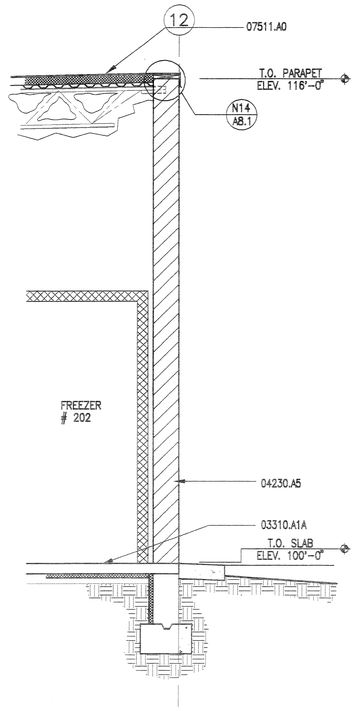


J4 A3.2 WALL SECTION
SCALE: 1/2" = 1'-0"

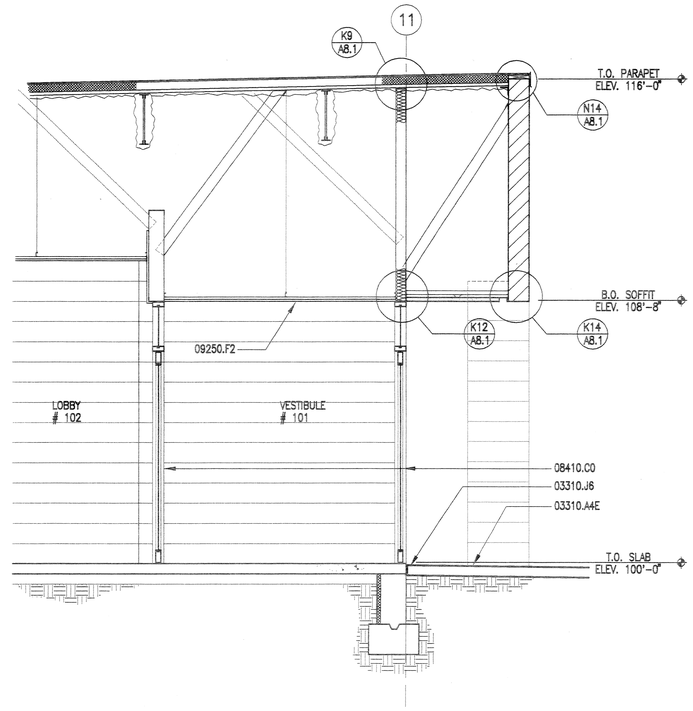


J7 A3.2 WALL SECTION
SCALE: 1/2" = 1'-0"

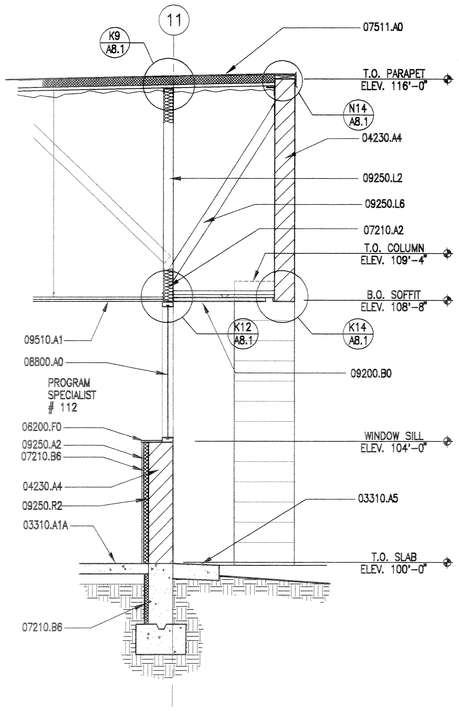


J14 A3.2 WALL SECTION
SCALE: 1/2" = 1'-0"

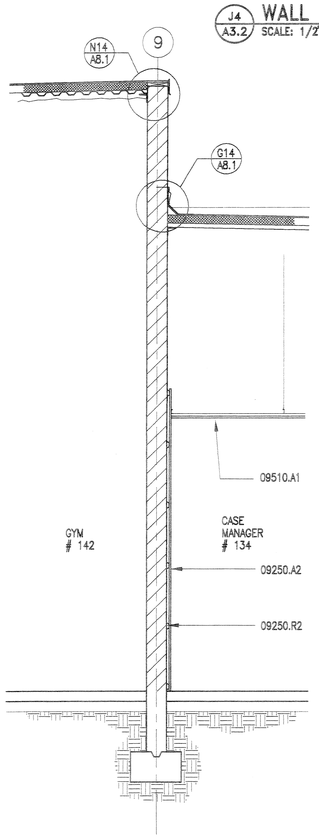


A2 A3.2 WALL SECTION
SCALE: 1/2" = 1'-0"

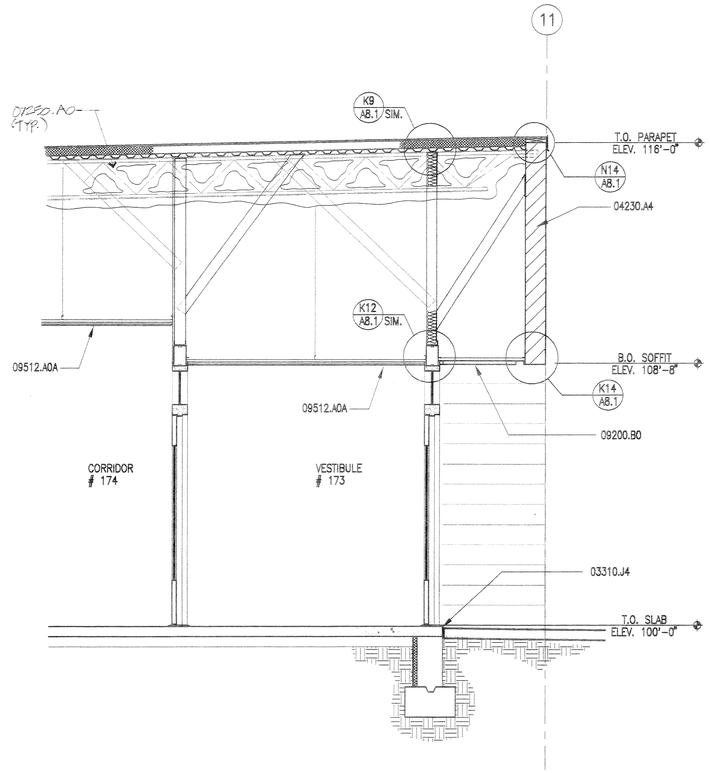


A7 A3.2 WALL SECTION
SCALE: 1/2" = 1'-0"

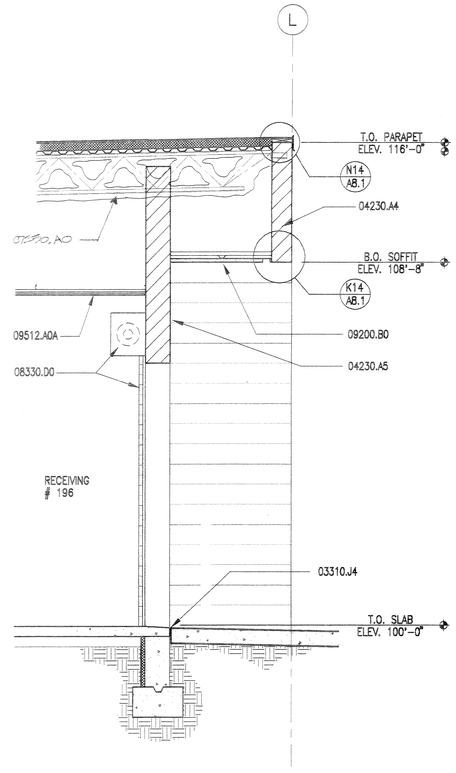


A14 A3.2 WALL SECTION
SCALE: 1/2" = 1'-0"

STATE OF UTAH
ABRAM G. GILLIES
NO. 115211
LICENSED ARCHITECT

Walker Center, Suite 500
175 South Main
Salt Lake City, Utah 84111
Telephone 801 521 8600
Facsimile 801 521 9311

Architects
GILLIES STRANSKY BREMS SMITH

# KEYNOTE LIST

**SPECIFICATION SECTION NUMBERS USED IN KEYNOTE REFERENCES ARE FOR QUICK REFERENCE ONLY, AND MAY NOT BE INCLUSIVE OF ALL ITEMS REQUIRED.**

DIV 3 CONCRETE

03310.A1A CONCRETE SLAB – 4"
03310.A4E BROOM FINISHED CONCRETE SLAB
03310.A5 CONCRETE CURB
03310.J4 ISOLATION JOINT
03310.J6 EXPANSION JOINT

DIV 4 MASONRY

04230.A4 REINFORCED CONCRETE MASONRY UNITS – 8"
04230.A5 REINFORCED CONCRETE MASONRY UNITS – 10"

DIV 6 WOOD AND PLASTICS

06200.F0 HARDWOOD SILL

DIV 7 THERMAL & MOISTURE PROTECTION

07210.A2 R-11 BATT INSULATION (3-1/2")
07210.B6 RIGID INSULATION-JEN
07511.A0 BUILT-UP ROOF

DIV 8 DOORS AND WINDOWS

08330.D0 OVERHEAD COILING DOOR

08410.C0 ALUMINUM ENTRANCE DOOR

08800.A0 GLAZING AS SCHEDULED

DIV 9 FINISHES

09200.B0 SUSPENDED PLASTER SOFFIT

09250.A2 GYPSUM BOARD – 5/8"
09250.F2 GYPSUM BOARD CEILING – 5/8"
09250.L2 3 5/8" METAL STUDS AT 16" ON CENTER
09250.L6 3 5/8" METAL STUDS STAGGERED
09250.R2 7/8" FURRING CHANNEL

09510.A1 SUSPENDED ACOUSTICAL CEILING PANELS

09512.A0A ACOUSTICAL TILE CEILING GLUED TO GYPSUM BOARD

# PRE-RELEASE PROBATION AND PAROLE VIOLATOR CENTER

UTAH STATE PRISON
DRAPER, UTAH

Division of Facilities Construction and Management
Utah Dept. of Corrections

DFCM CD94055

WALL SECTIONS

| | |
|---|---|
| PROJECT NO. | A3.2 |
| DATE OCT. 21, 1994 | |
| DRAWN JWB | |
| CHECKED | BINDING ORDER |

94023.00

J:\CADD\94023\CD3\A3.2 Tue Oct 18 13:31:29 1994