ADDENDA AND MODIFICATIONS

ADDENDUM NUMBER: 1 **DATE:** July 21, 2005

PROJECT: WORKFORCE SERVICES
DFCM PROJECT NO. 04045920
Architect Project No. 04139

ISSUED BY: ARCHITECTURAL NEXUS, INC.
Bruce Haslem, Architect

This Addendum Number 1 forms part of the Contract Documents and modifies the original Bid Documents. Acknowledge receipt of this Addendum Number 1 in the space provided on the Bid Form. Failure to do so may subject the Bidder to disqualification.

This addendum consists of 27 pages.

1 – CHANGES TO PRIOR ADDENDA: NONE

2 – CHANGES TO BIDDING REQUIREMENTS: NONE

3 – CHANGES TO AGREEMENT AND OTHER CONTRACT FORMS: NONE

4 – CHANGES TO CONDITIONS OF THE CONTRACT: NONE

5 – CHANGES TO SPECIFICATIONS:

Item 1. Specification Section 03450 "Precast Concrete"
Product Approval: Continental Select Stone Manufacturing, Inc. is approved as a supplier for precast lintels and sills shown on this project. The cast stone is required to span the windows as a lintel without any angle lintel steel. Thus this approval is conditional on the cast stone product being adequate to act as a self-supporting lintel, without the use of angle iron as the lintel support.

Item 2. Specification Section 08710 "Door Hardware"
Make the following changes to the schedule:
Item A. Change all Hinges BB 1199 to be BB 1191.
Change all Hinges BB 1168 to be BB 1279

Item B. Add Hardware Set #7 not shown as follows:

1 ½	Pair	Hinges	BB 1191 4 ½ x 4 ½	Hager
1	Each	Exit Device	98 L	Von Duprin
1	Each	Closer	4110 Series	LCN
1	Each	Wall Stop	W 302	Quality

Item C. On Hardware Set No. 11:
Change Exit Device to A 98 L
Change Hinges to 1 ½ pair
Delete Dustproof Strike
Delete Lockset

Item D. On Hardware Set No. 14:
Change Exit Device to 98 L

6 – CHANGES TO DRAWINGS:

Item 1. Drawings A101
Add blocking in the longest angled wall southeast of Employ 102. This blocking is for the Workforce Services sign to be hung on that wall. Coordinate location of blocking with Workforce Services.

Item 2. Drawings A101 & A102
Change the wall types around Rooms 205, 206 and 120 to S31.

Item 3. Drawings A601
Change door ratings on doors 120, 205, and 206 to be 60 minutes.

Item 4. Drawing AS101
Per attached drawing ADD2, revise grades as shown.

Item 5. Drawing AS103
Add a new fire hydrant per attached drawing ADD1.

Item 6. Drawing Sheet AI601
Finish Schedule:
Room #127 Ceiling type change from PC1to XC1
Room #217 Ceiling type change from PC1 to LC2

7 – OTHER DISCIPLINES INCLUDED:

Structural	11 Pages
Mechanical (2)	7 Pages
Electrical	4 Pages

8 – CLARIFICATIONS: NONE

END OF ADDENDUM

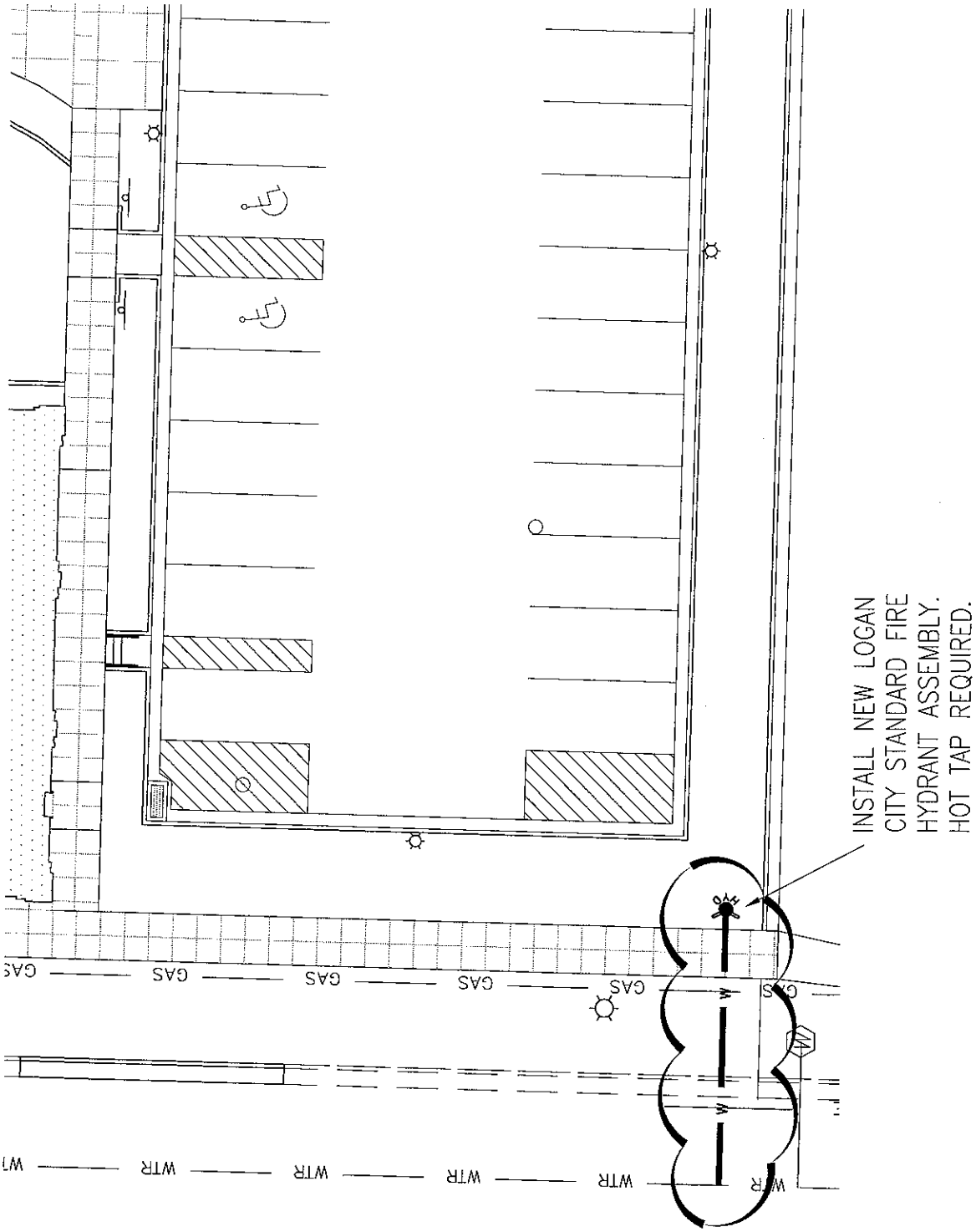

ARCHITECTURAL nexus
SALT LAKE CITY LOGAN PHOENIX

Architectural NEXUS, Inc.
135 North Main Street, Suite 200
Logan, Utah 84321
T 435.752.2141 F 435.752.4160
http://www.archinexus.com

PROPERTY #09933
WORKFORCE SERVICES

LOGAN, UTAH

NEXUS PROJECT #:	04139
CHECKED BY:	B. HASLEM
DRAWN BY:	D.B.
CURRENT/BID DATE:	07/18/05

SHEET CONTENTS

AS103

ADD1

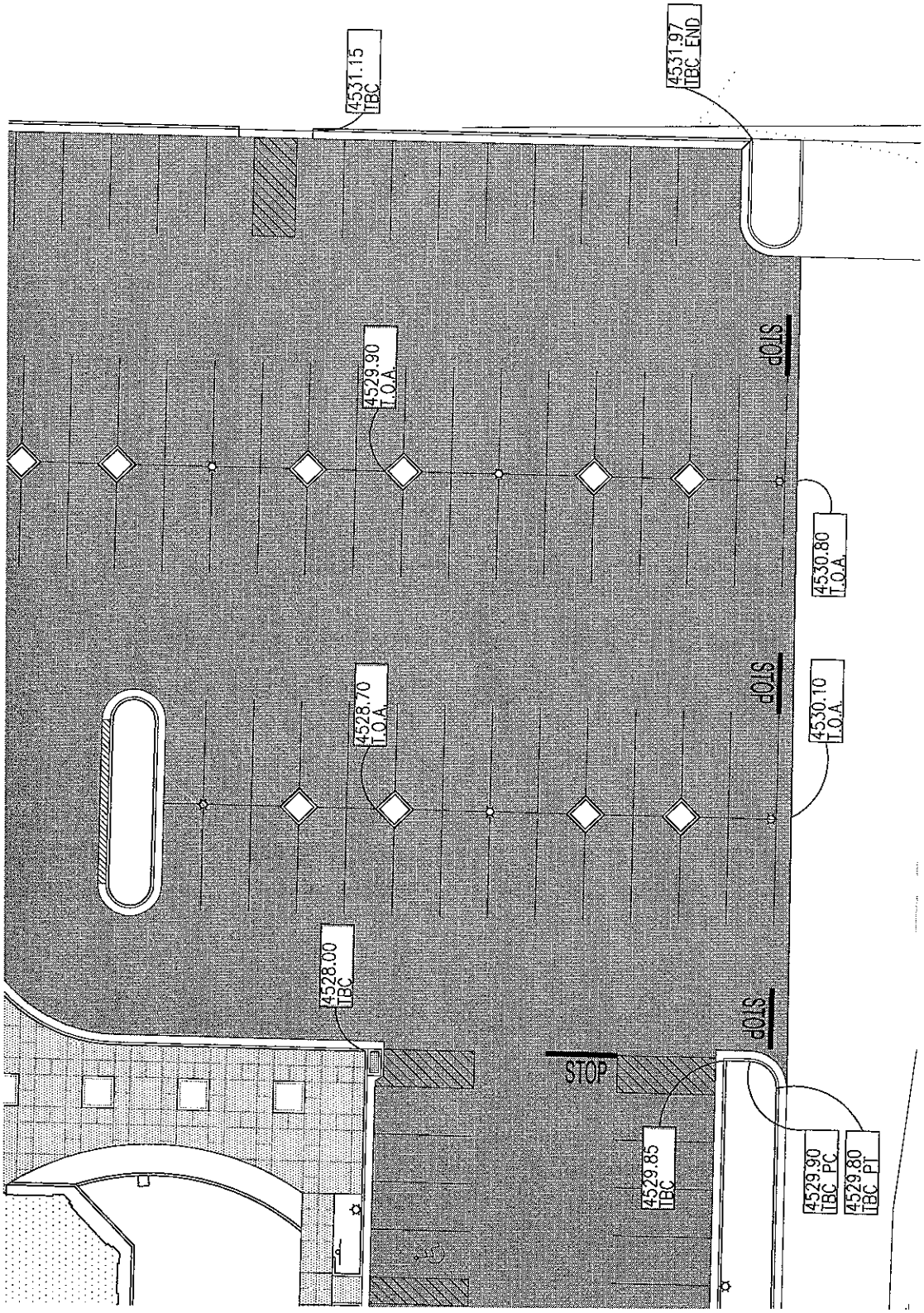

REVISE GRADES AS SHOWN.

ARCHITECTURAL nexus
SALT LAKE CITY LOGAN PHOENIX

Architectural NEXUS, Inc.
135 North Main Street, Suite 200
Logan, Utah 84321
T. 435.752.2141 F. 435.752.4160
http://www.archinexus.com

PROPERTY #09933
WORKFORCE SERVICES

LOGAN, UTAH

NEXUS PROJECT #:	04139
CHECKED BY:	B. HASLEM
DRAWN BY:	D.B.
CURRENT/BID DATE:	07/18/05

SHEET CONTENTS

AS101

ADD2

CARTWRIGHT
CONSULTING ENGINEERS

REGIONAL OFFICE

July 21, 2005

Architectural Nexus
135 North Main St.
Logan, Utah 84321

RE: Structural Addenda #1

Project: Workforce Services - Logan, Utah

The following items are changes and/or additions to the structural drawings. This addendum comprises of 11 total pages.

Sheet S101

1. Replace the footing schedule with the attached footing schedule.
2. Change footing at grids F & 1 from FS6.0 to FS6.5.
3. Change footing at grids F & 3 from FW1 to FS7.5.
4. Change footing at grids F & 5.9 from FS5.0 to FS6.0.
5. Change footing at grids F & 6.5 from FS7.0 to FS7.5.
6. Change footing at grids E (approx.) & 5 from FS10 to FS7.5.
7. Change footing at grids D.6 & 7 from FS5.0 to FS5.5.
8. Change footing at grids D.1 & 3.6 from FS4.5 to FS5.5.
9. Change column mark at grids C & 2.5 from CD1 to C1.
10. Change footing at grids C & 7 from FS7.5 to FS8.0.
11. Change footing at grids C & 9 from FS3.5 to FS4.0, top of footing elevation = 98'-0".
12. Change footing at grids B.4 & 9 from FS3.0 FS4.0.
13. Change footing at grids B.2 & 7 from FS6.0 FS6.5, and baseplate from BP1 to BP14.
14. Change footing at grids B & 2 from FS6.0 to FS6.5.
15. Change footing at grids A & 4 from FS6.0 to FS7.0.
16. Change footing at grids A & 8 from FS3.0 to FS3.5.
17. Change footing at grids A & 8.5 and A & 9 from FS3.5 to FS4.0.
18. Change baseplate mark at grids A.8 & 7 from BP1 to BP14.
19. Change baseplate mark at grids B.2 & 7.9 from BP1 to BP14.
20. At various footing callout locations the top of footing elevation mark, shows a foot mark(') where the inches are specified, change mark to inches(").

21. Interior foundation walls at elevator pit located between grids D.4 & D.8 are to be FW2 type with top of wall elevation = 100'-0".

Sheet S301

22. All top of steel callouts are to be above elevation 100'-0".
23. Add keynote 11 as follows, *Provide headed stud anchors (HAS's) on beams along grid 7, see detail 15/S501* (revised detail is attached).
24. Change keynote at grids 4 & B from 3 to 12. Add keynote 12 as follows, *Provide angles above joists/beams as per detail 5/S503* (detail is attached).
25. Change detail callout at grids 4 & B from 10/S501 to 5/S503 (detail is attached).
26. Where 2-story wall section occurs use the following details; detail 1/S502 where steel floor joists are perpendicular to wall, detail 2/S502 where steel floor joists are parallel to wall, and details 3&12/S502 where brick veneer bump outs occur.
27. Change detail callout along grid B & 2.6 and along grid A & 4.9 from 6/S501 to 4/S501.
28. Change detail callout along grid 7 & B.1 from 8/S501 to 4/S503 OPP. (detail is attached).
29. Change detail callout along grid 6.6 & D.7 from 8/S501 to 4/S503 (detail is attached).
30. In floor & roof framing notes, note #7 change SW3 to SW4.
31. In keynotes, keynote #2 change spacing from 6' o.c. to 4'-0" o.c.
32. In keynotes, keynotes #3 and #4 change detail callout from 1/S602 to 1/S503.

Sheet S302

33. Remove splice plate along grid B & 4 and grid B & 5.2, for clarification splice plate along grid 4 & B is to remain.
34. In roof framing notes, note #7 change SW1 to SW4.
35. In keynotes, keynote #2 change spacing from 6' o.c. to 4'-0" o.c.
36. In keynotes, keynote #3 change detail callout from 1/S602 to 1/S503.

Sheet S303

37. Replace cross brace schedule with attached cross brace schedule.
38. Replace shearwall schedule with attached shearwall schedule.

Sheet S304

39. Detail 1 change steel gusset plate note located at bottom left corner from referencing detail 8 & 10/S401 to 8 & 10/S402.
40. Detail 3; provide 1" clear distance from abutting braces to continuous brace.

Sheet S402

41. Detail 1 change gusset plate thickness from ½" to ¾".
42. Omit foundation wall reinforcement callouts, use what is shown in foundation wall schedule.

Sheet S501

43. Details 3 & 6, add detail reference at edge of slab *13/S501 SIM.*
44. Detail 4, omit note *SCREW AT EA. JOIST T&B.*
45. Replace detail 13 with attached detail.
46. Detail 14, note specifying blocking between joists, change detail reference from 8/S404 to 1/501.
47. Replace detail 15 with attached detail.

Sheet S502

48. Detail 12/S502, change section callout from 6/S502 to 3/S502.

Sheet S503

49. Detail 2, change detail title to *Joist Support Detail.*
50. Replace detail 3 with attached detail.
51. Add details 4 & 5 with attached details.

Sheet 601

52. Detail 4, attachment plate attaching the knee wall to the roof metal deck is to be 18 gauge use (2) rows of #8 SDS at 6" o.c.; use (3) #8 SDS to attach knee wall studs to 18 gauge attachment plate.
53. Detail 5, reference detail 4/S601 for knee wall attachment.

Sincerely,
CAC Engineering, Inc.

Ron M. Christensen, P.E.

FOOTING SCHEDULE

MARK	DIMENSION			REINFORCING	
	DEPTH	WIDTH	LENGTH	LONG	SHORT
FC2.0	12"	2'-0"	CONT.	3-#4	#4@18
FS3.0	12"	3'-0"	3'-0"	4- #4	4- #4
FS3.5	12"	3'-6"	3'-6"	5- #4	5- #4
FS4.0	12"	4'-0"	4'-0"	6- #4	6- #4
FS4.5	12"	4'-6"	4'-6"	6-#4	6-#4
FS5.0	12"	5'-0"	5'-0"	7-#4	7-#4
FS5.5	12"	5'-6"	5'-6"	8-#4	8-#4
FS6.0	14"	6'-0"	6'-0"	9-#4	9-#4
FS6.5	14"	6'-6"	6'-6"	11-#4	11-#4
FS7.0	16"	7'-0"	7'-0"	8-#5	8-#5
FS7.5	16"	7'-6"	7'-6"	9-#5	9-#5
FS8.0	18"	8'-0"	8'-0"	10-#5	10-#5
FS8.5	18"	8'-6"	8'-6"	11-#5	11-#5
FS9.0	20'	9'-0"	9'-0'	13#5	13#5
FS9.5	20"	9'-6"	9'-6"	14#5	14#5
FS10.0	22"	10'-0"	10'-0"	15#5	15#5

CROSS BRACE SCHEDULE

MARK	X MEMBER SIZE	DETAIL
CB1	T.S. 4x4x1/4	8/S402 / 10/S402
CB2	T.S. 4x4x3/8	8/S402 / 10/S402
CB3	T.S. 6x6x1/4	8/S402 / 10/S402

BRACED FRAME NOTES

1. See detail 1/S304 for typ. braced frame details

SHEARWALL SCHEDULE

MARK	DESCRIPTION
SW1	**SHEATHING:** 7/16" OSB SHEATHING INSTALLED ON BOTH SIDES OF WALL 6" METAL STUDS @ 16" O.C. MAX. SPACING. - SEE FRAMING NOTES FOR SIZE. **ATTACHMENT:** #8 SCREWS AT 6" O.C. AROUND ALL EDGES AND AT 12" O.C. IN THE FIELD.
SW2	**SHEATHING:** 7/16" OSB SHEATHING INSTALLED ON BOTH SIDES OF WALL 6" METAL STUDS @ 16" O.C. MAX. SPACING. - SEE FRAMING NOTES FOR SIZE. **ATTACHMENT:** #8 SCREWS AT 4" O.C. AROUND ALL EDGES AND AT 12" O.C. IN THE FIELD.
SW3	**SHEATHING:** 7/16" OSB SHEATHING INSTALLED ON BOTH SIDES OF WALL 6" METAL STUDS @ 16" O.C. MAX. SPACING. - SEE FRAMING NOTES FOR SIZE. **ATTACHMENT:** #8 SCREWS AT 2" O.C. AROUND ALL EDGES AND AT 12" O.C. IN THE FIELD.
SW4	**SHEATHING:** 7/16" OSB SHEATHING INSTALLED ON ONE SIDE OF WALL 6" METAL STUDS @ 16" O.C. MAX. SPACING. - SEE FRAMING NOTES FOR SIZE. **ATTACHMENT:** #8 SCREWS AT 6" O.C. AROUND ALL EDGES AND AT 12" O.C. IN THE FIELD.

SHEARWALL NOTES

1. See detail 2/S304 for typ. shearwall framing

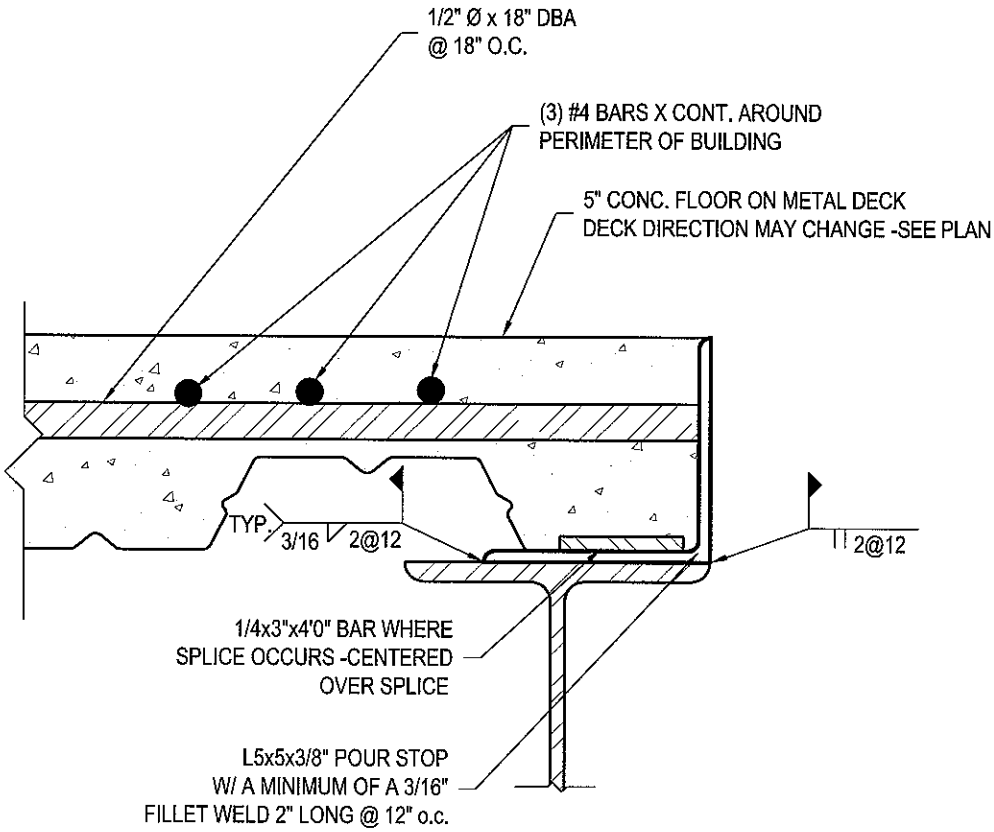

13 ANGLE @ PERIMETER OF DECK

SCALE: 3"=1'-0"

SHEET S501

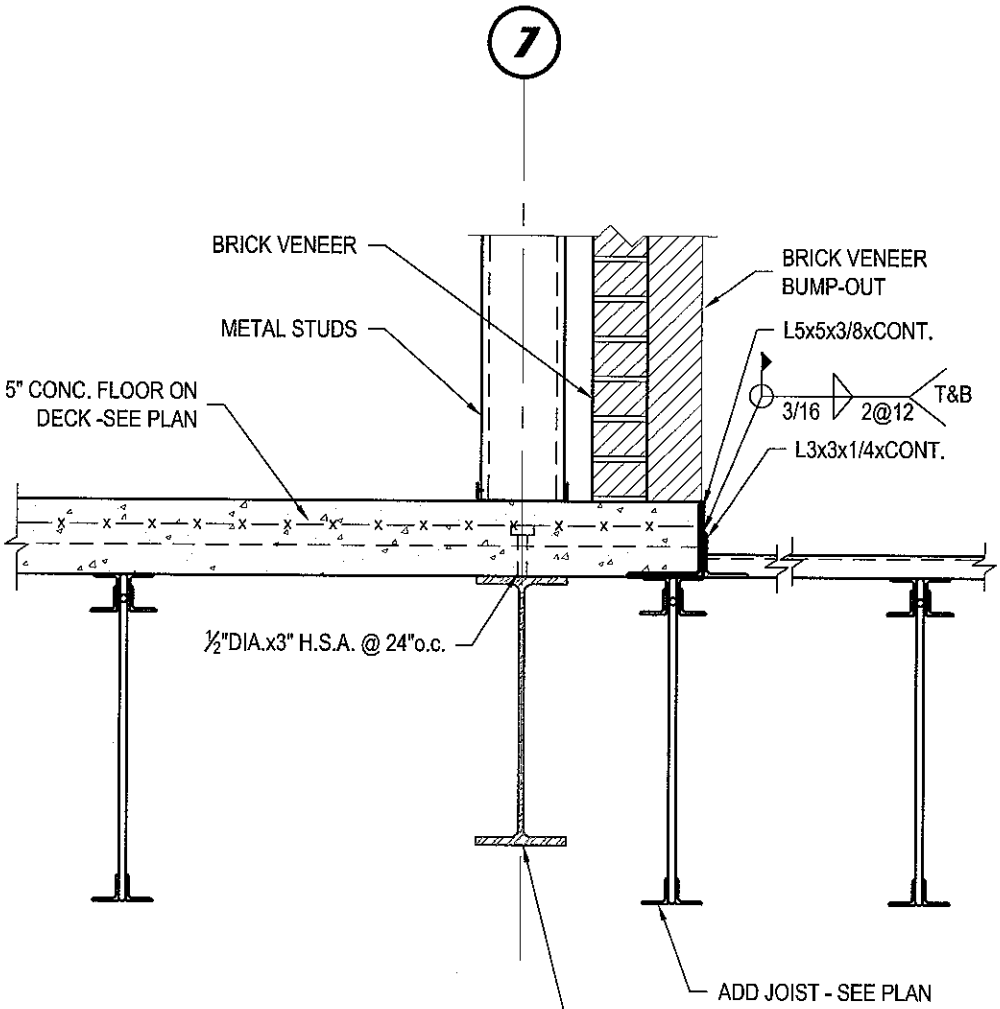

15 **DETAIL**
SCALE: 1"=1'-0"
SHEET S501

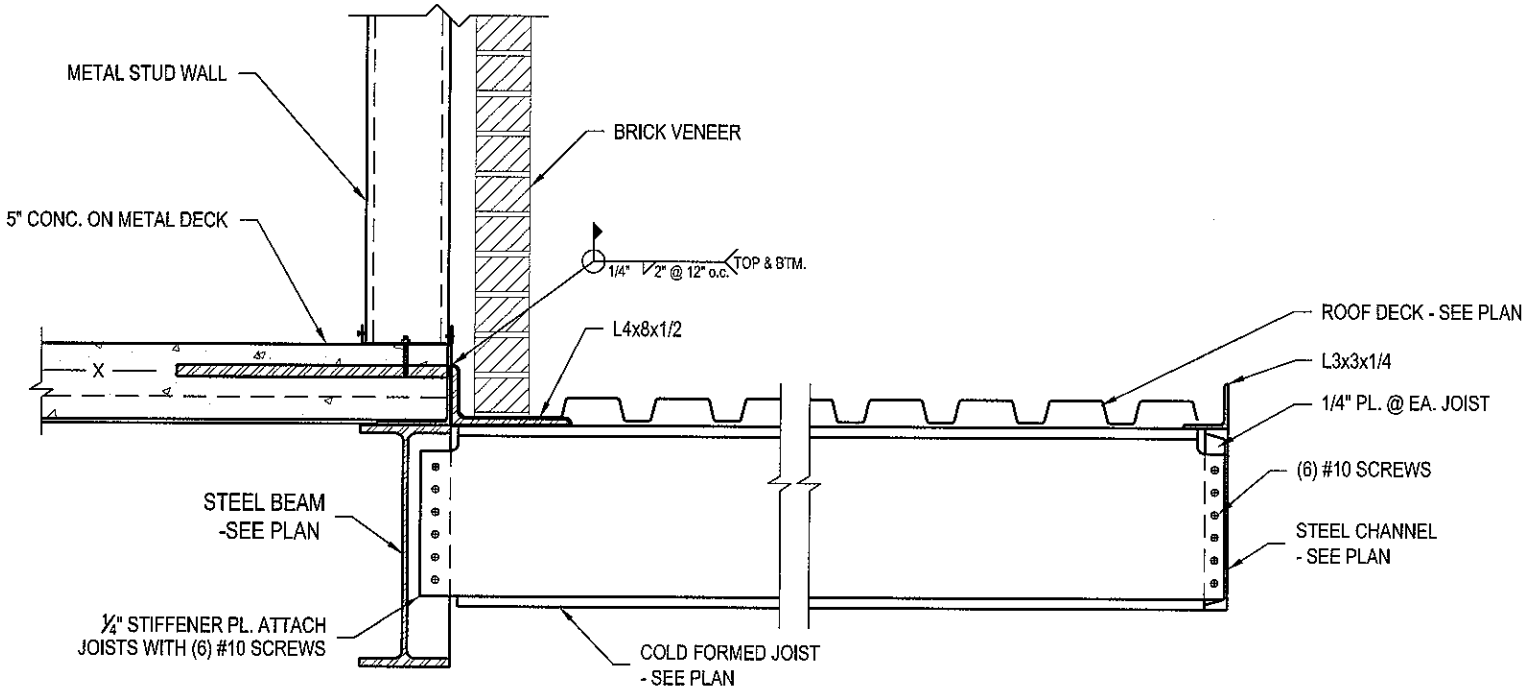

3 CANOPY JOIST CONNECTION DETAIL

SCALE: 1"=1'-0"

SHEET S503

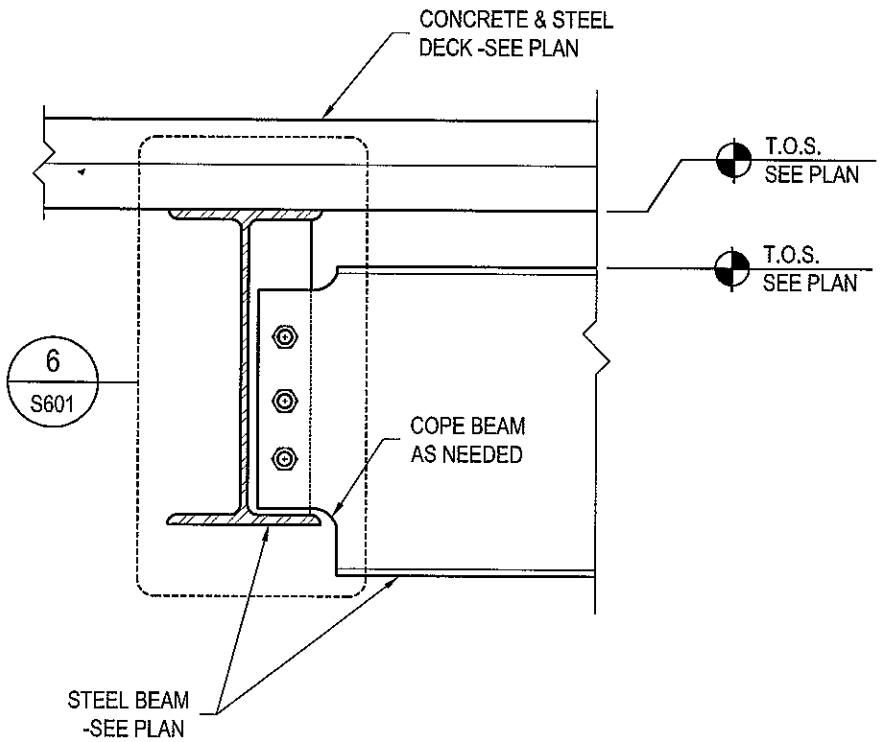

4 TYP. BEAM / BEAM CONN.

SCALE: 1-1/2"=1'-0"

SHEET S503

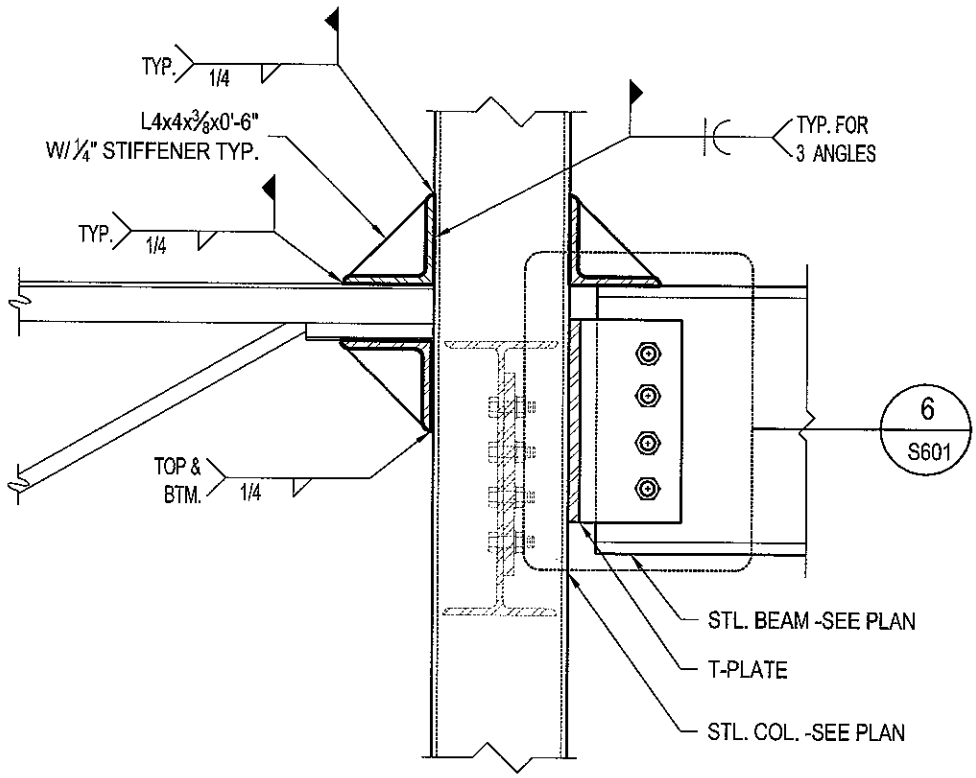

5 TYP. COL./ JOIST / BEAM CONN.

SCALE: 1-1/2"=1'-0"

SHEET S503

Logan, Utah Workforce Services

Mechanical Addenda #1

July 15, 2005

SHEET MH601:

1. Updated Rooftop Unit schedule. See attached.

SHEET P101:

2. Extend ½" CW line off of ¾" line serving wall hydrant and rise up to water cooler on second level (see attached.)

SHEET P401:

3. 6" domestic cold water main entering building should have been labeled 2".

4. Counter lavatories in Men's 0123 & Women's 0124 should be labeled L-2. (Were miss-labeled as L-1.)

SHEET P601:

5. Detail B2: Change 3" PRV station to 2". All piping shown on PRV station shall be 2" with exception to bypass. Bypass shall be 1-½".

6. Add L-2. Counter mounted lavatory. HW, CW, Waste & Vent shall be the same size as L-1. Description shall be counter

SECTION 15410:

7. L-2 Counter Mounted Sink shall be as follows:

   Lavatory (ADA): Kohler K-2195 Pennington self rimming vitreous china oval lavatory with 4" faucet centers; cast brass chrome plated "P" trap (see plans for trap primer connection); Sloan EBF-85 battery operated faucet with infra-red sensor, ADA compliant 2.0 GPM vandal resistant spray head; Provide check valves on hot and cold water inlets.

ROOFTOP PACKAGE AIR CONDITIONING UNIT SCHEDULE (GAS)

SYMBOL	MANUFACTURER & MODEL NO.	CFM	EXT. S.P. (1)	SUPPLY FAN H.P.	NATURAL GAS HEATING MBH		COOLING MBH (2)(3)		MIN. OUTSIDE AIR SETTING	ELECTRICAL		MAX OPERATING WEIGHT	COMMENTS
					INPUT	OUTPUT(1)	SENSIBLE	TOTAL		VOLTS/ PHASE/ CYCLE	MIN. CIRCUIT AMP.		
RTU-1	TRANE (6 TON) YHC072A3RHA	1950	0.75"	1	150	100.1	51.7	61.9	600	208/3/60	43.9	1,600	(1)(2)(3)(4)(5)(6)(7)(8)(9)
RTU-2	TRANE (6 TON) YHC072A3RHA	1980	1.14"	2	150	101.0	52.2	62.2	440	208/3/60	43.9	1,600	(1)(2)(3)(4)(5)(6)(7)(8)(9)
RTU-3	TRANE (5 TON) YHC060A3RHA	1600	1.10"	1	130	86.8	44.6	52.5	420	208/3/60	34.3	1,200	(1)(2)(3)(4)(5)(7)(8)(9)
RTU-4	TRANE (5 TON) YHC060A3RHA	1600	1.15"	1	80	54.3	44.6	52.5	75	208/3/60	34.3	1,200	(1)(2)(3)(4)(5)(7)(8)(9)
RTU-5	TRANE (6 TON) YHC072A3RHA	2150	1.15"	1	150	101.3	54.8	63.3	150	208/3/60	43.9	1,600	(1)(2)(3)(4)(5)(7)(8)(9)
RTU-6	TRANE (5 TON) YHC060A3RHA	1680	1.15"	1	130	86.9	45.9	53.0	45	208/3/60	34.3	1,200	(1)(2)(3)(4)(5)(7)(8)(9)
RTU-7	TRANE (10 TON) YHC120A3RMA	3630	1.15"	3	200	137.2	92.4	100.5	360	208/3/60	57.7	1,900	(1)(2)(3)(4)(5)(6)(7)(8)(9)
RTU-8	TRANE (6 TON) YHC072A3RHA	2290	1.15"	2	150	101.6	56.9	64.1	540	208/3/60	43.9	1,600	(1)(2)(3)(4)(5)(6)(7)(8)(9)
RTU-9	TRANE (6 TON) YHC072A3RHA	1980	1.11"	2	120	100.9	52.2	62.2	255	208/3/60	43.9	1,600	(1)(2)(3)(4)(5)(7)(8)(9)
RTU-10	TRANE (7.5 TON) YHC092A3RMA	2960	1.10"	2	150	102.7	75.0	82.7	225	208/3/60	47.2	1,700	(1)(2)(3)(4)(5)(6)(7)(8)(9)
RTU-11	TRANE (8.5 TON) YHC102A3RMA	3330	1.15"	2	150	103.8	84.7	90.6	255	208/3/60	54.5	1,900	(1)(2)(3)(4)(5)(6)(7)(8)(9)

(1) CAPACITY AT 4800 FT. ELEVATION.
(2) BASED ON 93°F DB, 65°F WB AMBIENT.
(3) BASED ON 52°F DB, 52°F WB LAT.
(4) COMPLETE WITH 100% ECONOMIZER AND 100% CENTRIFUGAL MODULATING POWER EXHAUST AND SINGLE POINT POWER CONNECTION THRU THE ROOF CURB FOR ROOFTOP & ECONOMIZER.
(5) PROVIDE WITH 115 V FACTORY POWERED CONNIVANCE OUTLET.
(6) 2 STAGE GAS BURNER.
(7) UNIT COMPLETE WITH INTEGRAL THERMAL OVERLOAD PROTECTION, STARTER, AND FUSED DISCONNECT.
(8) HEATING BASED ON −20°F DB WINTER AMBIENT.
(9) UNIT COMPLETE WITH SPRING VIBRATION ISOLATION ROOF CURB .
(10) PROVIDE AND INSTALL EZ TRAP MODEL EZT−150 WATERLESS CONDENSATE TRAP FOR PRESSURE BLOW THROUGH SYSTEM.

MH601

1

Addenda
Logan, Utah
Workforce Services
Mechanical
Schedules & Details
7−11−05

SPECTRUM ENGINEERS
40 Cache Valley Blvd., Suite 2
Logan, Utah 84341
435-735-3456
FAX 435-753-3469
www.spdesign.com

Logan, Utah Workforce Services

Mechanical Addenda #2

July 21, 2005

SHEET MH101:

1. Add fire dampers and return air duct to room 120. Re-rout supply ductwork as shown. See attached 1/MH101.

SHEET MH102:

2. Add fire damper to rooms 205 and 206. Change keyed note 3 to 5. See attached 2/MH102.

SECTION 15900:

3.

2.9

Rooftop thermostats shall be an application controller capable of monitoring discharge, air temperature, and fan status.

2.2

Building automation system shall tie into existing system thru Ethernet.

2.1

Remove Johnson Controls and Stafa Controls. Add Invynsis installed by YAMAS.

SECTION 15784:

4.

2.3

K Thermostats shall be as specified in section 15900. Remove: Thermostat: Programmable, electronic; with heating setback and cooling setup with 7-day programming. (Honeywell T-7300)

SHEET P101:

5. Extend ½" CW line off of ¾" line serving wall hydrant and rise up to water cooler on second level (see attached.)

Logan, Utah Workforce Services
Mechanical Addenda #2
July 21, 2005

PRIOR APPROVALS:

Approval of equipment from catalog information indicates brand name and general characteristics are acceptable to the Engineer, but does not relieve the Contractor of the responsibility of providing equipment and accessories as specified unless specific mention of departure from specifications was made in the submittal and acknowledged in writing by the Engineer. Quantities and dimensions are not checked. We are retaining one set of submittal data for our files.

ITEM	BRAND SUBMITTED	COMMENTS
Drainage Products	Milfab	Approved
Packaged rooftop	York International	Not Approved
Grill Registers Diffusers	Metal air	Approved
Exhaust Fans	ILG American Coolaire	Approved
Ductless split system	EMI Inviromaster	Approved
MVD, HETD, Low leakage damper	Air Rite Manufacturing	Approved
Fire/smoke, fire Dampers	C&S by PCI & or Lau industries	Approved
Electric Cabinet Unit Heaters	Qmark	Approved
Manual Volume Dampers	Pottorff	Approved
Spin In Dampers	Clifco	Not Approved
Flex Duct	Hercules	Approved
Water Heater	American Water Heater Co.	Approved
Plumbing Fixtures	System One Operation	Approved
Plumbing traps	Specification Traps & Supplies Operation	Approved

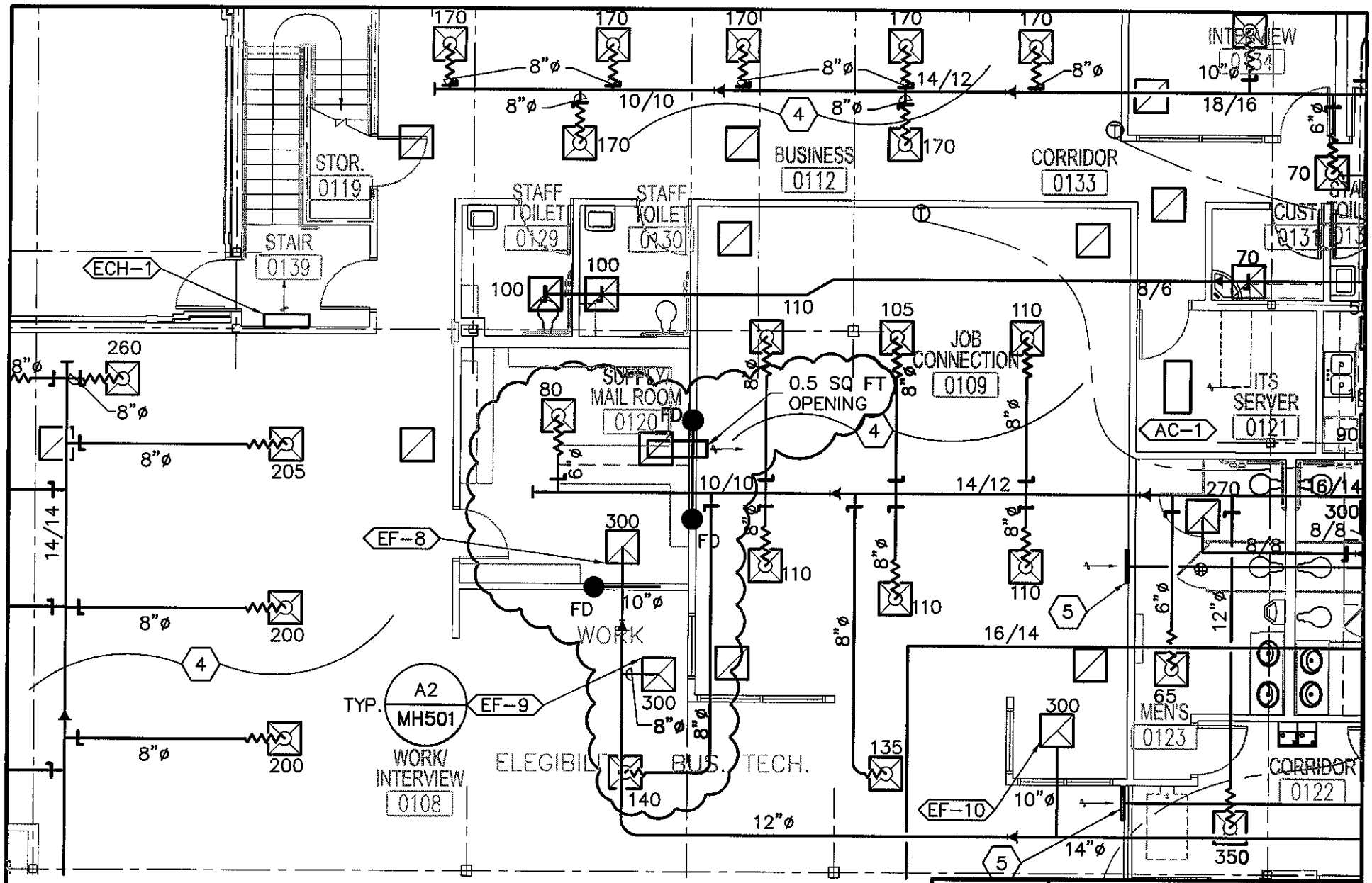

M101

1

Addenda
Logan, Utah
Workforce Services
Main Floor
Mechanical Plan
7/21/05

SPECTRUM ENGINEERS
40 Cache Valley Blvd., Suite 2
Logan, Utah 84341
435-735-3456
FAX 435-753-3469
www.spdesign.com

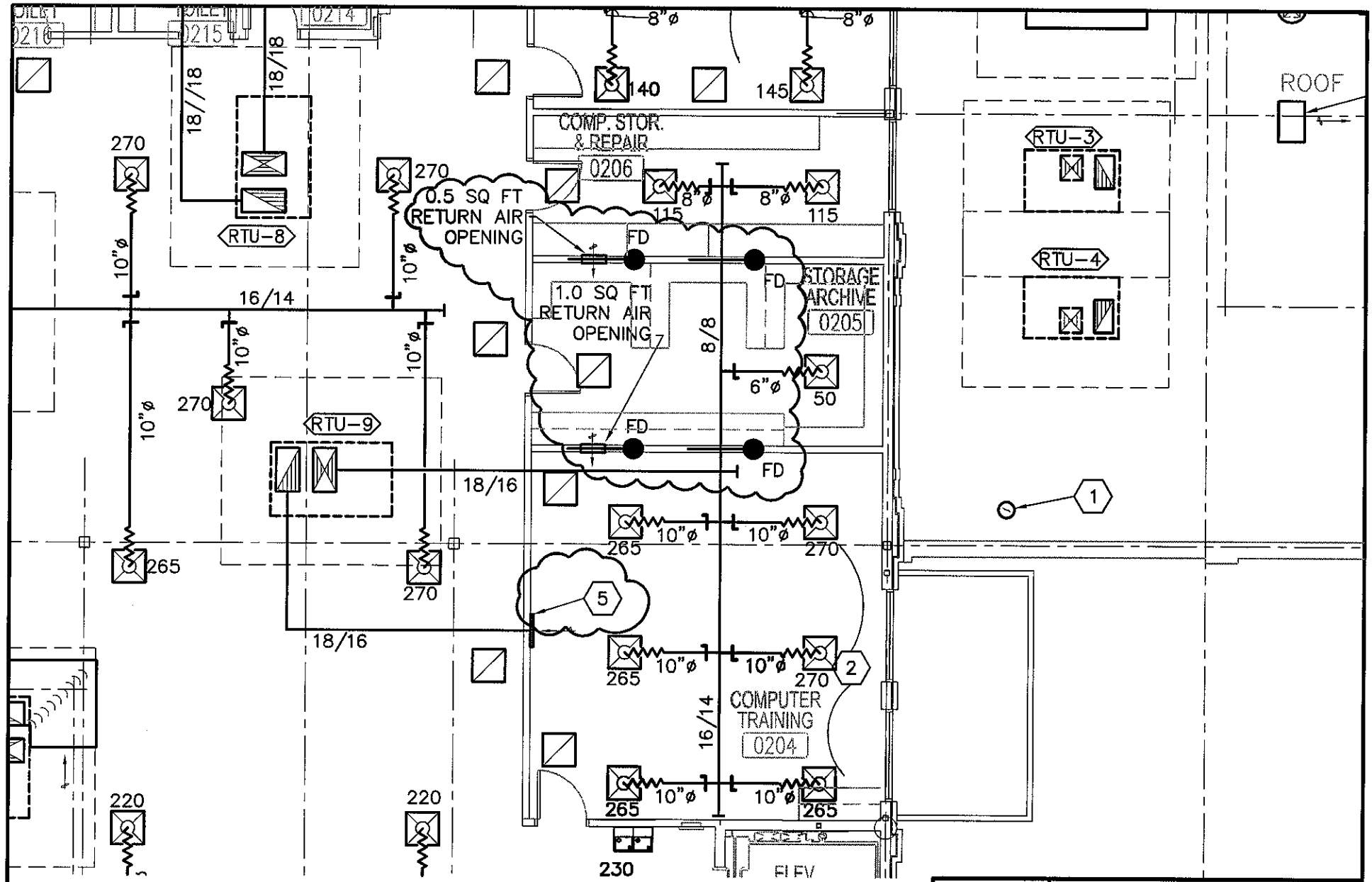

M102	Addenda Logan, Utah Workforce Services Upper Floor Mechanical Plan 7/21/05	SPECTRUM ENGINEERS 40 Cache Valley Blvd., Suite 2 Logan, Utah 84341 435-735-3456 FAX 435-753-3469 www.spdesign.com
2		

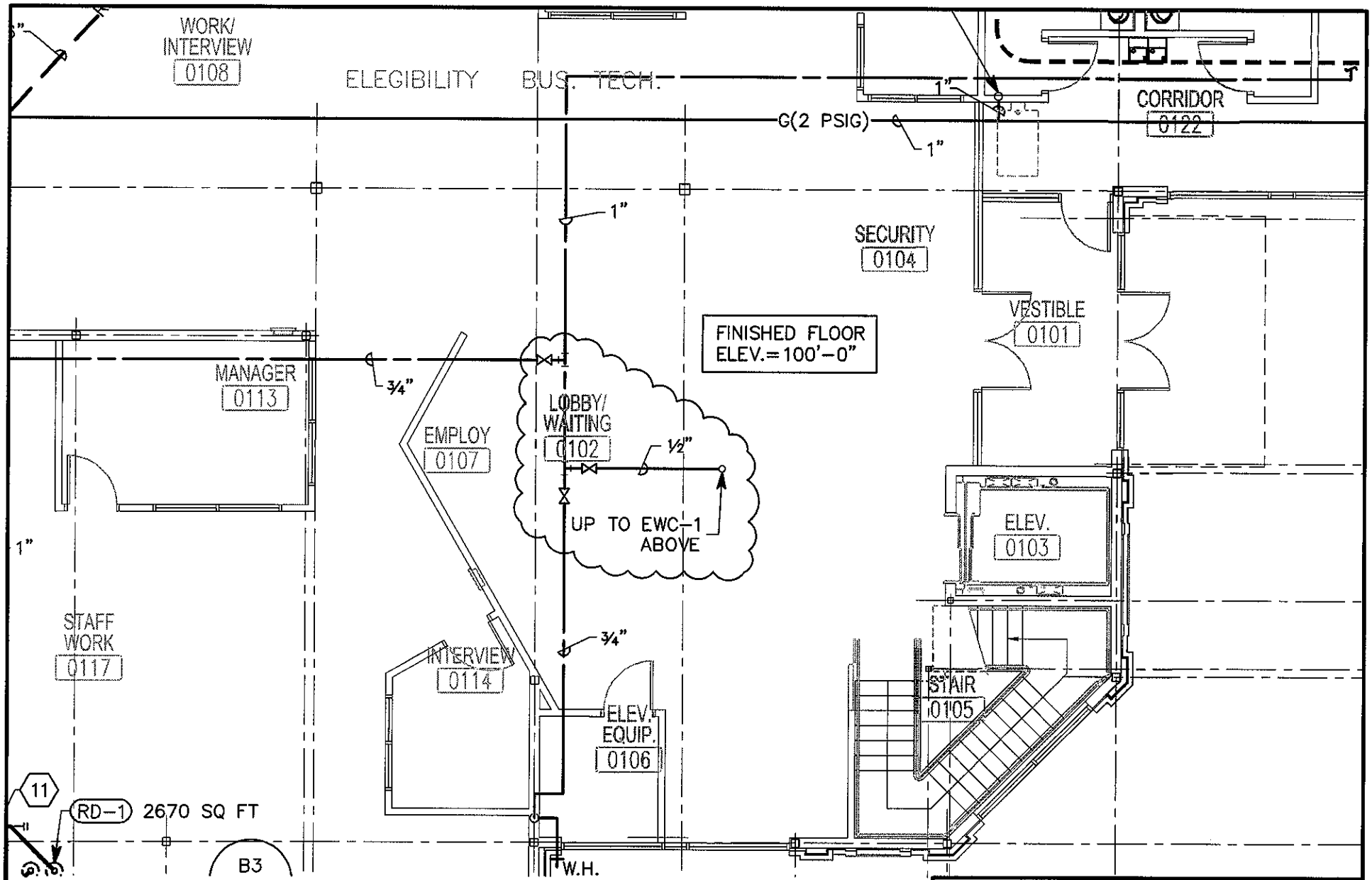

P101

3

Addenda
Logan, Utah
Workforce Services
Main Floor
Mechanical Plan
7/21/05

SPECTRUM ENGINEERS
40 Cache Valley Blvd., Suite 2
Logan, Utah 84341
435-735-3456
FAX 435-753-3469
www.spdesign.com

BEAZER ENGINEERING, LLC
184 NORTH 100 EAST
LOGAN, UTAH 84321
TEL: (435)-753-1250
FAX: (435)-753-1871

ADDENDUM
LOGAN WORKFORCE SERVICES
DIVISION 16
7/22/2005

DRAWINGS

I. SHEET E201: Add T-14B exit sign at intersection of grid C.25 and 4.3. See attached drawing.

II. SHEET E301: Provide 120V power from panel 1P1-24 (20/1 breaker, 2 #12 CU, 1 #12 CU GR, ¾" C) to security system control equipment located in ITS Server 121.

III. SHEET E401:
1. Relocate pull station in Stair 139 into corridor by door entering stair.
2. Provide 4SD j-box +48" AFF on exterior of SW door (grid 2.1-G) for card-reader. Provide ¾" C from j-box to J-box inside door above accessible ceiling. Provide ¾" C from J-box above accessible ceiling into door frame for electric strike. Provide security system cabling to head-end equipment (TAC INET or Win DSX based) located in ITS Server 121. Provide 4-card reader capability with allowance for future expansion (minimum 25 additional readers), intrusion detection (door sensors), and video surveillance (CCTV cameras, DVR, multi-window screen). System shall be capable of interfacing with building LAN, BMS, and fire-alarm system. Provide AWID card readers and 75 access cards. Submit on system and components. Approved vendors are Utah Controls and Yamas Controls.

IV. SHEET E402: Add fire alarm pull station outside entry to Stair 217.

V. SHEET E501:
1. Lighting Fixture Schedule
   A. All linear fluorescent fixtures to be program start.
   B. T-2A: Use 2 by 6 cell louver instead of 18 cell indicated.
   C. T-2C: Use 4 by 6 cell louver instead of 18 cell indicated.
   D. T-2A, T-2B, T-2C, T-2D: Parabolic fixtures are to be 3" deep louver (Columbia P4D series instead of 4524 series).
   E. T-10 Indessa fixture changed to: 409-2CFQ26-(MOD) BRUSHED AL-(MOD) NO CROSSBAR
   F. T-14B: Provide brushed aluminum housing for edge-lit exit signs (instead of white currently specified)
   G. T-16 contractor allowance: $945 including freight (no lamps).
   H. Pre-approved alternates listed below:

	CATALOG NUMBER
T-1	LSI L-A125-232-SD-SSO-UE- PROGSTART
	LITHONIA 2SP8-G-232-A12125-MVOLT-TUBPHP
	DAY-BRITE 2SPG232-FS21-UNV-1/2EBPROGSTART
T-2	LSI L-A125-332-SD-SSO-UE- PROGSTART
	LITHONIA 2SP8-G-332-A12125-MVOLT-TUBPHP
	DAY-BRITE 2SPG332-FS21-UNV-1/2EBPROGSTART
T-2A	LSI N2P-G-12-232-FD-SSO-UE- PROGSTART
	LITHONIA 2PM3N-G-B-232-12LD-MVOLT-TUBPHP
	DAY-BRITE 2P3GS232R-26SL-UNV-1/2EBPROGSTART

T-2B	LSI N2P-G-18-332-FD-SSO-UE- PROGSTART
	LITHONIA 2PM3N-G-B-332-18LD-MVOLT-TUBPHP
	DAY-BRITE 2P3GS332R-36SL-UNV-1/2EBPROGSTART
T-2C	LSI N2P-G-24-432-FD-SSO-UE- PROGSTART
	LITHONIA 2PM3N-G-B-432-24LD-MVOLT-TUBPHP
	DAY-BRITE 2P3GS432R-46SL-UNV-1/2EBPROGSTART
T-2D	LITHONIA 2PM3N-G-B-217G-9LD-MVOLT-TUBPHP
	LSI N2P-G-24-217-FD-SSP-UE-PROGSTART
	DAY-BRITE 2P3GS217-33SL-UNV-1/2EBPROGSTART
T-3A	LUMINATA LMS02-PH-XE-WR-XX-C-F01M-UNV-T8-PROGSTART
	PEERLITE 10CRM7-232-WHR-XX-UNV-R4-PROGSTART-XX-XX-XX-LP835-F1-XX-ACG
	FINELITE S12P-XX-2T8-XC-91W-UNV-AC-FE-PROGSTART
T-3B	LUMINATA LMS03-PH-XE-WR-XX-C-F01M-UNV-T8-PROGSTART
	PEERLITE 10CRM7-332-WHR-XX-UNV-R4-PROGSTART-XX-XX-XX-LP835-F1-XX-ACG
	FINELITE S12P-XX-3T8-XC-91W-UNV-AC-FE-PROGSTART
T-3C	LUMINATA LMP02-PH-XE-WR-4-F01M-UNV-T8-PROGSTART
	PEERLITE CRW7-2EW-WHR-4'-R4-UNV-PROGSTART-XX-XX-XX-LP835
	FINELITE S5WM-4'-2T8-XC-SPEC-UNV-AC-FE
T-4	TRILINEA TRP02-O-TP2-PB-F01M-UNV-T8-PROGSTART-DAMP
	PRUDENTIAL WAL6-2T8-XX-SPL-TMW-D9-XX-UNV-WM-PROGSTART-DAMP
	FINELITE S10WM-PLV-XX-2T8-XC-STO-UNV-MB-FE-DAMP-PROGSTART
T-5	LSI TSW11-232-SSO-UE-PROGSTART
	LITHONIA AW-232-UNV-TUBPHP
	DAY-BRITE DWN232-UNV-1/2EB-PROGSTART
T-6	LSI S-232-SSO-UE- PROGSTART
	LITHONIA C-232-MVOLT-TUBPHP
	DAY-BRITE T232-UNV-1/2EB-PROGSTART
T-7	LSI SL-132-SSO-RS-UE- PROGSTART
	LITHONIA 2UC-132-MVOLT-TUBPHP-SWR
	DAY-BRITE 8UC132-W-UNV-1/1-EB-LPT835-RS-PROGSTART
T-8A	LSI STG-132-48"-SSO-UE- PROGSTART
	LITHONIA SS-132-MVOLT-TUBPHP
	DAY-BRITE SSR132-UNV-1/1EB-PROGSTART
T-8B	LSI STG-117-24"-SSO-UE- PROGSTART
	LITHONIA SS-117-MVOLT-TUBPHP
	DAY-BRITE SSR-117-UNV-1/1EB-PROGSTART
T-9A	MANNING DP852-36"-BA-(MOD)6CFQ26-SV-QAD
	LAM LDL29-(MOD) 626CFL-1/382D-A-N-RB-36OAH-BA-UNV-ALB
T-9B	MANNING DP850-18"-BA-4FQ26-SV-QAD
	LAM LDL20-4/26-1/282D-A-RB-18OAH-BA-UNV-ALB
T-10	G LIGHTING G60030-D-F-P-(MOD)-LESS CROSSBARS

	ECLIPSE ME-XL-226-EBU-EB-BA-CR (NO BARS)
	TERON LNDS-F226Q-12/277E-WGL-BA-35K-MOD (NO BARS)
T-11A	INFINITY PH60-126Q-EB-CS-120/277
	LITHONIA LF6-226Q-MVOLT-F602AZ
	OMEGA S61H26QPLU-T61HCS
T-11B	INFINITY PH60-226Q-EB-CS-120/277
	LITHONIA LF8-2/26Q-MVOLT-GEB10-F802AZ
	OMEGAS62H26QPLU-T62HCS
T-11C	INFINITY PH60-126Q-EB-WW-120/277
	LITHONIA LF6-226Q-MVOLT-F6W1AZ
	OMEGA S61H26QPLU-76WWCS
T-12	INFINITY DR75-120-BC-120
	LITHONIA APR-PAR38-6MB
	OMEGA OM6250PAR38RADJ45-BLK
T-13	INFINITY MHDR75-150-EB-CS-120/277
	LITHONIA DPH-P38-150M-8-AC-T30-LD-MTB
	OMEGA OM8150PAR38LMH-CS-120/277EB
T-14A	EXITRONIX G-VEX-U-BP-WB-WH-G2
	LITHONIA LQM-S-W-3-G-120/277-EL-N-SD
	MCPHILBEN CXXL-3-G-W
T-14B	EXITRONIX 90*-*-WB-GC-*-BA-AT
	LITHONIA LRP-*-GC/GMR-*-120/277-EL N SD-*
	MCPHILBEN ER45VL-*-*-G*-*
T-14C	LIGHTGUARD L96000-2-CM
	LITHONIA APPROVED
	HIGH-LITES PCF-84-1T-NORMALLY OFF
T-15	ARK AW21-200
	RIG-A-LITE 003-CYX-SM
	NRL ACE-V-15I-1-GC-G-W2
T-19	WINONA PI-83-UB-L2-BRS-F0-SH0-C3-B3-0-STD
	HYDREL 4709-P38-150I-120-FL-SSB-GS-BZ
	BRONZELITE TLB8150PAR38-F-UNV-ABH1751

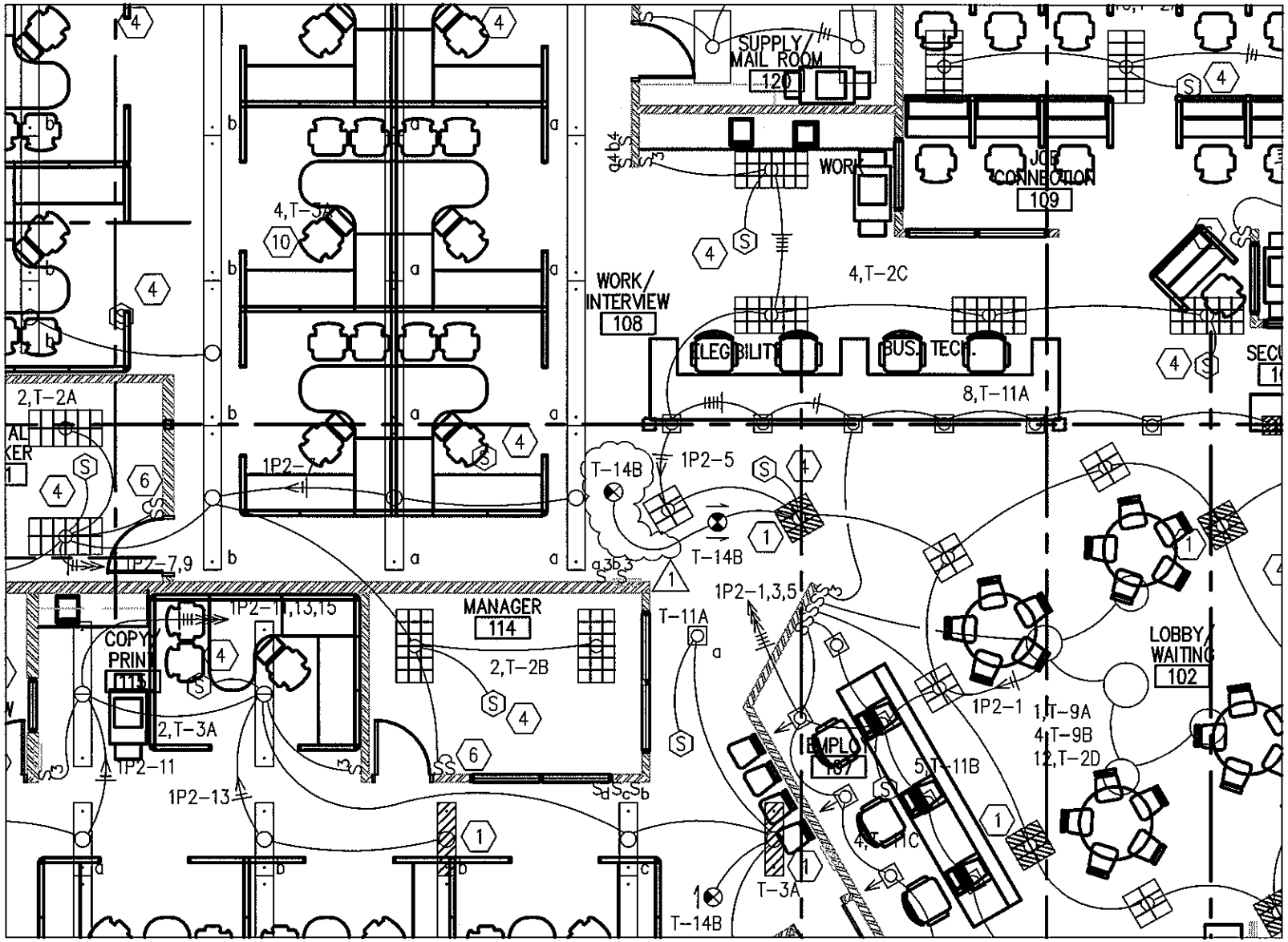

LOGAN, UTAH
WORK FORCE SERVICES

E201