FUNCTIONAL MOCKUP

DESIGN, PREPARATION, AND TESTING GUIDE FOR THE DFCM'S HIGH PERFORMANCE BUILDING STANDARD PROJECTS

Prepared for:

Division of Facilities Construction and Management (DFCM), State of Utah
John Burningham, Energy Program Director
4110 State Office Building
450 North State Street
Salt Lake City, Utah 84114
801-538-3018

Prepared by:

Intertek
Intertek Building & Construction
2500 South Decker Lake Boulevard
Suite 23A
West Valley City, UT 84119

September 2, 2016

Introduction

The functional mockup is a critical part of the overall building enclosure functional performance testing plan for any project as required by DFCM's High Performance Building Standard (HPBS). This document provides an overview of the design, preparation, and testing of the mockup.

This document is divided into the following:

- Why Test the Mockup
- Types of Functional Mockups
- Preferred Mockup Condition
- Requirements for Testing
- Testing the Mockup
- Mockup Preparation and Testing Checklist
- Testing Resolution

Figure 1: Typical stand-alone fully enclosed mockup.

Why Test the Mockup

Mockup design, construction, evaluation, and testing are critical steps in creating a fully functional enclosure. Functional mockups have become an industry standard to assess the performance of design elements, components, systems, and interactions between products for compliance to the owner's performance requirements (OPR), basis of design (BOD), and contract documents. Additionally, mockups are used to confirm sequencing of work, verify product selection with regard to installation ability and compatibility with adjacent products, set performance benchmarks, and allow potential conflicts with design or constructability to be resolved early.

Mockup testing provides critical feedback to help ensure the project meets overall whole building leakage requirements. Meeting building enclosure leakage requirements as shown in the DFCM Infiltration Study, August 15, 2013, to significantly reduce the projects annual energy consumption, reduce HVAC equipment sizes, improve HVAC performance as well as improving the thermal comfort of the occupants.

The mockup should representative of the project. The products installed on the mockup must be the same as those that will be installed on the building, and installed utilizing the same techniques. Additionally, the subcontractor personnel who will be responsible for the supervision and installation on the building must be the same as for the mockup, and be present for the functional performance testing.

The mockup must pass functional performance testing prior to installation of building enclosure components on the building.

Types of Functional Mockups

Two functional mockups types are detailed here: stand-alone fully enclosed and open wall in-situ. Mockups are typically built on-site.

- **Stand-alone fully enclosed mockup**
  A fully enclosed structure. Commonly built on a 3 ½" concrete slab with metal stud walls, sheathing, and air barrier. The roof is typically a sheathed deck with vapor barrier and roof membrane. The mockup includes typical wall to roof conditions

such as a parapet and/or overhang with soffit. Includes 2-3 window systems (minimum window size of 3' by 3') and entry. Minimum overall size of 8' by 8' by 8' is preferred. High testing capacity as all systems and interfaces are represented.

Typically, stand-alone fully enclosed mockups are leveraged on project over $10 million and are required to meet a performance level of 0.10 cfm/ft^2 @ 75 Pa. Consult DFCM's Energy Program Director to establish the functional performance level at the beginning of each project's design phase.

- **Open wall In-situ mockup**
  An in-situ mockup is a section of the building that is completed early to create testable locations. Commonly includes metal studs, sheathing, and air barrier constructed on the building foundation. The in-situ mockup should be a continuous section including at least 2 window systems and be complete at least 8' out from the outside window systems. Low testing capacity due to building conditions, such as roof interface, soffits, and corner conditions, not grouped effectively.

  Typically, open wall In-situ mockups are leveraged on project under $10 million and are required to meet a performance level of 0.25 cfm/ft^2 @ 75 Pa. Consult DFCM's Energy Program Director to establish the functional performance level at the beginning of each project's design phase.

Figure 2: Typical open wall in-situ mockup.

Mockup Design

To ensure the mockup type meets the intent of evaluating performance and functionality, the design drawing must include mockup drawings and associated specifications. The focus should be to design a small, effectively utilized mockup rather than a large and expensive structure (see Preferred Mockup Condition).

The mockup design must be reviewed by the building enclosure commissioning agent.

Preferred Mockup Condition

Testing agents require access to all elevations of the mockup, even those elevations without window systems. An area at least 20' around the mockup should

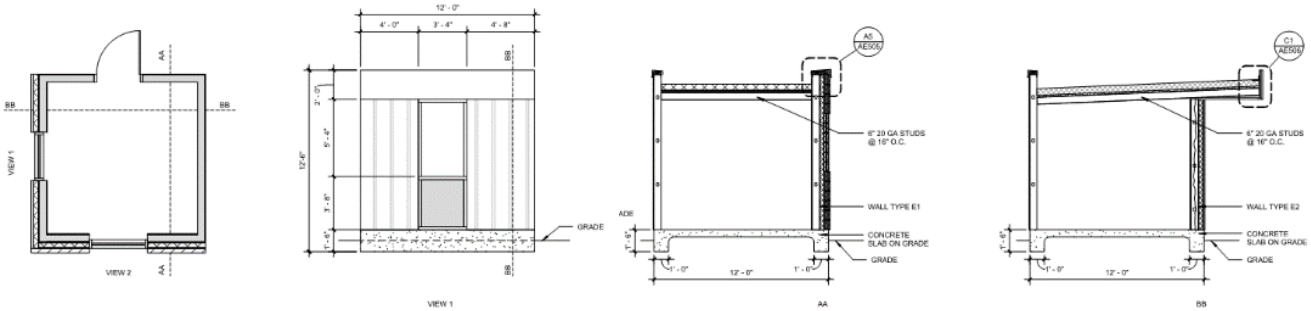

Figure 3: Typical stand-alone fully enclosed mockup interior.

be clear, level, and firm. Do not use the area around or inside the mockup for storage, or relocate stored items prior to the test. Ensure the location of the mockup will direct water away from the mockup as extraneous water could result in a failure. Position the mockup in a semi-permanent location, as failed mockup remediation and retesting may take longer than expected.

The mockup should be constructed on a concrete slab which simulates the typical slab or top of foundation detail. Representative footings and foundations are not necessary. The mockup must include each type of vertical and horizontal waterproofing system, including the interface with the roof vapor barrier and membrane, and the slab-to-wall interface. The mockup should accurately represent building corner conditions and soffit conditions. Construct the mockup with no less than 100 ft^2 of opaque wall.

At the time of testing the mockup should be "naked" with no exterior insulation or cladding. Additionally, no interior insulation, gypsum wall board, or finishes should be installed. These materials inhibit the ability to locate failure locations and may only be installed after the mockup has met all function performance criteria.

The mockup should include representative wall penetrations, such as drain and conduit penetrations (interior piping is not required). Multiple samples of masonry anchors, z-girts, and other cladding attachments should be installed, separated by at least 12" and, in the case of z-girts and similar materials, reduced to 8" long strips so they will fit entirely within an air exfiltration testing dome. Include a section of brick ledger with accurate waterproofing detail. Scuppers, if part of the building design, should be included on the mockup, roof drains are not required.

The mockup should include typical samples of glazing system assemblies. Glazing systems should be complete, with the exception of interior or cosmetic sealant joints. All glazing system assemblies should be representative of the building installation, including manufacturer, series, mullion depth, gaskets, and sealant. Glass should be the correct size and thickness. Mockup windows should be no smaller than 3' by 3'. Mockups typically include 2-3 window systems.

A stand-alone fully enclosed mockup should be constructed airtight with the exception of the entry, which will be sealed by the testing agent. The entry must be at least 24" wide and is commonly an exterior door frame sealed to the air barrier.

Valuable information can also be gained from simulating enclosure related damage and repair scenarios. Common scenarios include sealing penetrations from relocated brick ties, patched sheathing damage after installation of air barrier, window flashing corner wear and repair, and cracked concrete under a widow system that has been sealed.

Requirements for Testing

Mockup testing can be time consuming and effort should be made to reduce the time commitment of attending observers by having these requirements prepared before the arrival of the testing agent.

Air infiltration and exfiltration testing (ASTM E783 and E1186) requires a contractor supplied standard 110 volt power supply within 100' of the mockup. The mockup exterior must be dry.

Static water penetration testing (ASTM E1105) requires a contractor supplied water source within 300' of the mockup capable of delivering 5 gph/ft^2 with standard garden hose connection. Additionally, a standard 110 volt power supply within 100' of the mockup is required. The mockup interior must be dry.

Dynamic water penetration testing (AAMA 501.1) requires a contractor supplied water source within 300' of the mockup capable of delivering 5 gph/ft^2 with standard garden hose connection. Additionally, a rough terrain forklift and operator is required to lift and maintain position of the testing equipment (2900 lbs). The mockup interior must be dry.

If the mockup is constructed with window systems located higher than 10' above grade, lifts and/or scaffolding are required to provide full access to the interior and exterior of the window system.

The contractor must be aware of the functional performance test criteria. These criteria are typically located in specification section 019116 or 019117 – Building Enclosure Functional Performance Testing, 011400 – Quality Requirements, or the specification sections associated with the assembly being tested. The testing agent will verify the criteria before conducting the testing.

Figure 4: ASTM E1105 static water penetration testing.

Testing the Mockup

When construction of the mockup is complete the contractor should coordinate with the testing agent to schedule the testing. The contractor is responsible for notifying the associated trades, architect, owner's representative, and DFCM Energy Program Director of the test date.

Every effort should be made to ensure the mockup is complete prior to the day of testing. The DFCM covers a single day of mockup testing and incomplete mockups cannot be fully tested, which reduces the value of the mockup and potentially pushing re-testing costs to the general contractor.

The mockup must be successfully tested prior to installation of building enclosure components on the building.

A typical mockup test begins with testing agents arriving on site to prepare the mockup for testing. The condition of the mockup will be inspected for deficiencies. If deficiencies are observed which may impact the performance of the mockup they will be brought to the attention of the contractor for remediation. Many deficiencies can be remediated immedi-

ately, while others may result in a delay of the mockup testing.

The testing agent will verify the required tests and functional performance test criteria. Where conflictions in the test requirements occur, specification section 019116 or 019117 – Building Enclosure Functional Performance Testing, if provided during the building envelope commissioning process, overrides other sections.

Who should attend the mockup test?

Per the State's High Performance Building Standard, the mockup test should be attended by the general contractor and representatives from every trade responsible for installation of building enclosure materials and systems. This includes personnel representing the air barrier, glazing, caulking, masonry, metal panel, and roofing subcontractors. Additionally, a representative of the architectural firm should be present as mockup testing often leads to discussion of installed systems and details.

The mockup will be initially prepared for air infiltration and air exfiltration testing. Air infiltration testing measures the rate of air leakage (CFM/ft^2) moving through the mockup enclosure and the window systems. Once the air infiltration testing is complete the air exfiltration testing will be performed. Air exfiltration testing attempts to move air or supplied smoke through the systems, providing a visual guide to the locations of air leakage.

- **ASTM E783-02, *Field Measurement of Air Leakage Through Installed Exterior Windows and Doors.***
  Air infiltration tests are performed using a testing chamber sealed to the window system or entry of the mockup. The windows systems are isolated utilizing plastic sheeting (tare bags). Air infiltration tests are conducted on the window systems by determining the leakage rate difference with the tare bag and after the tare bag is removed. On a fully enclosed mockup the air leakage rate of the air barrier, roof membrane, and interfaces can also be determined.

- **ASTM E1186, *Standard Practices for Air Leakage Site Detection in Building Envelopes and Air Barrier Systems - Practice 4.2.6 chamber depressurization (or pressurization) and smoke tracers (mock-up).***
  Air exfiltration (smoke) tests are performed using a testing chamber sealed to the window system or entry of the mockup. Smoke is supplied to the chamber to locate areas of air/smoke leakage. The exterior is inspected for visible locations of smoke exfiltration.

- **ASTM E1186, *Standard Practices for Air Leakage Site Detection in Building Envelopes and Air Barrier Systems - Practice 4.2.7 chamber depressurization in conjunction with leak detection liquids (acrylic dome).***
  Air exfiltration tests are performed using a 16" portable depressurized acrylic dome and a topically applied surfactant. The surfactant leak detection liquid is applied to penetrations in the air barrier, such as screws, brick ties, or girts. Pathways for air in the membrane create bubbles in the surfactant when under acrylic dome depressurization.

- **ASTM D4541, *Standard Test Method for Pull-Off Strength of Coatings Using Portable Adhesion Testers.***
  Adhesion tests are performed using a portable fixed alignment adhesion tester with a 4" diameter circular loading disc. The disc is secured to the air barrier membrane or flashing with an epoxy adhesive and left to cure. An increasing pulling force is introduced to the specimen until failure was observed. This is a destructive test.

With the air infiltration and exfiltration tests complete the mockup is prepared for the water penetration testing. Testing is performed as static water penetration or dynamic water penetration. Static water penetration testing utilizes a constant interior negative pressure and delivers water with an erected spray rack. Dynamic water penetration testing utilizes a wind generating device, creating exterior positive pressure, and delivers water with an integrated spray rack.

- **ASTM E1105, *Standard Test Method for Field Determination of Water Penetration of Installed Exterior Windows, Skylights, Doors, and Curtain Walls, by Uniform or Cyclic Static Air Pressure Difference.***
  Static water penetration tests are performed using a testing chamber sealed to the window system or entry of the mockup. Water is supplied to the exterior face of the window system utilizing a spray rack delivering 5 gph/ft^2 (gallons per hour per square foot). During testing, the interior face of the test area is inspected for water leakage. The test duration is 15 minutes.

Figure 5: AAMA 501.1 dynamic water penetration testing.

- **AAMA 501.1, *Standard Test Method for Water Penetration of Windows, Curtain Walls, and Doors using Dynamic Pressure.***
  Dynamic water penetration tests are performed utilizing a wind generator employing an 84" diameter propeller. The wind generator is a caged gasoline engine with attached propeller mounted on a steel platform that must be positioned with a rough terrain forklift capable of handling 2900 lbs. Water is supplied to the exterior face of the window system utilizing an integrated spray rack delivering 5 gph/ft^2 (gallons per hour per square foot). During testing, the interior face of the test area is inspected for water leakage. The test duration is 15 minutes.

Mockup Testing Duration

Mockup testing is a combination of preparation, testing, and discussion. For a mockup with 2-3 glazing systems expect preparation to take between 2-3 hours and testing to take between 3-4 hours. The general contractor should be available during the entire process, while attendees are only required for the testing and discussion.

With testing completed, testing agents discuss the results with the general contractor and other observers. Methods of remediating failures should be decided by the project team with input from the testing agents. Remediation and re-testing should occur as quickly as possible as delays could slow the project construction schedule. A full report of the mockup test is issued to the client within 1-2 weeks of the test date.

Field Testing Versus Laboratory Testing Standards

Specifications sometimes require field testing in accordance with ASTM E283 or ASTM E331. These test standards refer to a laboratory test where the test specimen is constructed at an off-site testing facility and affixed to a testing apparatus, and is not appropriate for on-site field testing. The field test standard equivalents are ASTM E783 and ASTM E1105.

Testing Resolution

If the mockup did not meet the performance requirements the failed products, assemblies, or systems should be repaired or corrected. Once remediation is complete the failed components will be retested. This process will continue until all tests have passed.

The mockup must be successfully tested prior to installation of building enclosure components on the building. If the construction team proceeds to install the building enclosure components before the components have passed the required tests they are in risk of installing those components incorrectly. These components will have to be removed and re-installed correctly. Additionally, incorrectly installed systems significantly increase the risk of failing the overall whole building leakage testing, resulting in remediation during building occupancy at the expense of the general contractor.

If the mockup met all of the performance requirements, the mockup passed. But mockup testing is more than numbers and the results should be viewed in the larger framework of the project to attain any additional information possible. For example, air infiltration testing for the enclosure resulted in a pass, but close to the maximum allowable, and injecting smoke into the mockup showed that the majority of the leakage occurred at the roof-to-wall interface. This result should still involve a discussion about mitigating air leakage risk.