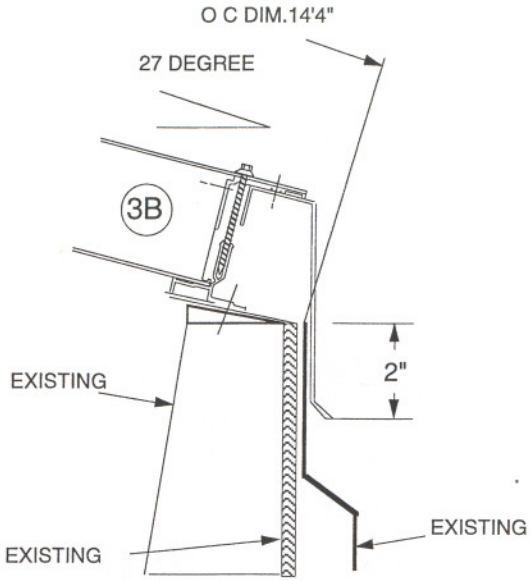

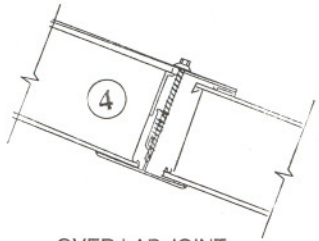

OVER LAP JOINT

GENERAL NOTES

1. Panels
   - A. Thickness 2 3/4
   - B. Exterior Face CRYSTAL
   - C. Interior Face CRYSTAL
   - D. Grid 12'-24" SHOJI
   - E. "U" Factor .5
   - F. Light Transmission 20%
   - G. Color Inserts
   - H. Panel Width & Height Tolerances = ±3/32"
2. Windows
   - A. Type
   - B. Glazing By
   - C. Glazing Material
   - D. Hardware
   - E. Aluminum Screens
   - F. Special
3. Closure System
   - A. Exterior Interior Fastened
   - B.
4. Skylight/Skyroof
   - A. Recommended Minimum Pitch of
   - B. Design Live Load
   - C. Perimeter Corners Factory Mitered & Welded
   - D. Perimeter Factory Assembled to Panels
5. Finish for Exposed Aluminum
   - A. ( ) Mill
   - B. (XX) Corrosion Resistant SELET COLOR
6. Special Materials
   - A.
   - B.

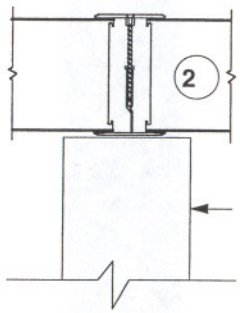

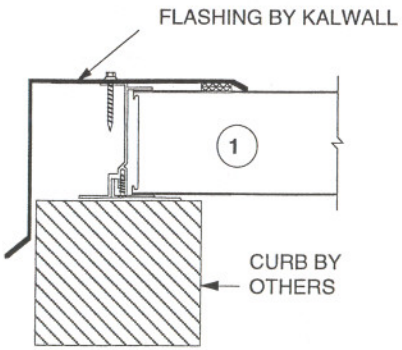

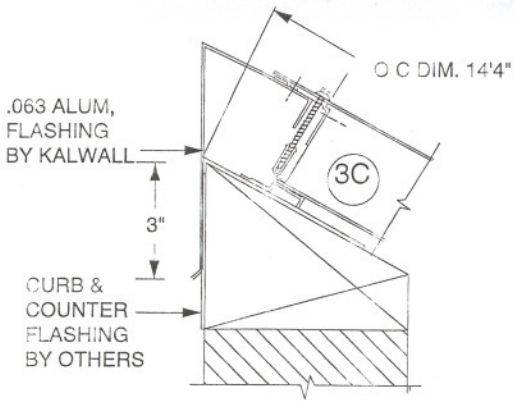

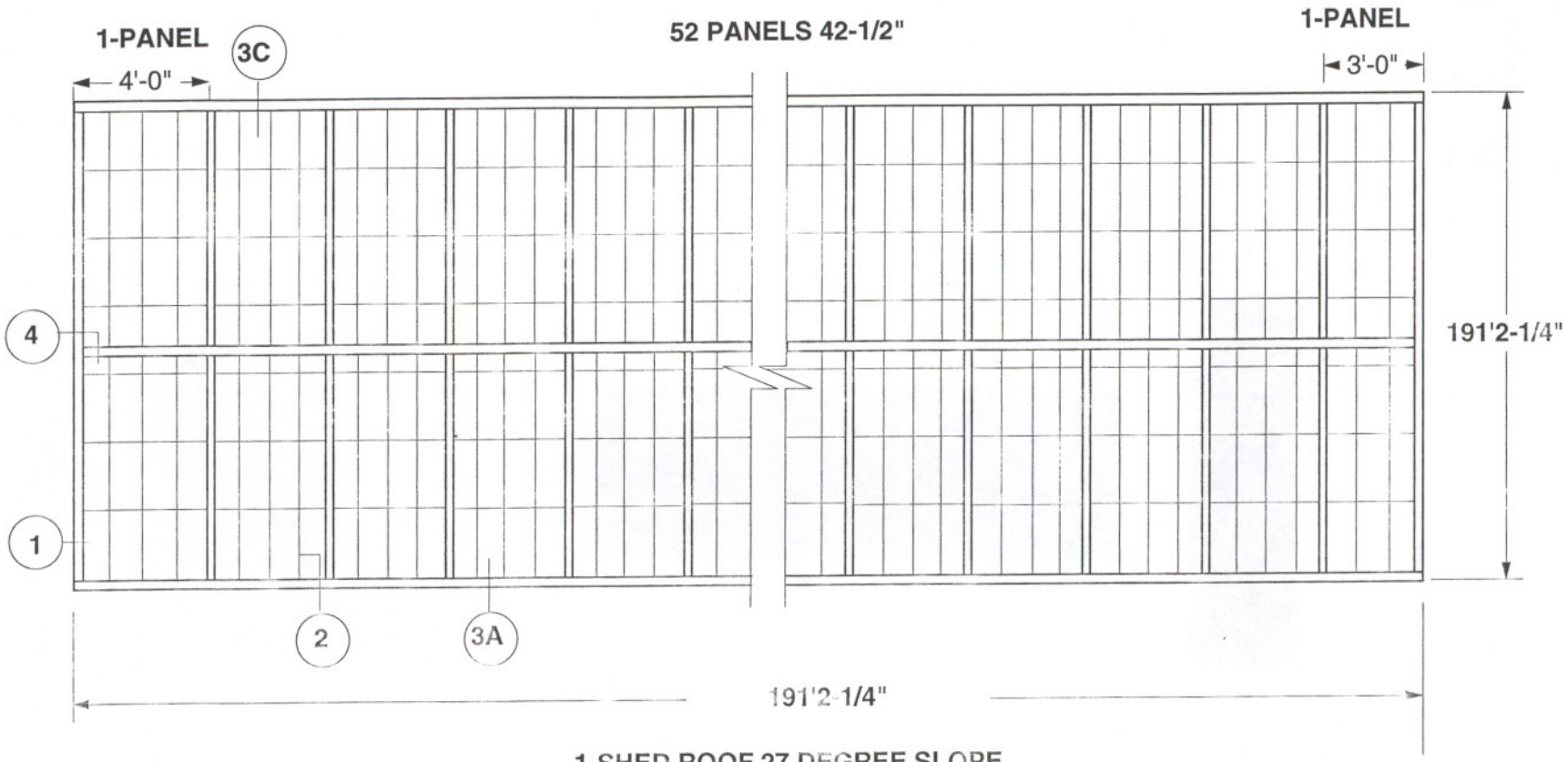

1-SHED ROOF 27 DEGREE SLOPE
SUPPORTED AT EACH BATTEN

ROOF PLAN