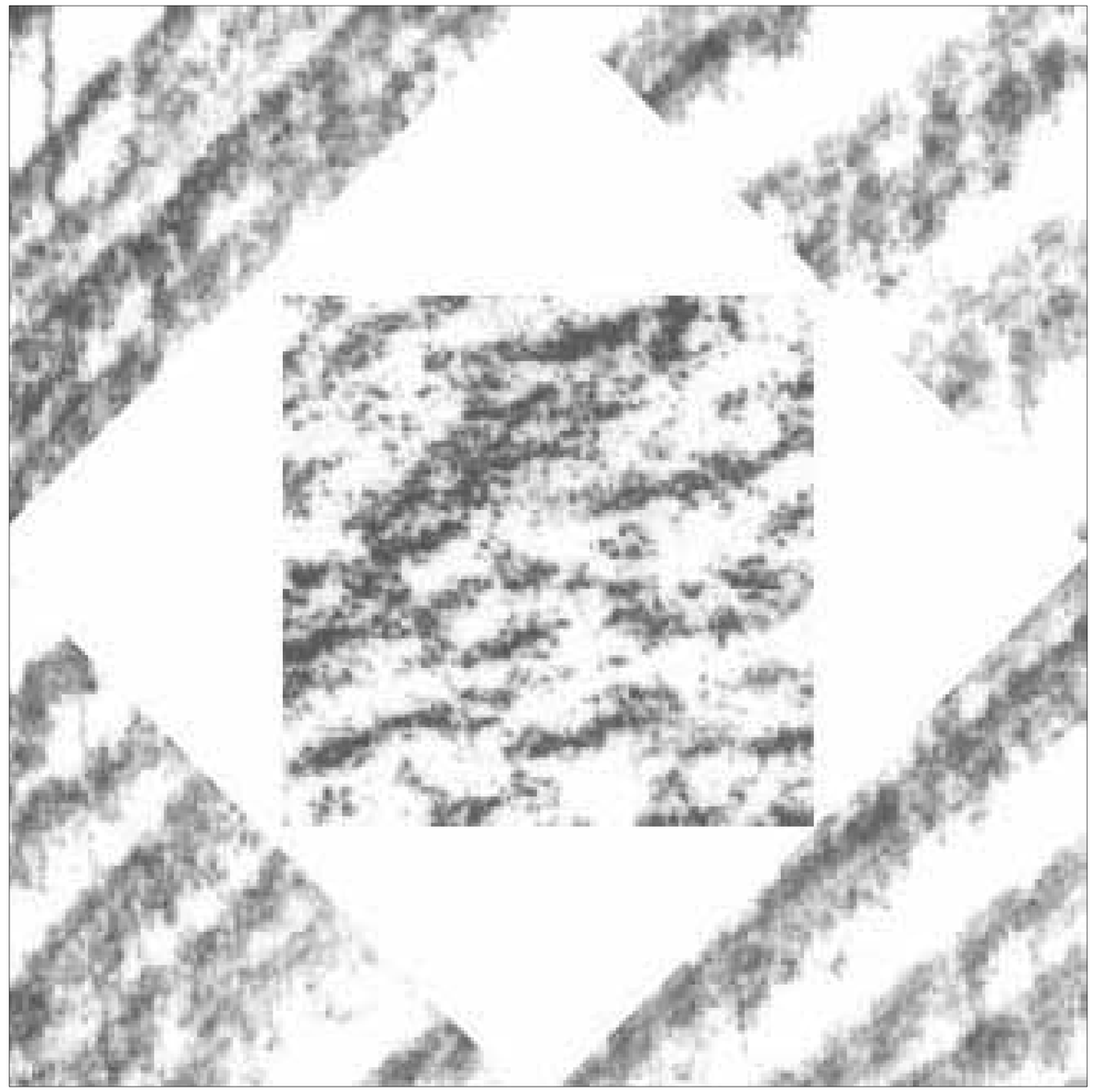

STORES & RECEIVING BUILDING EXPANSION / RENOVATION

Weber State University

State of Utah–Department of Administrative Services

DIVISION OF FACILITIES CONSTRUCTION AND MANAGEMENT

4110 State Office Building/Salt Lake City, Utah 84114/538-3018

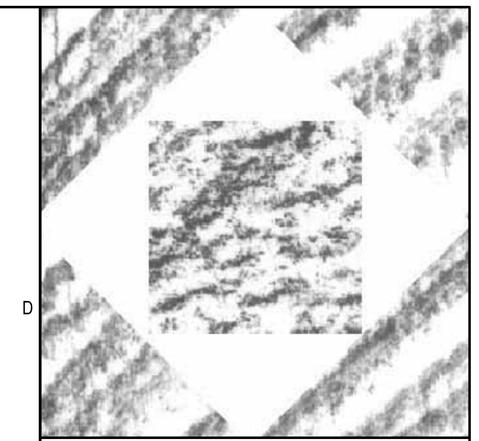

HFSArchitects

ARCHITECTURE
INTERIORS
PLANNING

1484 South State Street
Salt Lake City, Utah 84115
801-596-0691/F: 596-0693
www.hfsa.com

CONSULTANT

GRAPHIC SYMBOLS

- DTL# / SHT# — BLDG. ELEV. SYMB.
- DTL# / SHT# — BLDG. SECT. SYMB.
- DTL# / SHT# — WALL SECT. SYMB.
- # — KEYED NOTE SYMB.
- F.G. ELEV — DATUM PT. SYMB.
- ELEV — SPOT ELEV. SYMB.
- RM NAME / RM# / F/B W/W — RM. NAME/NUMB RM. FINISH SYMB.
- CIL ELEV — CEIL. FINISH/ELEV. SYMB.
- DTL# / SHT# — DETAIL REF. SYMB.
- DTL# / SHT# — INTR. ELEV. SYMB.
- DR# / HW# — DOOR/HDWR. SYMB.
- EL# — WINDOW SYMB.

CODE ANALYSIS

APPLICABLE CODES

	Year		Year
International Building Code	2003	National Electrical Code	2005
International Mechanical Code	2003	Uniform Code for Building Conservation	N/A
International Plumbing Code	2003	ADA Accessibility Guildelines	1994
International Fire Code	2003		
International Energy Conservation Code	2003		

A. Occupancy and Group: B S2

Change in Use: Yes ___ No X Mixed Occupancy: Yes X No ___
Special Use and Occupancy (e.g. High Rise, Covered Mall): N/A

B. Seismic Design Category: N/A Design Wind Speed: N/A mph

C. Type of Construction (circle one):

I/A I/B II/A II/B III/A III/B IV/HT V/A V/B

D. Fire Resistance Rating Requirements for the Exterior Walls based on the fire separation distance (in hours):

North: N/A South: N/A East: N/A West: N/A

E. Mixed Occupancies: NO Nonseparated Uses: YES

F: Sprinklers:

Required: NO Provided: YES Type of Sprinkler System: WET

G: Number of Stories: 2 Building Height: 21'-4"

H: Actual Area per Floor (square feet): 1st = 15,582 2nd = 5,782

I: Tabular Area: B = 9,000 S2 = 13,500

J: Area Modifications:

a) $A_a = A_1 + \left[\frac{A_1 I_f}{100}\right] + \left[\frac{A_1 I_s}{100}\right]$ $I_f = 100\left[\frac{F}{P} - 0.25\right]\frac{W}{30}$

b) Sum of the Ratio Calculations for Mixed Occupancies:

$\frac{\text{Actual Area}}{\text{Allowable Area}} \leq 1$

c) Total Allowable Area for:
1) One Story: N/A
2) Two Story: $A_a(2)$ N/A
3) Three Story: $A_a(3)$ N/A

d) Unlimited Area Building: Yes ___ No X Code Section: ___

K. Fire Resistance Rating Requirements for Building Elements (hours).

Element	Hours	Assembly Listing	Element	Hours	Assembly Listing
Exterior Bearing Walls	N/A		Floors - Ceiling Floors	N/A	
Interior Bearing Walls	N/A		Roofs - Ceiling Roofs	N/A	
Exterior Non-Bearing Walls	N/A		Exterior Doors and Windows	N/A	
Structural Frame	N/A		Shaft Enclosures	N/A	
Partitions - Permanent	N/A		Fire Walls	N/A	
Fire Barriers	N/A		Fire Partitions	N/A	
			Smoke Partitions		

L. Design Occupant Load: 80

Exit Width Required: 16" Exit Width Provided: 216"

M. Minimum Number of Required Plumbing Facilities:

a) Water Closets - Required (m) 1 (f) 1 Provided (m) 2 (f) 2
b) Lavatories - Required (m) 1 (f) 1 Provided (m) 2 (f) 2
c) Bath Tubs or Showers: N/A
d) Drinking Fountains: 1 Service Sinks: 1

FOOTNOTES:

1) In case of conflict with the U.S. Department of Justice Federal Registers Parts I through II - ADA Guidelines and specific reference to the International Building Code Accessibility Chapters, the more restrictive requirement shall govern.

2) Additional Code Information shall be provided at the discretion of the Building Official for Complex Buildings. Including, but not limited to:
a) High Rise Requirements.
b) Atriums.
c) Performance Based Criteria.
d) Means or Egress Analysis.
e) Fire Assembly Locator Sheet.
f) Exterior and Interior Accessibility Route.
g) Fire Stopping, Including Tested Design Number.

DRAWING INDEX

ARCHITECTURAL DRAWINGS

GI100	TITLE SHEET, GENERAL INFO, & SHEET INDEX
AS101	SITE DEMO PLAN, NEW DOCK PLAN & SITE DETAILS
AD101	FIRST FLOOR DEMO PLAN
AD102	SECOND FLOOR DEMO PLAN
AD111	FIRST FLOOR CEILING DEMO PLAN
AE101	FIRST FLOOR PLAN
AE102	CEILING & MISC. DETAILS
AE111	FIRST FLOOR REFLECTED CEILING PLAN
AE112	SECOND FLOOR REFLECTED CEILING PLAN
AE401	ENLARGED PLANS & INTERIOR ELEVATIONS
AE402	INTERIOR ELEVATION, CASEWORK & CEILING DETAILS
AE601	DOOR SCHEDULE, DOOR & WINDOW DETAILS

STRUCTURAL DRAWINGS

SG101	GENERAL STRUCTURAL NOTES
SE101	FOOTING & FOUNDATION & FLOOR FRAMING PLANS
SE501	DETAILS

MECHANICAL DRAWINGS

ME001	MECHANICAL SYMBOLS LEGEND & SHEET INDEX
ME501	MECHANICAL DETAILS & SCHEDULES
MD101	MECHANICAL DEMO FLOOR PLANS
MD102	MECHANICAL DEMO FLOOR PLANS
MH101	MECHANICAL FLOOR PLANS
MH102	MECHANICAL FLOOR PLANS
PL101	PLUMBING FLOOR PLANS
PL102	PLUMBING FLOOR PLANS
PL401	LARGE SCALE PLUMBING PLANS

ELECTRICAL DRAWINGS

E0.01	DETAILS, SCHEDULES, SYMBOLS LIST & GENERAL NOTES
E1.01	DEMOLITION FLOOR PLAN - ELECTRICAL
E1.02	DEMOLITION UPPER FLOOR PLAN - ELECTRICAL
E2.01	MAIN FLOOR PLAN - ELECTRICAL
E2.02	UPPER FLOOR PLAN - ELECTRICAL
E9.01	MAIN FLOOR PLAN- LIGHTING
E9.02	UPPER FLOOR PLAN - LIGHTING

GENERAL ABBREVIATIONS

ACT.	ACCOUSTIC CEILING TILE
ALT.	ALTERNATE
ALUM.	ALUMINUM
A.B.	ANCHOR BOLT
&	AND
ARCH.	ARCHITECTURAL
@	AT OR AT THE
BM.	BEAM
BLK.	BLOCK
BLKG.	BLOCKING
BD.	BOARD
BOT.	BOTTOM
BLDG.	BUILDING
CPT.	CARPET
CLKG.	CAULKING
C.I.	CAST IRON
CLG.	CEILING
CEM.	CEMENT
CTR.	CENTER
CL	CENTER LINE
CER.	CERAMIC
C.T.	CERAMIC TILE
CLR.	CLEAR (ANCE)
CLO.	CLOSET
COL.	COLUMN
CONC.	CONCRETE
CMU	CONCRETE MASONRY UNIT
CMP	CORRUGATED METAL PIPE
CONN.	CONNECTION
CONSTR.	CONSTRUCTION
CONT.	CONTINUE/CONTINUOUS
CONTR.	CONTRACTOR
C.J.	CONTROL JOINT
CORR.	CORRIDOR
CNTR.	COUNTER
CTSK.	COUNTERSUNK
DET.	DETAIL
DEPT.	DEPARTMENT
DIA.	DIAMETER
DIM.	DIMENSION
DN.	DOWN
D.S.	DOWNSPOUT
DWG.	DRAWING
D.F.	DRINKING FOUNTAIN
E.	EAST
EA.	EACH
ELEC.	ELECTRIC (AL)
ELEV./EL.	
EXIST.	EXISTING
EQ.	EQUAL
EQUIP.	EQUIPMENT
EXIST.	EXISTING
EXP.	EXPANSION
EXT.	EXTERIOR
FIN.	FINISH
F.A.	FIRE ALARM
F.E.	FIRE EXTINGUISER
F.E.C.	F.E. CABINET
FLR./FL.	FLOOR
F.D.	FLOOR DRAIN
F.O.S.	FACE OF STUD
F.O.W.	FACE OF WALL
FTG.	FOOTING
FDN.	FOUNDATION
F.F.	FINISH FLOOR
GALV	GALVANIZED
G.I.	GALVANIZED IRON
GA.	GAUGE
GL.	GLASS
GR.	GRADE
GND.	GROUND
GYP. BD.	GYPSUM BOARD
GWB	GYPSUM WATERPROOF BOARD
H.D.P.E.	HIGH DENSITY POLYETHYLENE
HG#	HARDWARE GROUP #
HDWD.	HARDWOOD
HT.	HEIGHT
H.P.	HIGH POINT
HORIZ.	HORIZONTAL
H.B.	HOSE BIBB
H.M.	HOLLOW METAL
HR.	HOURS (FIRE RATING)
IN.	INCH
I.D.	INSIDE DIAMETER
INSUL.	INSULATION
INT.	INTERIOR
I.E.	INVERT ELEVATION
INV.	
JAN.	JANITOR
JT.	JOINT
J-BOX	JUNCTION BOX
KIT.	KITCHEN
LAM.	LAMINATE
LAV.	LAVATORY
LT.	LIGHT
L.P.	LOW POINT
MATL.	MATERIAL
MAS.	MASONRY
MAINT.	MAINTENANCE
MFR.	MANUFACTURER
M.H.	MANHOLE
M.O.	MASONRY OPENING
MAX.	MAXIMUM
MECH.	MECHANICAL
MEMB.	MEMBRANE
MEN	MEN'S TOILET
MTL./MET.	METAL
MIN.	MINIMUM
MIR.	MIRROR
MISC.	MISCELLANEOUS
MTD.	MOUNTED
MUL.	MULLION
NOM.	NOMINAL
N.	NORTH
N.I.C.	NOT IN CONTRACT
N.T.S.	NOT TO SCALE
NO.	NUMBER
OR #	ORDINATE NUMBER
OFF.	OFFICE
O.C.	ON CENTER
OPNG.	OPENING
OPP.	OPPOSITE
OPP. H.	OPPOSITE HAND
O.D.	OUTSIDE DIAMETER
O.R.D.	OVERFLOW ROOF DRAIN
PTD.-E	PAINTED EPOXY
PTD.	PAINTED
PR.	PAIR
PART.	PARTITION
PED.	PEDESTRIAN
PLAS.	PLASTER
P. LAM.	PLASTIC LAMINATE
PL	PLATE
PLYWD.	PLYWOOD
PT.	POINT
Q.T.	QUARKY TILE
RAD.	RADIUS
R.B.	RUBBER BASE
R.W.L.	RAIN WATER LEADER
R.F.F.	REFERENCE FINISH FLOOR
REFL.	REFLECTED
REINF.	REINFORCING
REQ.	REQUIRED
RET.	RETAINING
REV.	REVISED
R.	RISER
R.D.	ROOF DRAIN
RM.	ROOM
R.O.	ROUGH OPENING
SCHED.	SCHEDULE
SEAL.	SEALANT
SECT.	SECTION
S.SK.	SERVICE SINK
SHT.	SHEET
SIM.	SIMILAR
SL./SLP.	SLOPE
S.C.	SOLID CORE
SPEC.	SPECIFICATIONS
SQ.	SQUARE
STD.	STANDARD
STL.	STEEL
STOR.	STORAGE
STRUCT	STRUCTURAL/STRUCTURE
SYM.	SYMMETRICAL
T.B.R.	TO BE REMOVED
TEL.	TELEPHONE
TEMP.	TEMPORARY / TEMPERED
THK.	THICK (NESS)
T & G	TONGUE AND GROOVE
T/CONC	TOP OF CONCRETE
T/CURB	TOP OF CURB
T.O. FTG.	TOP OF FOOTING
T.O.P.	TOP OF PLATE
T/WALL	TOP OF WALL
T.	TREAD
TYP.	TYPICAL
UNF.	UNFINISHED
U.N.O.	UNLESS NOTED OTHERWISE
VAR.	VARY OR VARIES
VERT.	VERTICAL
V.T.R.	VENT THROUGH ROOF
VCT	VINYL COMPOSITION TILE
W/	WITH
W.A.S.	WELDED ANCHOR STUD
WD.	WOOD
WP.	WATERPROOF
WSCT.	WAINSCOT
W/O	WITHOUT
W.P.	WORKING POINT
W.R.	WATER RESISTANT
W.I.	WROUGHT IRON

MATERIALS LEGEND

- EARTH
- SAND
- CONCRETE W/ ARCH. FINISH
- CMU
- BRICK
- LIMESTONE
- WOOD (BLOCKING)
- WOOD FRAMING
- STEEL
- RIGID INSULATION
- PLASTER
- COMPRESSIBLE FILLER
- METAL LATH
- FENCE
- GRAVEL
- CONCRETE
- CAST STONE
- MARBLE
- GRANITE
- STONE
- PLYWOOD
- WOOD FINISH
- ALUMINUM
- BATT INSULATION
- ACOUSTICAL TILE
- BACKER ROD AND FILLER
- GYPSUM BOARD
- TO REMOVE

PROJECT DIRECTORY

ARCHITECT
HFS Architects
1484 South State Street
Salt Lake City, Utah 84115
801-596-0691/FAX-596-0693

MECHANICAL ENGINEER
Spectrum Engineers
175 South Main Street, Suite 300
Salt Lake City, Utah 84111
801-328-5151/FAX-328-5155

STRUCTURAL ENGINEER
ES2
442 North Main Street
Bountiful, Utah 84010
801-298-1118/FAX-298-1122

ELECTRICAL ENGINEER
ECE
939 South West Temple
Salt Lake City, Utah 84011
801-521-8007/FAX-521-8067

STORES & RECEIVING BUILDING EXPANSION / RENOVATION

Weber State University
Ogden, Utah

PROPERTY ID#: 4016

MARK	DATE	DESCRIPTION

DATE:	13 MARCH 2006
AGENCY PROJECT NO:	05276810
HFSA PROJECT NO:	0528.01
CAD DWG FILE NO:	
DRAWN BY:	RLS
CHECKED BY:	BWS
DESIGNED BY:	RLS
DWG TYPE:	ARCHITECTURAL
ARCHITECTURAL PHASE:	CONSTRUCTION BID SET

SHEET TITLE

COVER SHEET, GENERAL INFO, & SHEET INDEX

GI100

SHEET 1 OF 31

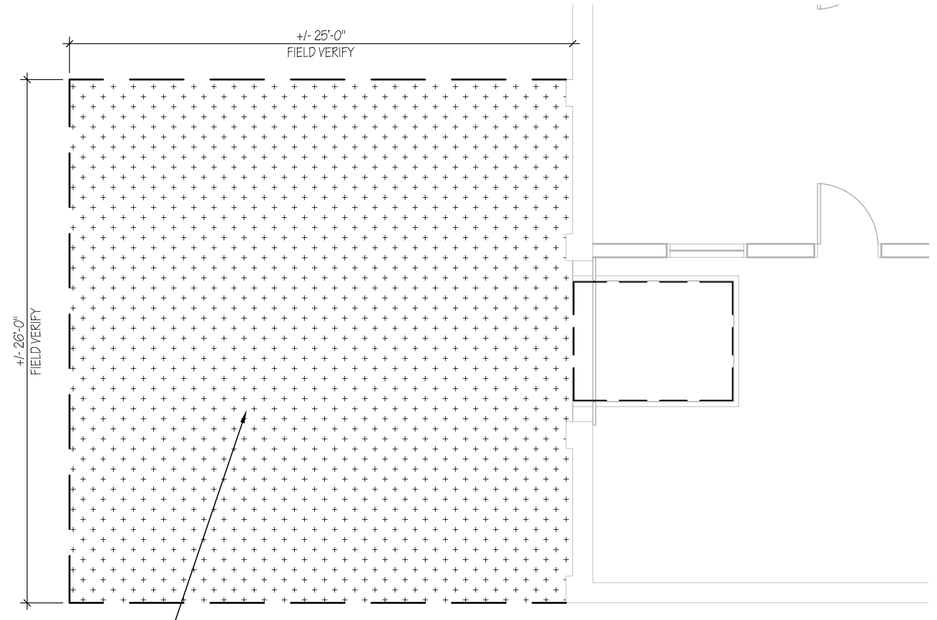

C3 NORTH LOADING DOCK SITE PLAN
3/16"=1'-0"

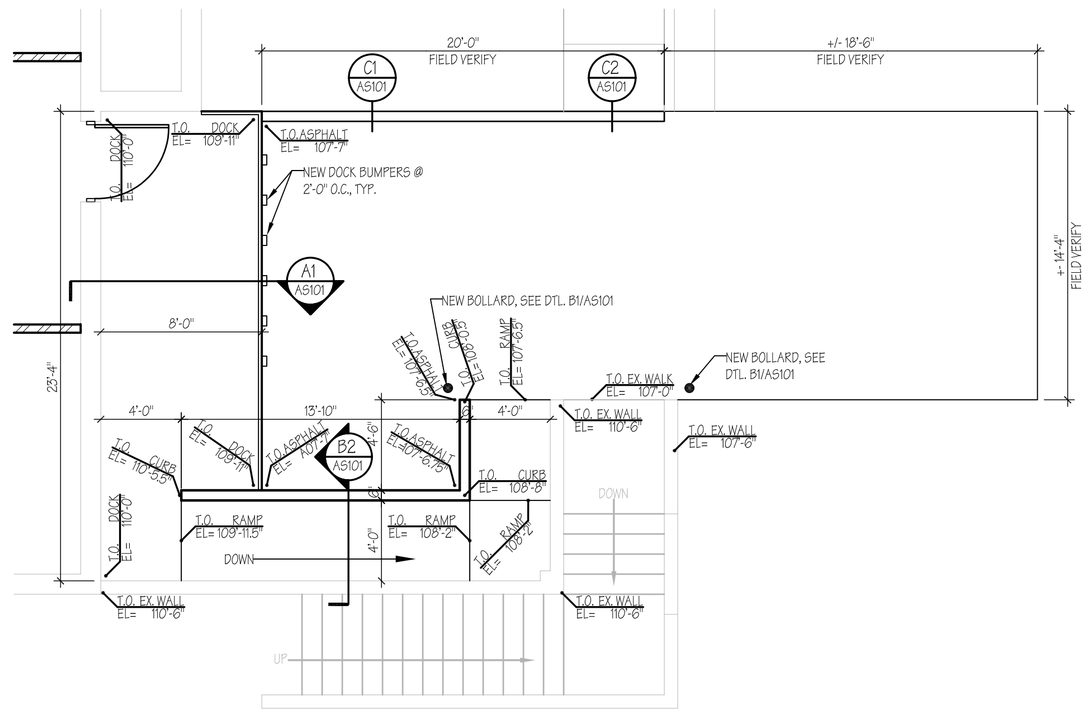

B3 SOUTH LOADING DOCK SITE PLAN
3/16"=1'-0"

C1 CURB DETAIL
3/4"=1'-0"

C2 CURB DETAIL
3/4"=1'-0"

B1 BOLLARD DETAIL
1/2"=1'-0"

B2 LOADING DOCK RAMP SECTION
1/4"=1'-0"

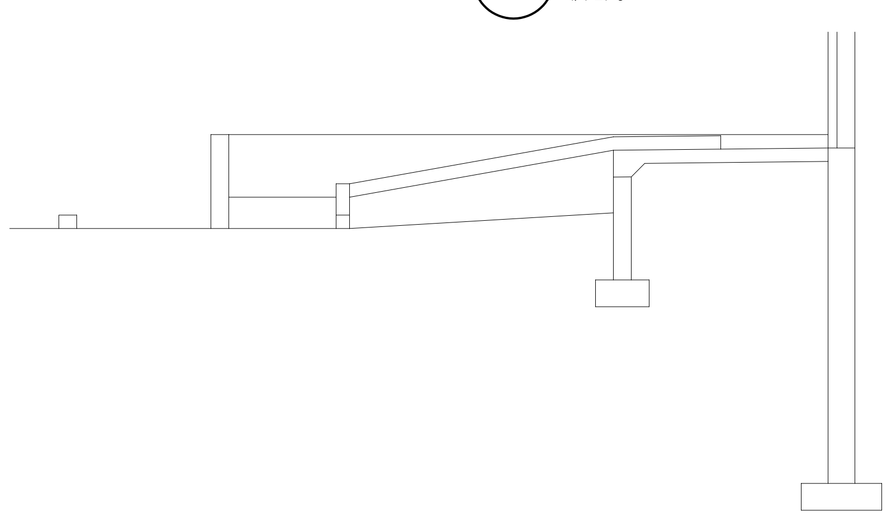

A1 SOUTH LOADING DOCK SECTION
1/4"=1'-0"

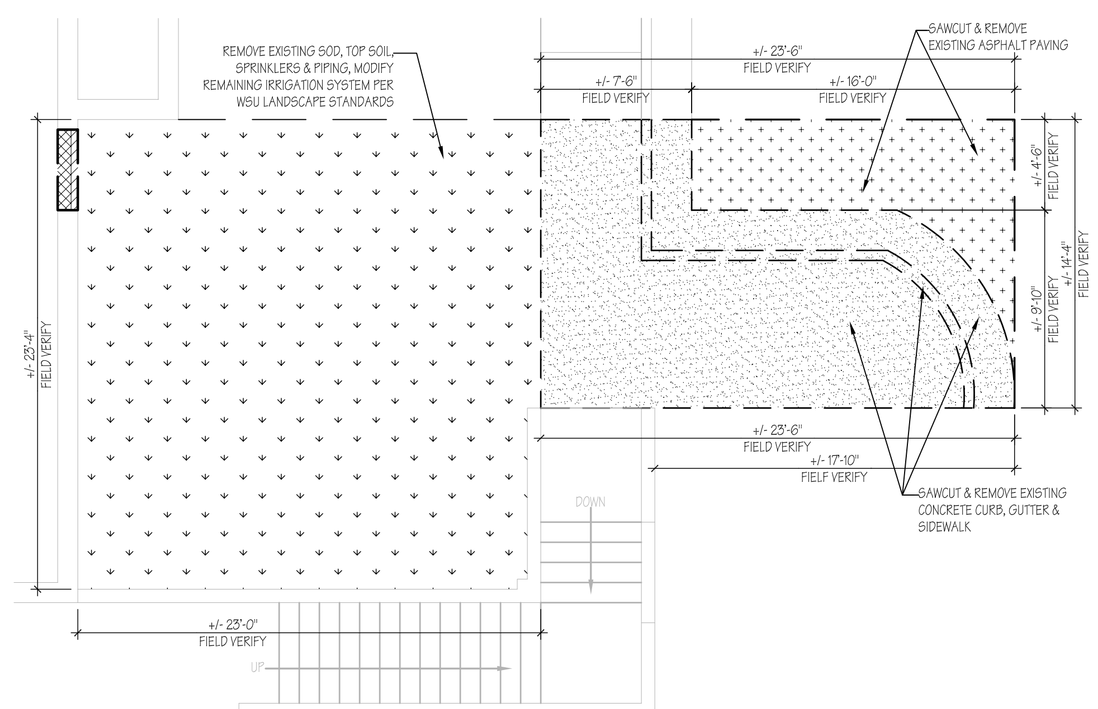

A3 SOUTH LOADING DOCK DEMO PLAN
3/16"=1'-0"

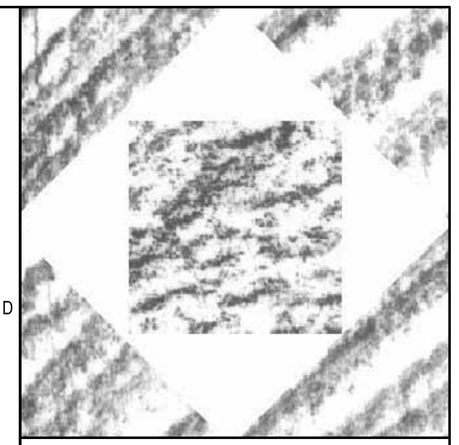

HFSArchitects
ARCHITECTURE
INTERIORS
PLANNING

1484 South State Street
Salt Lake City, Utah 84115
801-596-0691/F: 596-0693
www.hfsa.com

CONSULTANT

GENERAL NOTES

1. ALL DIMENSIONS & EXISTING CONDITIONS IN AREAS OF WORK ARE TO BE FIELD VERIFIED PRIOR TO COMMENCING WORK - ANY DISCREPANCIES ARE TO BE REPORTED TO THE ARCHITECT OR ENGINEER OF RECORD PRIOR TO COMMENCING WORK.

2. PROTECT ALL AREAS & SURFACES ADJACENT TO DEMOLITION & CONSTRUCTION. PATCH & REPAIR ANY DAMAGE OR HOLES IN WALLS, CEILINGS & FLOORS RESULTING FROM THE DEMOLTION OF EXISTING ITEMS OR THE CONSTRUCTION OF NEW ITEMS.

3. NOTED AREAS INDICATED THE GENERAL EXTENT OF DEMOLITON. THE CONTRACTOR'S CHOICE OF MEANS & METHODS OF CONSTRUCTION MAY REQUIRE MORE OR LESS DEMOLITION. THE MEANS & METHODS OF DEMOLITION & CONSTRUCTION MUST BE ACCOUNTED FOR IN THE CONTRACTORS BID. ANY DEMOLITION & REPAIR TO ADJACENT SURFACES BEYOND THE AREAS INDICATED IN THE CONTRACT DOCUMENTS WILL NOT BE COMPENSATED FOR AFTER THE BID OPENING.

4. PRIOR TO THE START OF DEMOLTION, THE CONTRACTOR IS TO MEET WITH THE OWNER & ARCHITECT TO IDENTIFY ALL ITEMS TO BE DEMOLISHED & REMOVED FROM SITE, ITESM TO BE REMOVED & RETURNED TO THE OWNER, OR ITEMS TO BE REMOVED & REINSTALLED.

5. 72-HOUR NOTICE IS REQUIRED FOR ANY UTILITY SHUT DOWN.

6. PRIOR TO BIDDING, THE CONTRACTOR IS TO SURVEY THE EXISTING WALL CONDITIONS. ALL EXISTING NAILS, SCREWS, ABANDONED FASTENERS & HARDWARE IN THE WALLS INDICATED TO REMAIN ARE TO BE REMOVED & THE HOLES PATCHED. IN ADDITION, ALL DAMAGE TO EXISTING WALLS IS TO BE PATCHED & REPAIRED AS PART OF THE BASE BID.

DEMOLITION GENERAL NOTES

1. REMOVE ALL WALLPAPER DECORATIVE BORDERS THRU-OUT PROJECT (SEE PHOTOGRAPHS 12, 14, 16, 21, 22 & 23 FOR TYPICAL EXAMPLES), REPAIR WALL SURFACE & PREP FOR PAINTING.
2. REMOVE ALL WOOD AND/OR PLASTIC WALL PROTECTION THRU-OUT PROJECT (SEE PHOTOGRAPHS 12, 14, 15, 16, 17, 18, 19, 20, 23, 24 & 25 FOR TYPICAL EXAMPLES), PATCH HOLES, REPAIR WALL SURFACE & PREP FOR PAINTING.
3. PATCH ALL EXISTING HOLLES IN WALLS THRU-OUT PROJECT & PREP FOR PAINTING.
4. REPAIR ALL EXSIITING DAMAGE TO WALLS THRU-OUT PROJECT & PREP FOR PAINTING.
5. COMPLETELY GUT ALL RESTROOMS AND BATHROOMS TO FACE OF STUD ON PERIMETER WALLS .
6. COMPLETELY REMOVE ANY REMAINING EXISTING DOOR HARDWARE FROM EXISTING H.M. FRAMES, PATCH & REPAIR DAMAGE TO EXISTING FRAMES & PREP FOR PAINTING.
7. REMOVE ALL REMAINING WALL ANCHORS THRU-OUT PROJECT, PATCH HOLES AND/OR REPAIR WALL DAMAGE, PREP FOR PAINTING.
8. REMOVE ALL REMAIN RUBBER WALL BASE, REPAIR WALL SURFACE & PREP WALL TO RECEIVE NEW WALL BASE.
9. REPAIR WALL SURFACE WHERE WALL BASE HAS BEEN PREVIOUSLY REMOVED, PREP WALL TO RECEIVE NEW WALL BASE.

DEMOLITION PLAN LEGEND

- ASPHALT PAVING & FILL TO BE DEMOLISHED, TYPICAL
- EXISTING LANDSCAPING, IRRIGATION & SOIL TO BE DEMOLISHED, TYPICAL
- EXISTING MEZZANINE FLOOR, RAILING & STRUCTURE TO BE DEMOLISHED, TYPICAL
- EXISTING CONCRETE SLAB & FILL TO BE DEMOLISHED, TYPICAL - SEE STRUCTURAL DRAWINGS, BUILDING SECTION & SITE PLAN
- EXISTING MEZZANINE SUPPORT TO BE DEMOLISHED, TYPICAL
- EXISTING DOOR & FRAME TO BE DEMOLISHED, TYPICAL
- EXISTING MEZZANINE STAIRS TO BE DEMOLISHED, TYPICAL
- EXISTING TOILET TO BE DEMOLISHED, SEE MECHANICAL DRAWINGS, TYPICAL
- EXISTING LAVATORY TO BE DEMOLISHED, SEE MECHANICAL DRAWINGS, TYPICAL

STORES & RECEIVING BUILDING EXPANSION / RENOVATION

Weber State University
Ogden, Utah

PROPERTY ID#: 4016

MARK	DATE	DESCRIPTION

DATE:	13 MARCH 2006
AGENCY PROJECT NO:	05276810
HFSA PROJECT NO:	0528.01
CAD DWG FILE NO:	
DRAWN BY:	RLS
CHECKED BY:	BWS
DESIGNED BY:	RLS
DWG TYPE:	ARCHITECTURAL
ARCHITECTURAL PHASE:	CONSTRUCTION BID SET

SHEET TITLE

SITE DEMO PLAN, NEW DOCK PLAN, & SITE DETAILS

AS101

SHEET 5 OF 31

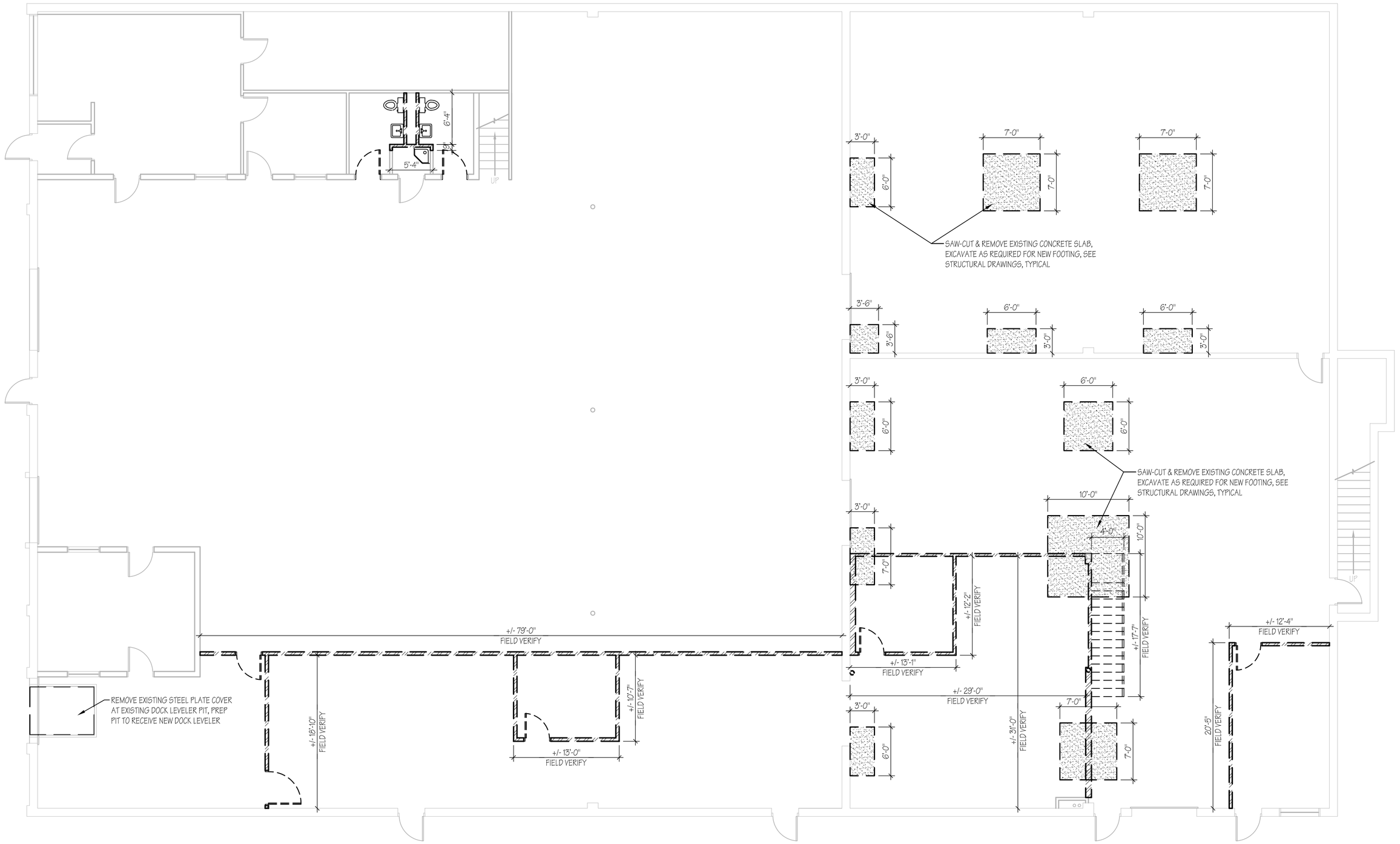

A3 FIRST FLOOR DEMO PLAN
1/8"=1'-0"

N

DEMOLITION GENERAL NOTES

1. REMOVE ALL WALLPAPER DECORATIVE BORDERS THRU-OUT PROJECT (SEE PHOTOGRAPHS 12, 14, 16, 21, 22 & 23 FOR TYPICAL EXAMPLES), REPAIR WALL SURFACE & PREP FOR PAINTING.
2. REMOVE ALL WOOD AND/OR PLASTIC WALL PROTECTION THRU-OUT PROJECT (SEE PHOTOGRAPHS 12, 14, 15, 16, 17, 18, 19, 20, 23, 24 & 25 FOR TYPICAL EXAMPLES), PATCH HOLES, REPAIR WALL SURFACE & PREP FOR PAINTING.
3. PATCH ALL EXISTING HOLLES IN WALLS THRU-OUT PROJECT & PREP FOR PAINTING.
4. REPAIR ALL EXISITING DAMAGE TO WALLS THRU-OUT PROJECT & PREP FOR PAINTING.
5. COMPLETELY GUT ALL RESTROOMS AND BATHROOMS TO FACE OF STUD ON PERIMETER WALLS .
6. COMPLETELY REMOVE ANY REMAINING EXISTING DOOR HARDWARE FROM EXISTING H.M. FRAMES, PATCH & REPAIR DAMAGE TO EXISTING FRAMES & PREP FOR PAINTING.
7. REMOVE ALL REMAINING WALL ANCHORS THRU-OUT PROJECT, PATCH HOLES AND/OR REPAIR WALL DAMAGE, PREP FOR PAINTING.
8. REMOVE ALL REMAIN RUBBER WALL BASE, REPAIR WALL SURFACE & PREP WALL TO RECEIVE NEW WALL BASE.
9. REPAIR WALL SURFACE WHERE WALL BASE HAS BEEN PREVIOUSLY REMOVED, PREP WALL TO RECEIVE NEW WALL BASE.

DEMOLITION PLAN LEGEND

- ASPHALT PAVING & FILL TO BE DEMOLISHED, TYPICAL
- EXISTING LANDSCAPING, IRRIGATION & SOIL TO BE DEMOLISHED, TYPICAL
- EXISTING MEZZANINE FLOOR, RAILING & STRUCTURE TO BE DEMOLISHED, TYPICAL
- EXISTING CONCRETE SLAB & FILL TO BE DEMOLISHED, TYPICAL - SEE STRUCTURAL DRAWINGS, BUILDING SECTION & SITE PLAN
- EXISTING MEZZANINE SUPPORT TO BE DEMOLISHED, TYPICAL
- EXISTING DOOR & FRAME TO BE DEMOLISHED, TYPICAL
- EXISTING MEZZANINE STAIRS TO BE DEMOLISHED, TYPICAL
- EXISTING TOILET TO BE DEMOLISHED, SEE MECHANICAL DRAWINGS, TYPICAL
- EXISTING LAVATORY TO BE DEMOLISHED, SEE MECHANICAL DRAWINGS, TYPICAL

PARTITION LEGEND

- EXISTING MASONRY WALL TO REMAIN, TYPICAL
- EXISTING STUD WALL TO REMAIN, TYPICAL
- EXISTING CMU & BRICK VENEER WALL TO BE DEMOLISHED, TYPICAL
- EXISTING CMU WALL TO BE DEMOLISHED, TYPICAL
- EXISTING STUD WALL TO BE DEMOLISHED, TYPICAL
- NEW 3-5/8" METAL STUD WALL W/ 5/8" GYPSUM BOARD BOTH SIDES CONTINUOUS TO STRUCTURE ABOVE, TYPICAL
- NEW 4'-0" HIGH PONY WALL W/ 3-5/8" METAL STUDS & 5/8" GYPSUM BOARD ON BOTH SIDES & TOP, TYPICAL
- NEW 3-5/8" METAL STUD WALL W/ 5/8" GYPSUM BOARD ONE SIDE CONTINUOUS TO STRUCTURE ABOVE, TYPICAL
- NEW 3-5/8" METAL STUD WALL W/ 5/8" GYPSUM BOARD ONE SIDE CONTINUOUS TO STRUCTURE ABOVE W/ CERAMIC TILE WAINSCOT, TYPICAL
- NEW 3-5/8" METAL STUD WALL W/ 5/8" GYPSUM BOARD BOTH SIDES CONTINUOUS TO STRUCTURE ABOVE W/ CERAMIC TILE WAINSCOT, TYPICAL
- NEW 6" METAL STUD WALL W/ 5/8" GYPSUM BOARD BOTH SIDES CONTINUOUS TO STRUCTURE ABOVE W/ CERAMIC TILE WAINSCOT, TYPICAL
- NEW 8" CMU WALL INFILL, TYPICAL

HFSArchitects
ARCHITECTURE
INTERIORS
PLANNING
1484 South State Street
Salt Lake City, Utah 84115
801-596-0691/F: 596-0693
www.hfsa.com

CONSULTANT

STORES & RECEIVING BUILDING EXPANSION / RENOVATION

Weber State University
Ogden, Utah

PROPERTY ID#: 4016

MARK	DATE	DESCRIPTION

DATE:	13 MARCH 2006
AGENCY PROJECT NO:	05276810
HFSA PROJECT NO:	0528.01
CAD DWG FILE NO:	
DRAWN BY:	RLS
CHECKED BY:	BWS
DESIGNED BY:	RLS
DWG TYPE:	ARCHITECTURAL
ARCHITECTURAL PHASE:	CONSTRUCTION BID SET

SHEET TITLE

FIRST FLOOR DEMO PLAN

AD101

SHEET 6 OF 31

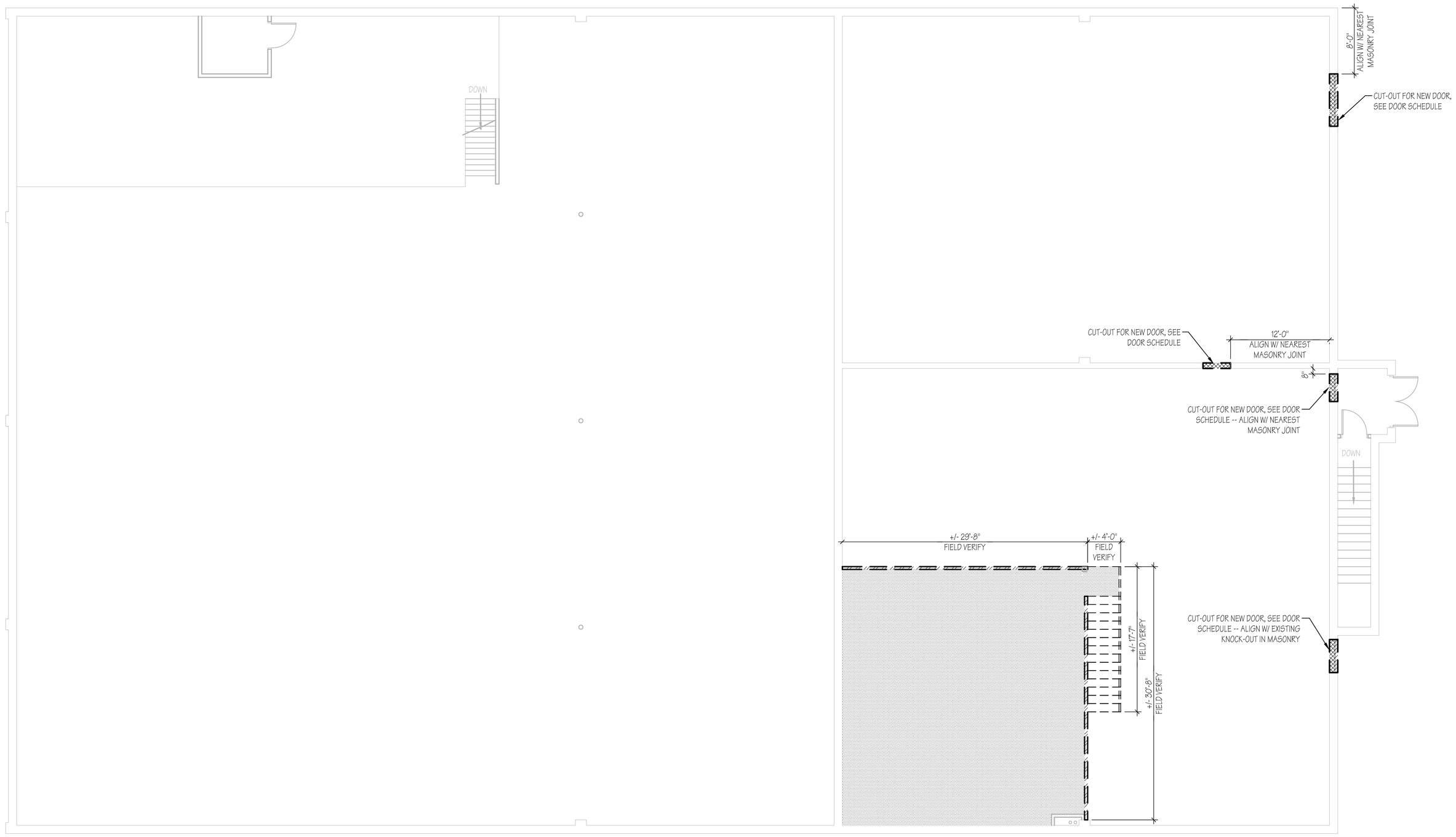

A3 SECOND FLOOR DEMO PLAN
1/8"=1'-0"

N

DEMOLITION GENERAL NOTES

1. REMOVE ALL WALLPAPER DECORATIVE BORDERS THRU-OUT PROJECT (SEE PHOTOGRAPHS 12, 14, 16, 21, 22 & 23 FOR TYPICAL EXAMPLES), REPAIR WALL SURFACE & PREP FOR PAINTING.
2. REMOVE ALL WOOD AND/OR PLASTIC WALL PROTECTION THRU-OUT PROJECT (SEE PHOTOGRAPHS 12, 14, 15, 16, 17, 18, 19, 20, 23, 24 & 25 FOR TYPICAL EXAMPLES), PATCH HOLES, REPAIR WALL SURFACE & PREP FOR PAINTING.
3. PATCH ALL EXISTING HOLLES IN WALLS THRU-OUT PROJECT & PREP FOR PAINTING.
4. REPAIR ALL EXSITING DAMAGE TO WALLS THRU-OUT PROJECT & PREP FOR PAINTING.
5. COMPLETELY GUT ALL RESTROOMS AND BATHROOMS TO FACE OF STUD ON PERIMETER WALLS .
6. COMPLETELY REMOVE ANY REMAINING EXISTING DOOR HARDWARE FROM EXISTING H.M. FRAMES, PATCH & REPAIR DAMAGE TO EXISTING FRAMES & PREP FOR PAINTING.
7. REMOVE ALL REMAINING WALL ANCHORS THRU-OUT PROJECT, PATCH HOLES AND/OR REPAIR WALL DAMAGE, PREP FOR PAINTING.
8. REMOVE ALL REMAIN RUBBER WALL BASE, REPAIR WALL SURFACE & PREP WALL TO RECEIVE NEW WALL BASE.
9. REPAIR WALL SURFACE WHERE WALL BASE HAS BEEN PREVIOUSLY REMOVED, PREP WALL TO RECEIVE NEW WALL BASE.

DEMOLITION PLAN LEGEND

- ASPHALT PAVING & FILL TO BE DEMOLISHED, TYPICAL
- EXISTING LANDSCAPING, IRRIGATION & SOIL TO BE DEMOLISHED, TYPICAL
- EXISTING MEZZANINE FLOOR, RAILING & STRUCTURE TO BE DEMOLISHED, TYPICAL
- EXISTING CONCRETE SLAB & FILL TO BE DEMOLISHED, TYPICAL - SEE STRUCTURAL DRAWINGS, BUILDING SECTION & SITE PLAN
- EXISTING MEZZANINE SUPPORT TO BE DEMOLISHED, TYPICAL
- EXISTING DOOR & FRAME TO BE DEMOLISHED, TYPICAL
- EXISTING MEZZANINE STAIRS TO BE DEMOLISHED, TYPICAL
- EXISTING TOILET TO BE DEMOLISHED, SEE MECHANICAL DRAWINGS, TYPICAL
- EXISTING LAVATORY TO BE DEMOLISHED, SEE MECHANICAL DRAWINGS, TYPICAL

PARTITION LEGEND

- EXISTING MASONRY WALL TO REMAIN, TYPICAL
- EXISTING STUD WALL TO REMAIN, TYPICAL
- EXISTING CMU & BRICK VENEER WALL TO BE DEMOLISHED, TYPICAL
- EXISTING CMU WALL TO BE DEMOLISHED, TYPICAL
- EXISTING STUD WALL TO BE DEMOLISHED, TYPICAL
- NEW 3-5/8" METAL STUD WALL W/ 5/8" GYPSUM BOARD BOTH SIDES CONTINUOUS TO STRUCTURE ABOVE, TYPICAL
- NEW 4'-0" HIGH PONY WALL W/ 3-5/8" METAL STUDS & 5/8" GYPSUM BOARD ON BOTH SIDES & TOP, TYPICAL
- NEW 3-5/8" METAL STUD WALL W/ 5/8" GYPSUM BOARD ONE SIDE CONTINUOUS TO STRUCTURE ABOVE, TYPICAL
- NEW 3-5/8" METAL STUD WALL W/ 5/8" GYPSUM BOARD ONE SIDE CONTINUOUS TO STRUCTURE ABOVE W/ CERAMIC TILE WAINSCOT, TYPICAL
- NEW 3-5/8" METAL STUD WALL W/ 5/8" GYPSUM BOARD BOTH SIDES CONTINUOUS TO STRUCTURE ABOVE W/ CERAMIC TILE WAINSCOT, TYPICAL
- NEW 6" METAL STUD WALL W/ 5/8" GYPSUM BOARD BOTH SIDES CONTINUOUS TO STRUCTURE ABOVE W/ CERAMIC TILE WAINSCOT, TYPICAL
- NEW 8" CMU WALL INFILL, TYPICAL

HFSArchitects
ARCHITECTURE
INTERIORS
PLANNING

1484 South State Street
Salt Lake City, Utah 84115
801-596-0691/F: 596-0693
www.hfsa.com

CONSULTANT

STORES & RECEIVING BUILDING EXPANSION / RENOVATION

Weber State University
Ogden, Utah

PROPERTY ID#: 4016

MARK	DATE	DESCRIPTION

DATE:	13 MARCH 2006
AGENCY PROJECT NO:	05276810
HFSA PROJECT NO:	0528.01
CAD DWG FILE NO:	
DRAWN BY:	RLS
CHECKED BY:	BWS
DESIGNED BY:	RLS
DWG TYPE:	ARCHITECTURAL
ARCHITECTURAL PHASE:	CONSTRUCTION BID SET

SHEET TITLE

SECOND FLOOR DEMO PLAN

AD102

SHEET 7 OF 31

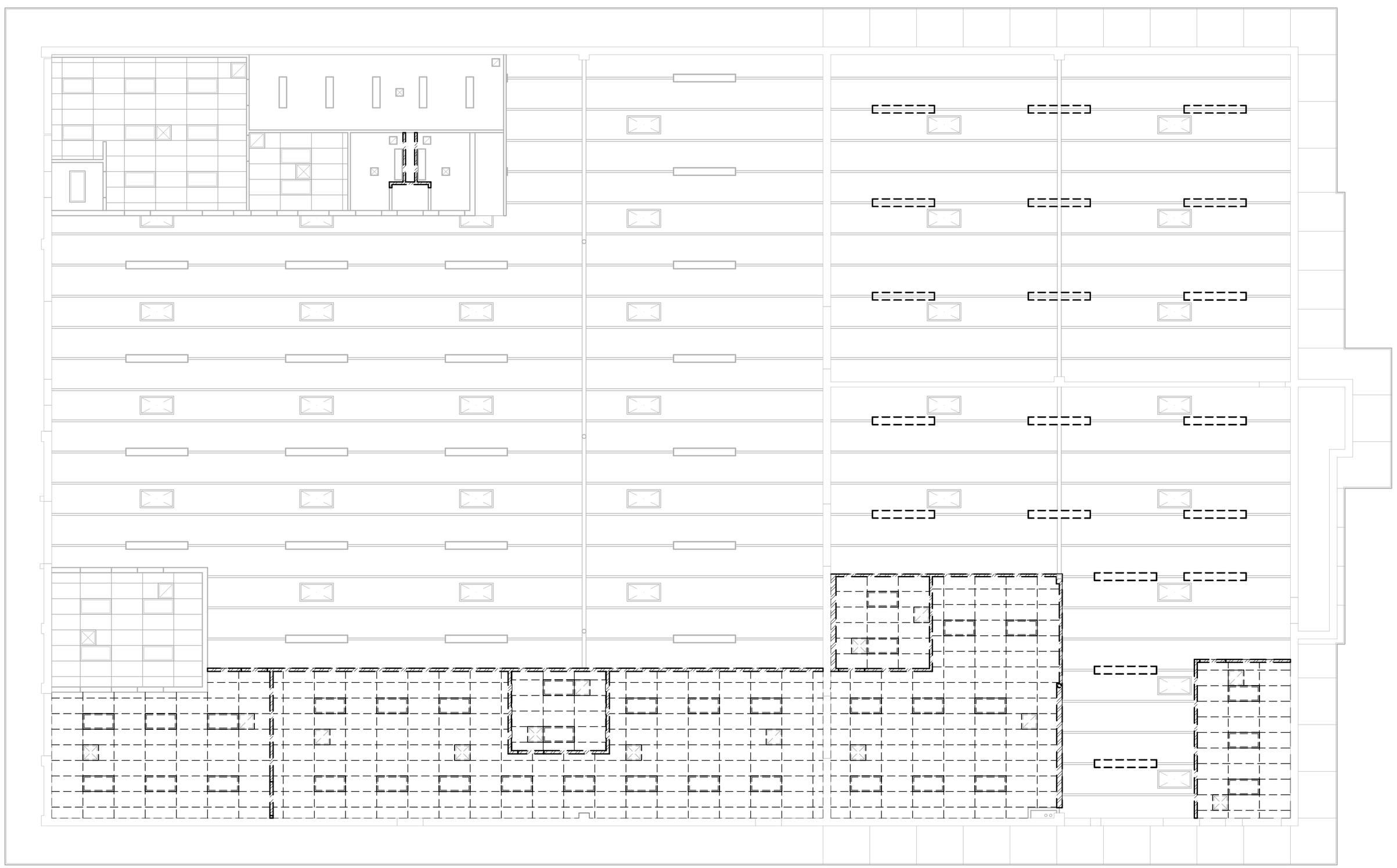

A3 FIRST FLOOR CEILING DEMO PLAN
1/8"=1'-0"

DEMOLITION GENERAL NOTES

1. REMOVE ALL WALLPAPER DECORATIVE BORDERS THRU-OUT PROJECT (SEE PHOTOGRAPHS 12, 14, 16, 21, 22 & 23 FOR TYPICAL EXAMPLES), REPAIR WALL SURFACE & PREP FOR PAINTING.
2. REMOVE ALL WOOD AND/OR PLASTIC WALL PROTECTION THRU-OUT PROJECT (SEE PHOTOGRAPHS 12, 14, 15, 16, 17, 18, 19, 20, 23, 24 & 25 FOR TYPICAL EXAMPLES), PATCH HOLES, REPAIR WALL SURFACE & PREP FOR PAINTING.
3. PATCH ALL EXISTING HOLLES IN WALLS THRU-OUT PROJECT & PREP FOR PAINTING.
4. REPAIR ALL EXSITING DAMAGE TO WALLS THRU-OUT PROJECT & PREP FOR PAINTING.
5. COMPLETELY GUT ALL RESTROOMS AND BATHROOMS TO FACE OF STUD ON PERIMETER WALLS .
6. COMPLETELY REMOVE ANY REMAINING EXISTING DOOR HARDWARE FROM EXISTING H.M. FRAMES, PATCH & REPAIR DAMAGE TO EXISTING FRAMES & PREP FOR PAINTING.
7. REMOVE ALL REMAINING WALL ANCHORS THRU-OUT PROJECT, PATCH HOLES AND/OR REPAIR WALL DAMAGE, PREP FOR PAINTING.
8. REMOVE ALL REMAIN RUBBER WALL BASE, REPAIR WALL SURFACE & PREP WALL TO RECEIVE NEW WALL BASE.
9. REPAIR WALL SURFACE WHERE WALL BASE HAS BEEN PREVIOUSLY REMOVED, PREP WALL TO RECEIVE NEW WALL BASE.

CEILING DEMOLITION LEGEND

- EXISTING 2X4 LAY-IN CEILING SYSTEM TO BE DEMOLISHED
- EXISTING LIGHT FIXTURE TO BE REMOVED, SEE ELECTRICAL DRAWINGS
- EXISTING LIGHT FIXTURE TO BE REMOVED, SEE ELECTRICAL DRAWINGS
- EXISTING MECHANICAL GRILLE TO BE REMOVED, SEE MECHANICAL DRAWINGS
- EXISTING MECHANICAL GRILLE TO BE REMOVED, SEE MECHANICAL DRAWINGS
- EXISTING SKYLIGHT TO REMAIN
- EXISTING LIGHT FIXTURE TO REMAIN, SEE ELECTRICAL DRAWINGS

PARTITION LEGEND

- EXISTING MASONRY WALL TO REMAIN, TYPICAL
- EXISTING STUD WALL TO REMAIN, TYPICAL
- EXISTING CMU & BRICK VENEER WALL TO BE DEMOLISHED, TYPICAL
- EXISTING CMU WALL TO BE DEMOLISHED, TYPICAL
- EXISTING STUD WALL TO BE DEMOLISHED, TYPICAL
- NEW 3-5/8" METAL STUD WALL W/ 5/8" GYPSUM BOARD BOTH SIDES CONTINUOUS TO STRUCTURE ABOVE, TYPICAL
- NEW 4'-0" HIGH PONY WALL W/ 3-5/8" METAL STUDS & 5/8" GYPSUM BOARD ON BOTH SIDES & TOP, TYPICAL
- NEW 3-5/8" METAL STUD WALL W/ 5/8" GYPSUM BOARD ONE SIDE CONTINUOUS TO STRUCTURE ABOVE, TYPICAL
- NEW 3-5/8" METAL STUD WALL W/ 5/8" GYPSUM BOARD ONE SIDE CONTINUOUS TO STRUCTURE ABOVE W/ CERAMIC TILE WAINSCOT, TYPICAL
- NEW 3-5/8" METAL STUD WALL W/ 5/8" GYPSUM BOARD BOTH SIDES CONTINUOUS TO STRUCTURE ABOVE W/ CERAMIC TILE WAINSCOT, TYPICAL
- NEW 6" METAL STUD WALL W/ 5/8" GYPSUM BOARD BOTH SIDES CONTINUOUS TO STRUCTURE ABOVE W/ CERAMIC TILE WAINSCOT, TYPICAL
- NEW 8" CMU WALL INFILL, TYPICAL

HFSArchitects
ARCHITECTURE
INTERIORS
PLANNING

1484 South State Street
Salt Lake City, Utah 84115
801-596-0691/F: 596-0693
www.hfsa.com

CONSULTANT

STORES & RECEIVING BUILDING EXPANSION / RENOVATION

Weber State University
Ogden, Utah

PROPERTY ID#: 4016

MARK	DATE	DESCRIPTION

DATE:	13 MARCH 2006
AGENCY PROJECT NO:	05276810
HFSA PROJECT NO:	0528.01
CAD DWG FILE NO:	
DRAWN BY:	RLS
CHECKED BY:	BWS
DESIGNED BY:	RLS
DWG TYPE:	ARCHITECTURAL
ARCHITECTURAL PHASE:	CONSTRUCTION BID SET

SHEET TITLE

FIRST FLOOR CEILING DEMO PLAN

AD111

SHEET 8 OF 31

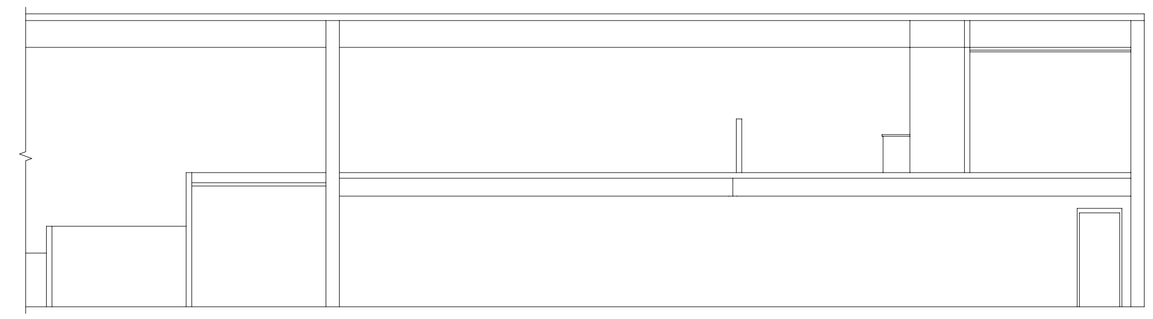

D3 PARTIAL BUILDING SECTION
1/8"=1'-0"

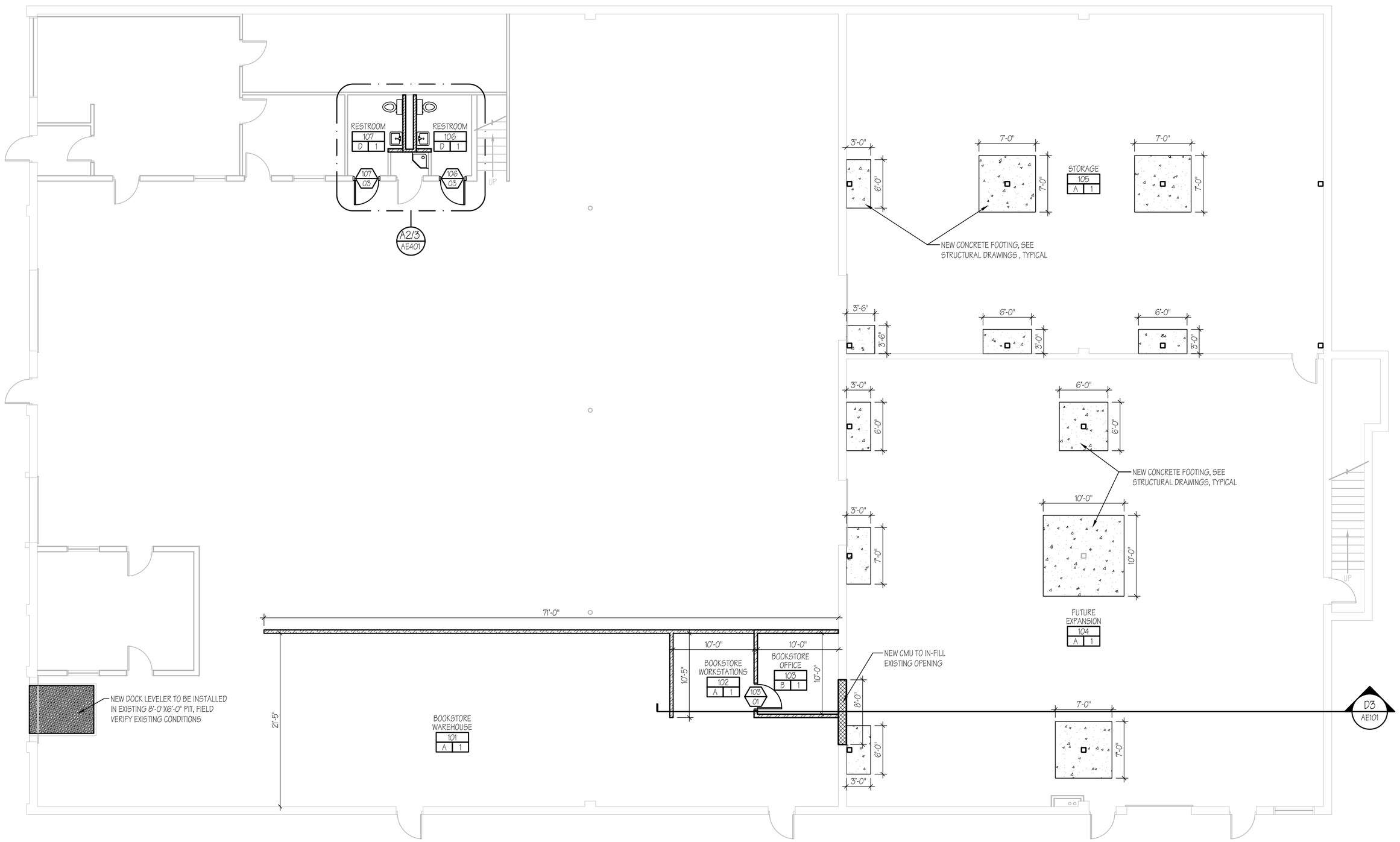

A3 FIRST FLOOR PLAN
1/8"=1'-0"

N

GENERAL NOTES

1. ALL DIMENSIONS & EXISTING CONDITIONS IN AREAS OF WORK ARE TO BE FIELD VERIFIED PRIOR TO COMMENCING WORK - ANY DISCREPANCIES ARE TO BE REPORTED TO THE ARCHITECT OR ENGINEER OF RECORD PRIOR TO COMMENCING WORK.

2. PROTECT ALL AREAS & SURFACES ADJACENT TO DEMOLITION & CONSTRUCTION. PATCH & REPAIR ANY DAMAGE OR HOLES IN WALLS, CEILINGS & FLOORS RESULTING FROM THE DEMOLTION OF EXISTING ITEMS OR THE CONSTRUCTION OF NEW ITEMS.

3. NOTED AREAS INDICATED THE GENERAL EXTENT OF DEMOLITON. THE CONTRACTOR'S CHOICE OF MEANS & METHODS OF CONSTRUCTION MAY REQUIRE MORE OR LESS DEMOLITION. THE MEANS & METHODS OF DEMOLITION & CONSTRUCTION MUST BE ACCOUNTED FOR IN THE CONTRACTOR'S BID. ANY DEMOLITION & REPAIR TO ADJACENT SURFACES BEYOND THE AREAS INDICATED IN THE CONTRACT DOCUMENTS WILL NOT BE COMPENSATED FOR AFTER THE BID OPENING.

4. PRIOR TO THE START OF DEMOLTION, THE CONTRACTOR IS TO MEET WITH THE OWNER & ARCHITECT TO IDENTIFY ALL ITEMS TO BE DEMOLISHED & REMOVED FROM SITE, ITESM TO BE REMOVED & RETURNED TO THE OWNER, OR ITEMS TO BE REMOVED & REINSTALLED.

5. 72-HOUR NOTICE IS REQUIRED FOR ANY UTILITY SHUT DOWN.

6. PRIOR TO BIDDING, THE CONTRACTOR IS TO SURVEY THE EXISTING WALL CONDITIONS. ALL EXISTING NAILS, SCREWS, ABANDONED FASTENERS & HARDWARE IN THE WALLS INDICATED TO REMAIN ARE TO BE REMOVED & THE HOLES PATCHED. IN ADDITION, ALL DAMAGE TO EXISTING WALLS IS TO BE PATCHED & REPAIRED AS PART OF THE BASE BID.

FINISH LEGEND

ROOM NAME
FLOOR / BASE — RM NUM — WALL/WAINSCOT
F W

A. SEALED CONTRETE OR EXISTING CONCRETE FLOOR W/ NEW 4" RUBBER BASE

B. NEW CARPET TILE W/ NEW 4" RUBBER BASE

C. NEW CERAMIC TILE W/ NEW 4" CERAMIC TILE COVE BASE

D. NEW VCT W/ NEW 4" RUBBER BASE

1. PAINT NEW & EXISTING GYPSUM BOARD & MASONRY WALLS, USE BLOCK FILLER & PRIMER WHERE NEW CMU IS INDICATED

2. NEW CERAMIC TILE WAINSCOT W/ EPOXY PAINT ON GYPSUM BOARD WALLS

3. EPOXY PAINT

PARTITION LEGEND

- EXISTING MASONRY WALL TO REMAIN, TYPICAL
- EXISTING STUD WALL TO REMAIN, TYPICAL
- EXISTING CMU & BRICK VENEER WALL TO BE DEMOLISHED, TYPICAL
- EXISTING CMU WALL TO BE DEMOLISHED, TYPICAL
- EXISTING STUD WALL TO BE DEMOLISHED, TYPICAL
- NEW 3-5/8" METAL STUD WALL W/ 5/8" GYPSUM BOARD BOTH SIDES CONTINUOUS TO STRUCTURE ABOVE, TYPICAL
- NEW 4'-0" HIGH PONY WALL W/ 3-5/8" METAL STUDS & 5/8" GYPSUM BOARD ON BOTH SIDES & TOP, TYPICAL
- NEW 3-5/8" METAL STUD WALL W/ 5/8" GYPSUM BOARD ONE SIDE CONTINUOUS TO STRUCTURE ABOVE, TYPICAL
- NEW 3-5/8" METAL STUD WALL W/ 5/8" GYPSUM BOARD ONE SIDE CONTINUOUS TO STRUCTURE ABOVE W/ CERAMIC TILE WAINSCOT, TYPICAL
- NEW 3-5/8" METAL STUD WALL W/ 5/8" GYPSUM BOARD BOTH SIDES CONTINUOUS TO STRUCTURE ABOVE W/ CERAMIC TILE WAINSCOT, TYPICAL
- NEW 6" METAL STUD WALL W/ 5/8" GYPSUM BOARD BOTH SIDES CONTINUOUS TO STRUCTURE ABOVE W/ CERAMIC TILE WAINSCOT, TYPICAL
- NEW 8" CMU WALL INFILL, TYPICAL

HFSArchitects
ARCHITECTURE
INTERIORS
PLANNING
1484 South State Street
Salt Lake City, Utah 84115
801-596-0691/F: 596-0693
www.hfsa.com

CONSULTANT

STORES & RECEIVING BUILDING EXPANSION / RENOVATION

Weber State University
Ogden, Utah

PROPERTY ID#: 4016

MARK	DATE	DESCRIPTION

DATE:	13 MARCH 2006
AGENCY PROJECT NO:	05276810
HFSA PROJECT NO:	0528.01
CAD DWG FILE NO:	
DRAWN BY:	RLS
CHECKED BY:	BWS
DESIGNED BY:	RLS
DWG TYPE:	ARCHITECTURAL
ARCHITECTURAL PHASE:	CONSTRUCTION BID SET

SHEET TITLE

FIRST FLOOR PLAN

AE101

SHEET 9 OF 31

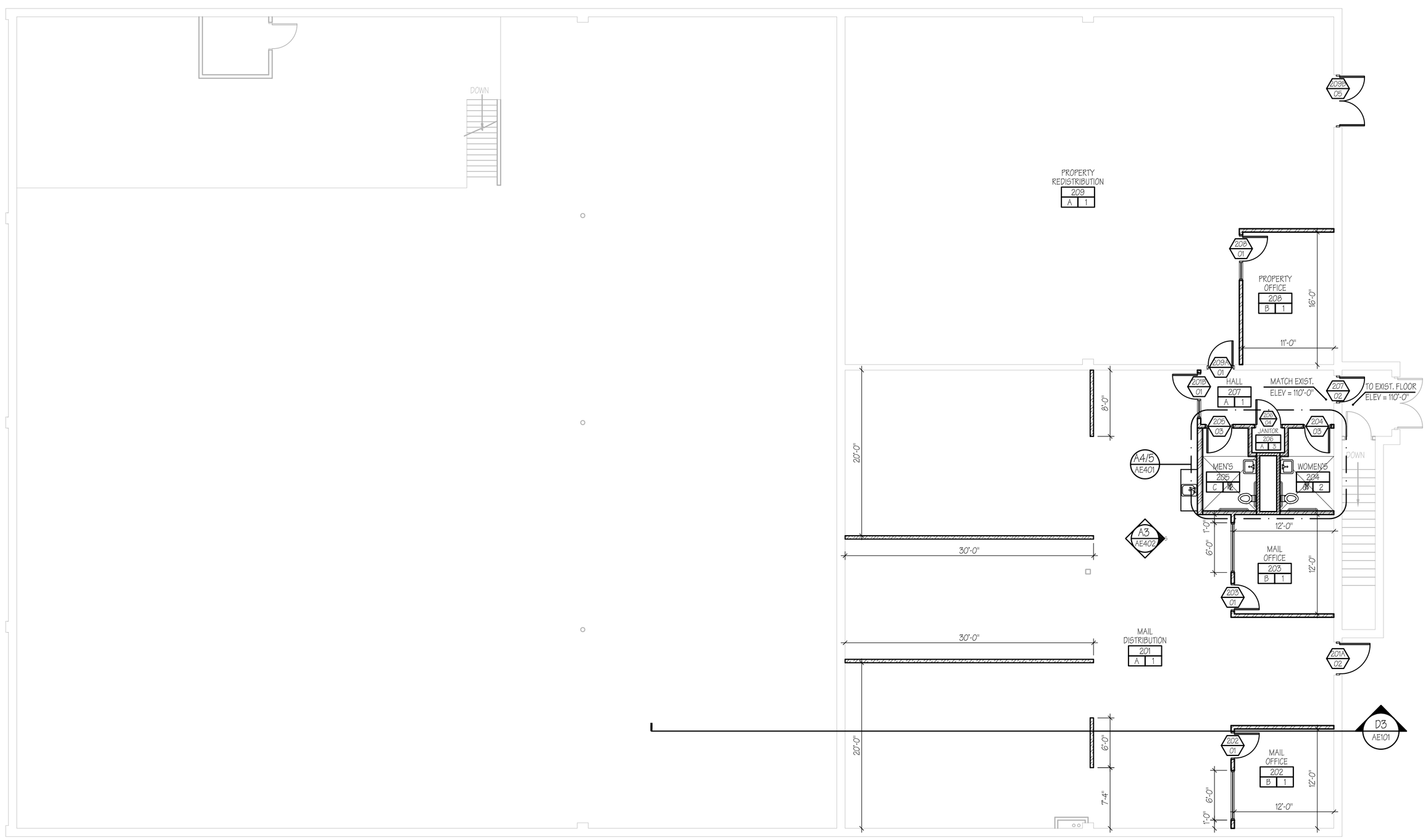

A3 SECOND FLOOR PLAN
1/8"=1'-0"

GENERAL NOTES

1. ALL DIMENSIONS & EXISTING CONDITIONS IN AREAS OF WORK ARE TO BE FIELD VERIFIED PRIOR TO COMMENCING WORK - ANY DISCREPANCIES ARE TO BE REPORTED TO THE ARCHITECT OR ENGINEER OF RECORD PRIOR TO COMMENCING WORK.

2. PROTECT ALL AREAS & SURFACES ADJACENT TO DEMOLITION & CONSTRUCTION. PATCH & REPAIR ANY DAMAGE OR HOLES IN WALLS, CEILINGS & FLOORS RESULTING FROM THE DEMOLTION OF EXISTING ITEMS OR THE CONSTRUCTION OF NEW ITEMS.

3. NOTED AREAS INDICATED THE GENERAL EXTENT OF DEMOLITON. THE CONTRACTOR'S CHOICE OF MEANS & METHODS OF CONSTRUCTION MAY REQUIRE MORE OR LESS DEMOLITION. THE MEANS & METHODS OF DEMOLITION & CONSTRUCTION MUST BE ACCOUNTED FOR IN THE CONTRACTOR'S BID. ANY DEMOLITION & REPAIR TO ADJACENT SURFACES BEYOND THE AREAS INDICATED IN THE CONTRACT DOCUMENTS WILL NOT BE COMPENSATED FOR AFTER THE BID OPENING.

4. PRIOR TO THE START OF DEMOLTION, THE CONTRACTOR IS TO MEET WITH THE OWNER & ARCHITECT TO IDENTIFY ALL ITEMS TO BE DEMOLISHED & REMOVED FROM SITE, ITESM TO BE REMOVED & RETURNED TO THE OWNER, OR ITEMS TO BE REMOVED & REINSTALLED.

5. 72-HOUR NOTICE IS REQUIRED FOR ANY UTILITY SHUT DOWN.

6. PRIOR TO BIDDING, THE CONTRACTOR IS TO SURVEY THE EXISTING WALL CONDITIONS. ALL EXISTING NAILS, SCREWS, ABANDONED FASTENERS & HARDWARE IN THE WALLS INDICATED TO REMAIN ARE TO BE REMOVED & THE HOLES PATCHED. IN ADDITION, ALL DAMAGE TO EXISTING WALLS IS TO BE PATCHED & REPAIRED AS PART OF THE BASE BID.

FINISH LEGEND

ROOM NAME
RM NUM
FLOOR / BASE — F | W — WALL/WAINSCOT

A. SEALED CONTRETE OR EXISTING CONCRETE FLOOR W/ NEW 4" RUBBER BASE
B. NEW CARPET TILE W/ NEW 4" RUBBER BASE
C. NEW CERAMIC TILE W/ NEW 4" CERAMIC TILE COVE BASE
D. NEW VCT W/ NEW 4" RUBBER BASE

1. PAINT NEW & EXISTING GYPSUM BOARD & MASONRY WALLS, USE BLOCK FILLER & PRIMER WHERE NEW CMU IS INDICATED
2. NEW CERAMIC TILE WAINSCOT W/ EPOXY PAINT ON GYPSUM BOARD WALLS
3. EPOXY PAINT

PARTITION LEGEND

- EXISTING MASONRY WALL TO REMAIN, TYPICAL
- EXISTING STUD WALL TO REMAIN, TYPICAL
- EXISTING CMU & BRICK VENEER WALL TO BE DEMOLISHED, TYPICAL
- EXISTING CMU WALL TO BE DEMOLISHED, TYPICAL
- EXISTING STUD WALL TO BE DEMOLISHED, TYPICAL
- NEW 3-5/8" METAL STUD WALL W/ 5/8" GYPSUM BOARD BOTH SIDES CONTINUOUS TO STRUCTURE ABOVE, TYPICAL
- NEW 4'-0" HIGH PONY WALL W/ 3-5/8" METAL STUDS & 5/8" GYPSUM BOARD ON BOTH SIDES & TOP, TYPICAL
- NEW 3-5/8" METAL STUD WALL W/ 5/8" GYPSUM BOARD ONE SIDE CONTINUOUS TO STRUCTURE ABOVE, TYPICAL
- NEW 3-5/8" METAL STUD WALL W/ 5/8" GYPSUM BOARD ONE SIDE CONTINUOUS TO STRUCTURE ABOVE W/ CERAMIC TILE WAINSCOT, TYPICAL
- NEW 3-5/8" METAL STUD WALL W/ 5/8" GYPSUM BOARD BOTH SIDES CONTINUOUS TO STRUCTURE ABOVE W/ CERAMIC TILE WAINSCOT, TYPICAL
- NEW 6" METAL STUD WALL W/ 5/8" GYPSUM BOARD BOTH SIDES CONTINUOUS TO STRUCTURE ABOVE W/ CERAMIC TILE WAINSCOT, TYPICAL
- NEW 8" CMU WALL INFILL, TYPICAL

HFSArchitects
ARCHITECTURE
INTERIORS
PLANNING
1484 South State Street
Salt Lake City, Utah 84115
801-596-0691/F: 596-0693
www.hfsa.com

CONSULTANT

STORES & RECEIVING BUILDING EXPANSION / RENOVATION

Weber State University
Ogden, Utah

PROPERTY ID#: 4016

MARK	DATE	DESCRIPTION

DATE:	13 MARCH 2006
AGENCY PROJECT NO:	05276810
HFSA PROJECT NO:	0528.01
CAD DWG FILE NO:	
DRAWN BY:	RLS
CHECKED BY:	BWS
DESIGNED BY:	RLS
DWG TYPE:	ARCHITECTURAL
ARCHITECTURAL PHASE:	CONSTRUCTION BID SET

SHEET TITLE

SECOND FLOOR PLAN

AE102

SHEET 10 OF 31

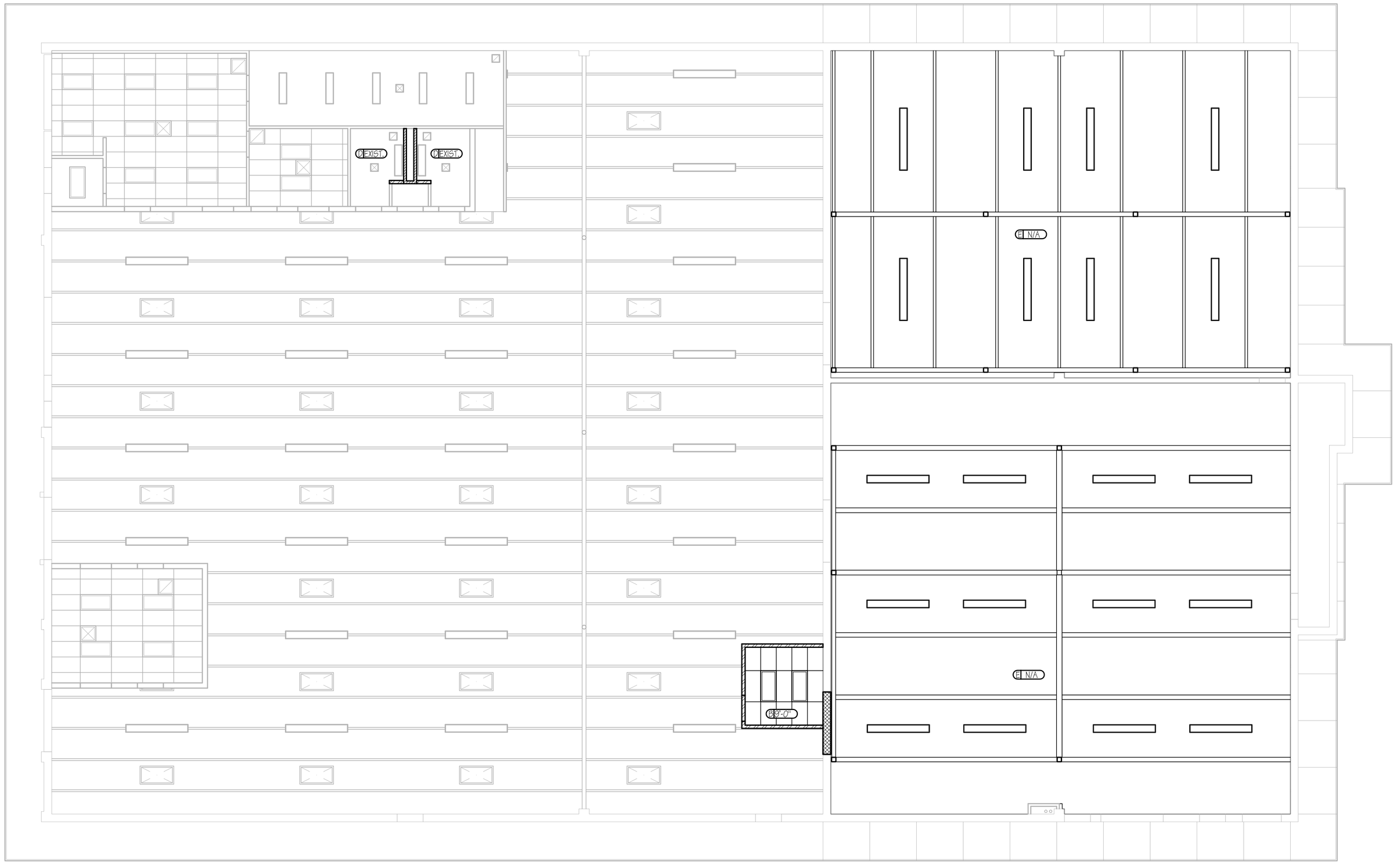

A3 FIRST FLOOR REFLECTED CEILING PLAN
1/8"=1'-0"

CEILING FINISH LEGEND

CEILING FINISH — 12'-0" — CEILING ELEVATION

A. UNFINISHED
B. SUSPENDED 2X4 CEILING GRID SYSTEM W/ ACOUSTICAL PANELS
C. SUSPENDED GYPSUM BOARD CEILING W/ 12X12 ACOUSTICAL TILE
D. PAINT EXISTING CEILING W/ EPOXY PAINT
E. PAINT NEW METAL DECK & STEEL STRUCTURE

CEILING PLAN LEGEND

- NEW 2X4 SUSPENDED CEILING SYSTEM W/ LAY-IN ACOUSTIC PANELS
- NEW SUSPENDED GYPSUM BOARD CEILING SYSTEM W/ 12X12 ACOUSTIC TILE
- NEW LIGHT FIXTURE, SEE ELECTRICAL DRAWINGS
- NEW LIGHT FIXTURE, SEE ELECTRICAL DRAWINGS
- NEW MECHANICAL GRILLE, SEE MECHANICAL DRAWINGS
- NEW MECHANICAL GRILLE, SEE MECHANICAL DRAWINGS
- EXISTING SKYLIGHT TO REMAIN
- EXISTING LIGHT FIXTURE TO REMAIN, SEE ELECTRICAL DRAWINGS

PARTITION LEGEND

- EXISTING MASONRY WALL TO REMAIN, TYPICAL
- EXISTING STUD WALL TO REMAIN, TYPICAL
- EXISTING CMU & BRICK VENEER WALL TO BE DEMOLISHED, TYPICAL
- EXISTING CMU WALL TO BE DEMOLISHED, TYPICAL
- EXISTING STUD WALL TO BE DEMOLISHED, TYPICAL
- NEW 3-5/8" METAL STUD WALL W/ 5/8" GYPSUM BOARD BOTH SIDES CONTINUOUS TO STRUCTURE ABOVE, TYPICAL
- NEW 4'-0" HIGH PONY WALL W/ 3-5/8" METAL STUDS & 5/8" GYPSUM BOARD ON BOTH SIDES & TOP, TYPICAL
- NEW 3-5/8" METAL STUD WALL W/ 5/8" GYPSUM BOARD ONE SIDE CONTINUOUS TO STRUCTURE ABOVE, TYPICAL
- NEW 3-5/8" METAL STUD WALL W/ 5/8" GYPSUM BOARD ONE SIDE CONTINUOUS TO STRUCTURE ABOVE W/ CERAMIC TILE WAINSCOT, TYPICAL
- NEW 3-5/8" METAL STUD WALL W/ 5/8" GYPSUM BOARD BOTH SIDES CONTINUOUS TO STRUCTURE ABOVE W/ CERAMIC TILE WAINSCOT, TYPICAL
- NEW 6" METAL STUD WALL W/ 5/8" GYPSUM BOARD BOTH SIDES CONTINUOUS TO STRUCTURE ABOVE W/ CERAMIC TILE WAINSCOT, TYPICAL
- NEW 8" CMU WALL INFILL, TYPICAL

HFSArchitects
ARCHITECTURE
INTERIORS
PLANNING

1484 South State Street
Salt Lake City, Utah 84115
801-596-0691/F: 596-0693
www.hfsa.com

CONSULTANT

STORES & RECEIVING BUILDING EXPANSION / RENOVATION

Weber State University
Ogden, Utah

PROPERTY ID#: 4016

MARK	DATE	DESCRIPTION

DATE:	13 MARCH 2006
AGENCY PROJECT NO:	05276810
HFSA PROJECT NO:	0528.01
CAD DWG FILE NO:	
DRAWN BY:	RLS
CHECKED BY:	BWS
DESIGNED BY:	RLS
DWG TYPE:	ARCHITECTURAL
ARCHITECTURAL PHASE:	CONSTRUCTION BID SET

SHEET TITLE

FIRST FLOOR REFLECTED CEILING PLAN

AE111

SHEET 11 OF 31

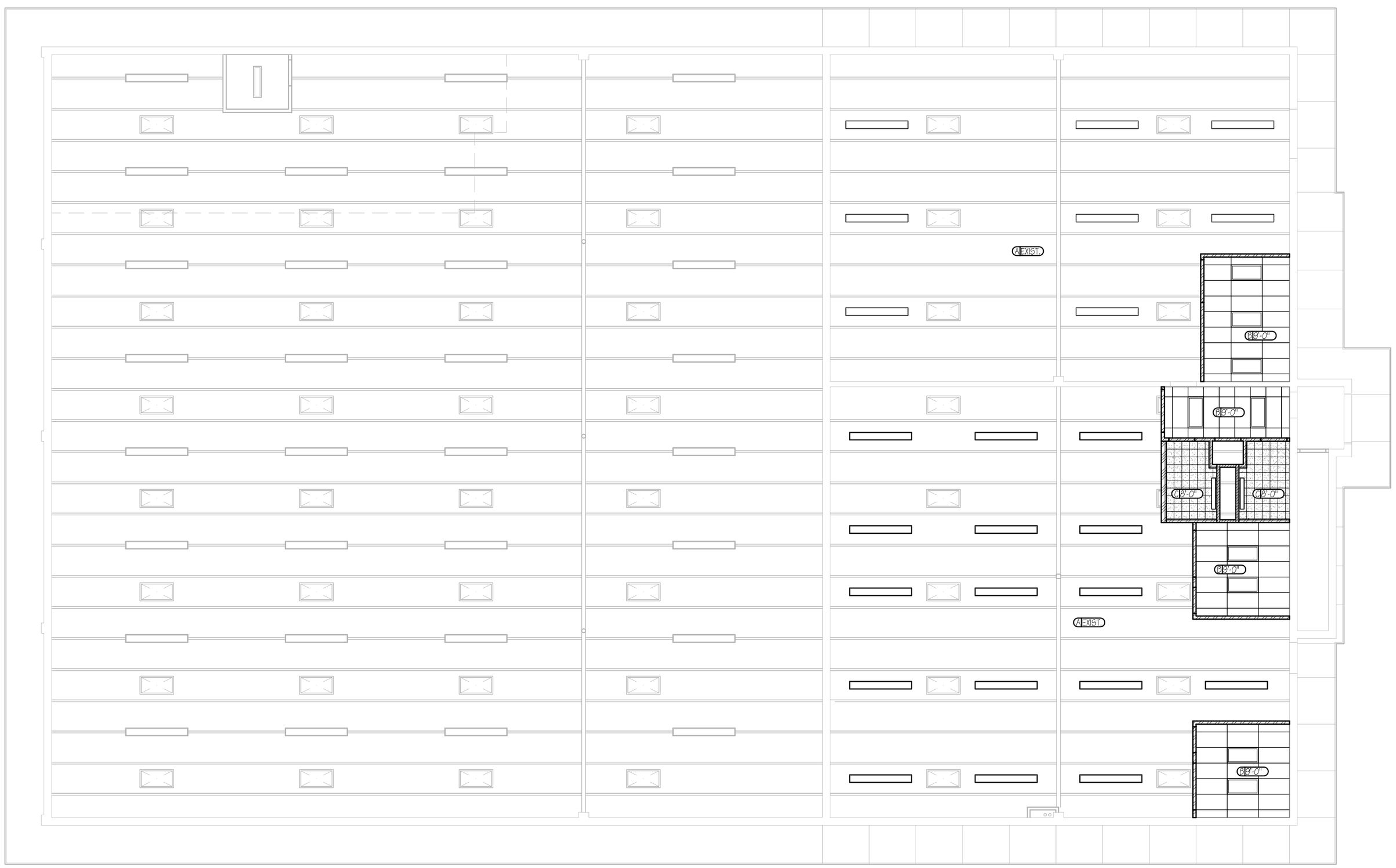

A3 SECOND FLOOR REFLECTED CEILING PLAN
1/8"=1'-0"

CEILING FINISH LEGEND

CEILING FINISH — A2'-0" — CEILING ELEVATION

A. UNFINISHED
B. SUSPENDED 2X4 CEILING GRID SYSTEM W/ ACOUSTICAL PANELS
C. SUSPENDED GYPSUM BOARD CEILING W/ 12X12 ACOUSTICAL TILE
D. PAINT EXISTING CEILING W/ EPOXY PAINT
E. PAINT NEW METAL DECK & STEEL STRUCTURE

CEILING PLAN LEGEND

NEW 2X4 SUSPENDED CEILING SYSTEM W/ LAY-IN ACOUSTIC PANELS
NEW SUSPENDED GYPSUM BOARD CEILING SYSTEM W/ 12X12 ACOUSTIC TILE
NEW LIGHT FIXTURE, SEE ELECTRICAL DRAWINGS
NEW LIGHT FIXTURE, SEE ELECTRICAL DRAWINGS
NEW MECHANICAL GRILLE, SEE MECHANICAL DRAWINGS
NEW MECHANICAL GRILLE, SEE MECHANICAL DRAWINGS
EXISTING SKYLIGHT TO REMAIN
EXISTING LIGHT FIXTURE TO REMAIN, SEE ELECTRICAL DRAWINGS

PARTITION LEGEND

EXISTING MASONRY WALL TO REMAIN, TYPICAL
EXISTING STUD WALL TO REMAIN, TYPICAL
EXISTING CMU & BRICK VENEER WALL TO BE DEMOLISHED, TYPICAL
EXISTING CMU WALL TO BE DEMOLISHED, TYPICAL
EXISTING STUD WALL TO BE DEMOLISHED, TYPICAL
NEW 3-5/8" METAL STUD WALL W/ 5/8" GYPSUM BOARD BOTH SIDES CONTINUOUS TO STRUCTURE ABOVE, TYPICAL
NEW 4'-0" HIGH PONY WALL W/ 3-5/8" METAL STUDS & 5/8" GYPSUM BOARD ON BOTH SIDES & TOP, TYPICAL
NEW 3-5/8" METAL STUD WALL W/ 5/8" GYPSUM BOARD ONE SIDE CONTINUOUS TO STRUCTURE ABOVE, TYPICAL
NEW 3-5/8" METAL STUD WALL W/ 5/8" GYPSUM BOARD ONE SIDE CONTINUOUS TO STRUCTURE ABOVE W/ CERAMIC TILE WAINSCOT, TYPICAL
NEW 3-5/8" METAL STUD WALL W/ 5/8" GYPSUM BOARD BOTH SIDES CONTINUOUS TO STRUCTURE ABOVE W/ CERAMIC TILE WAINSCOT, TYPICAL
NEW 6" METAL STUD WALL W/ 5/8" GYPSUM BOARD BOTH SIDES CONTINUOUS TO STRUCTURE ABOVE W/ CERAMIC TILE WAINSCOT, TYPICAL
NEW 8" CMU WALL INFILL, TYPICAL

HFSArchitects
ARCHITECTURE
INTERIORS
PLANNING
1484 South State Street
Salt Lake City, Utah 84115
801-596-0691/F: 596-0693
www.hfsa.com

CONSULTANT

STORES & RECEIVING BUILDING EXPANSION / RENOVATION

Weber State University
Ogden, Utah

PROPERTY ID#: 4016

MARK	DATE	DESCRIPTION

DATE:	13 MARCH 2006
AGENCY PROJECT NO:	05276810
HFSA PROJECT NO:	0528.01
CAD DWG FILE NO:	
DRAWN BY:	RLS
CHECKED BY:	BWS
DESIGNED BY:	RLS
DWG TYPE:	ARCHITECTURAL
ARCHITECTURAL PHASE:	CONSTRUCTION BID SET

SHEET TITLE

SECOND FLOOR REFLECTED CEILING PLAN

AE112

SHEET 12 OF 31

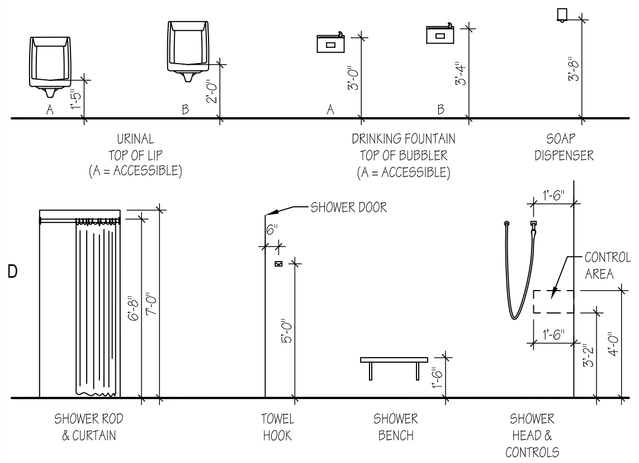

C1 TYP. RESTROOM MOUNTING HEIGHTS
1/4"=1'-0"

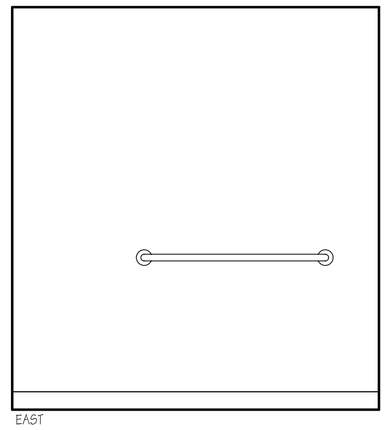

C2 ROOM 107 INTERIOR ELEVATIONS
1/2"=1'-0"

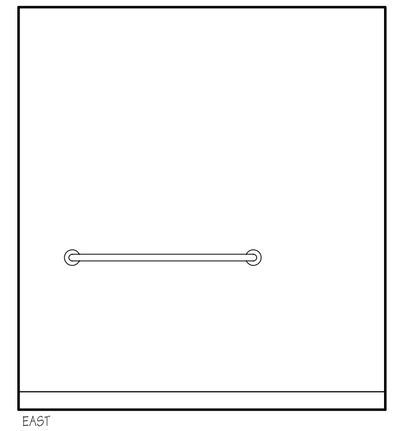

C3 ROOM 106 INTERIOR ELEVATIONS
1/2"=1'-0"

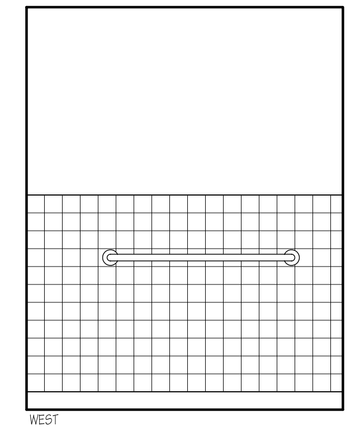

C4 ROOM 205 INTERIOR ELEVATIONS
1/2"=1'-0"

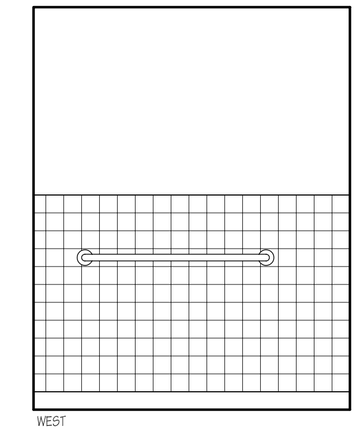

C5 ROOM 204 INTERIOR ELEVATIONS
1/2"=1'-0"

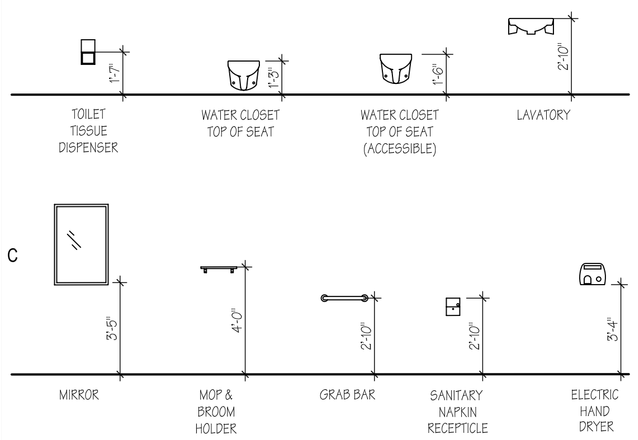

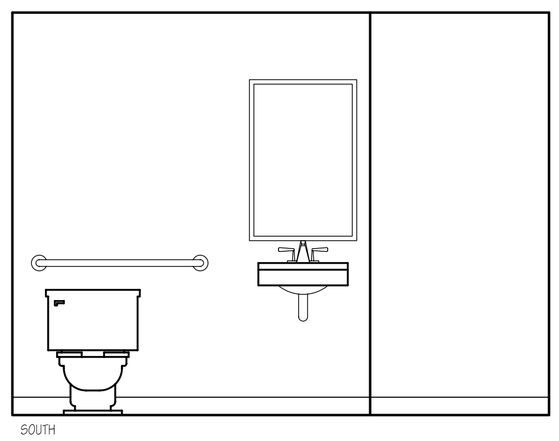

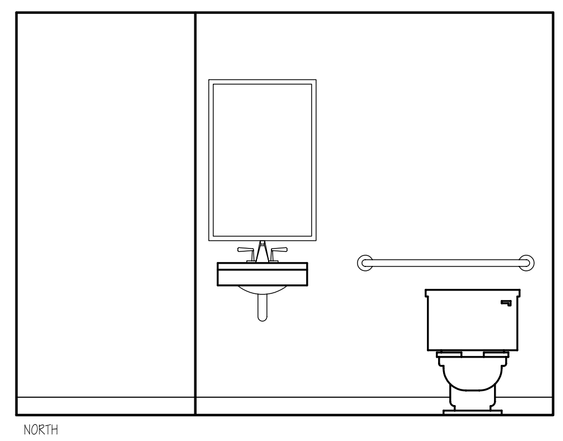

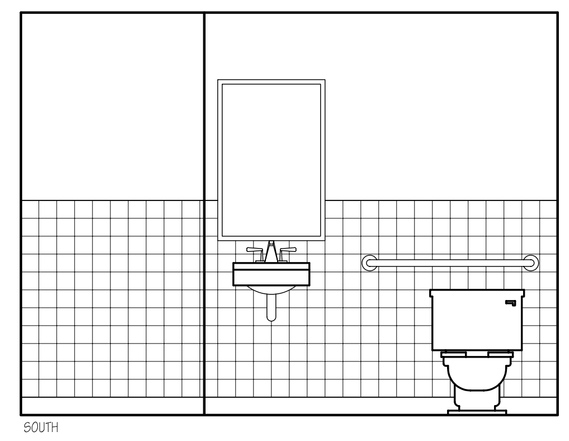

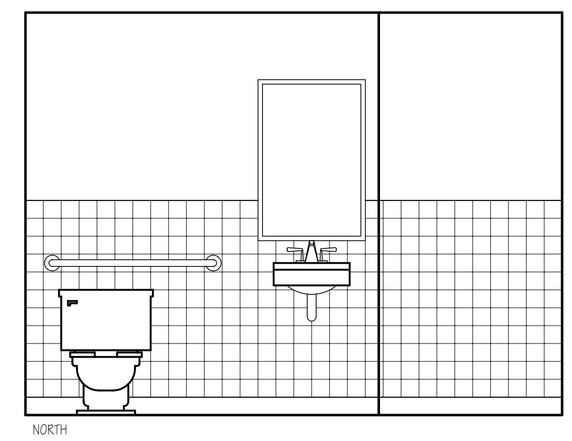

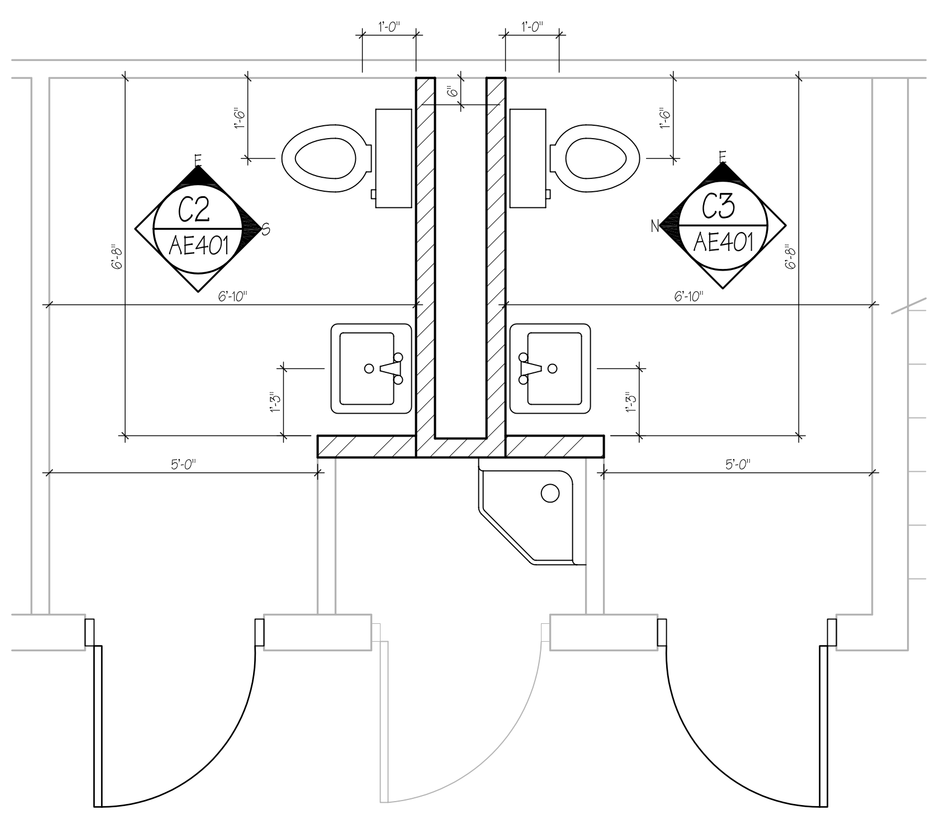

A2 ROOM 107 ENLARGED PLAN
1/2"=1'-0"

A3 ROOM 106 ENLARGED PLAN
1/2"=1'-0"

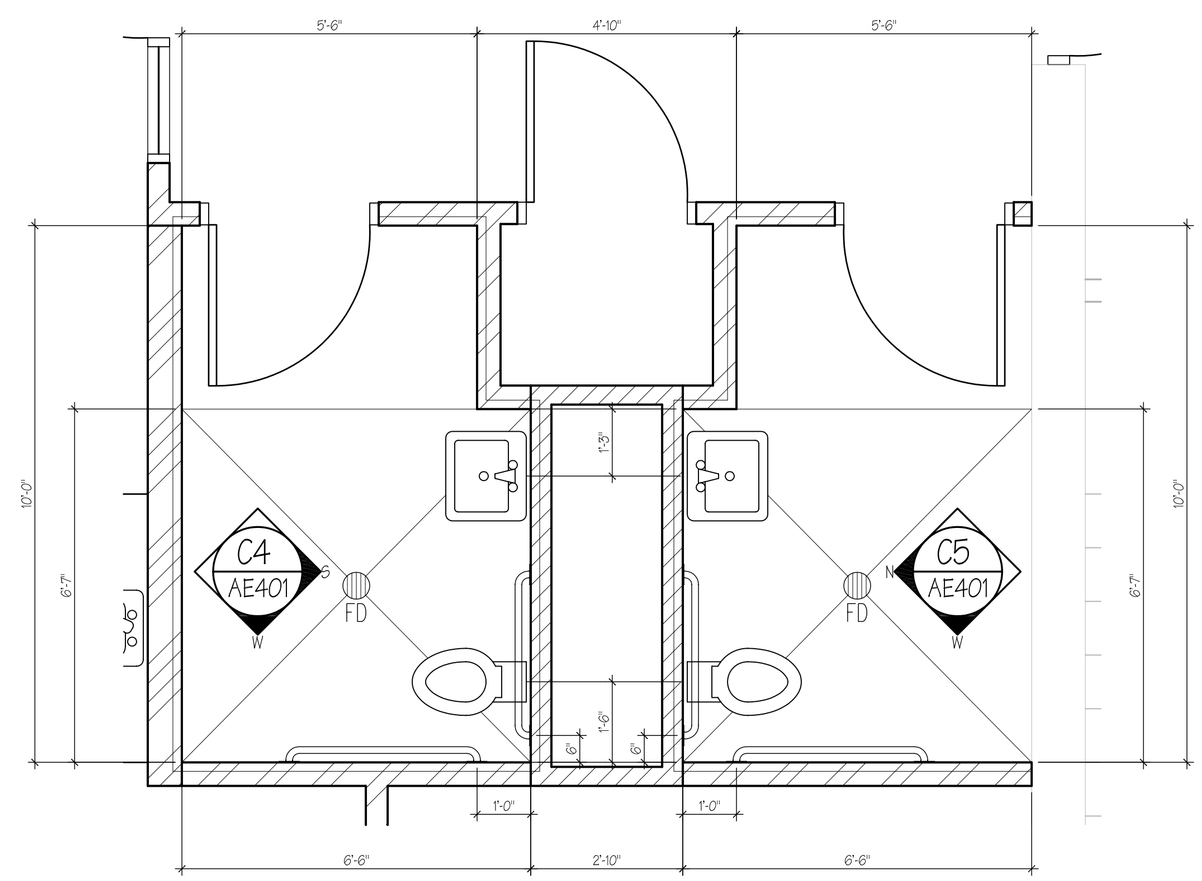

A4 ROOM 205 ENLARGED PLAN
1/2"=1'-0"

A5 ROOM 204 ENLARGED PLAN
1/2"=1'-0"

HFSArchitects
ARCHITECTURE
INTERIORS
PLANNING

1484 South State Street
Salt Lake City, Utah 84115
801-596-0691/F: 596-0693
www.hfsa.com

CONSULTANT

STORES & RECEIVING
BUILDING
EXPANSION / RENOVATION

Weber State University
Ogden, Utah

PROPERTY ID#: 4016

MARK	DATE	DESCRIPTION

DATE:	13 MARCH 2006
AGENCY PROJECT NO:	05276810
HFSA PROJECT NO:	0528.01
CAD DWG FILE NO:	
DRAWN BY:	RLS
CHECKED BY:	BWS
DESIGNED BY:	RLS
DWG TYPE:	ARCHITECTURAL
ARCHITECTURAL PHASE:	CONSTRUCTION BID SET

SHEET TITLE

ENLARGED PLANS
& INTERIOR
ELEVATIONS

AE401

SHEET 13 OF 31

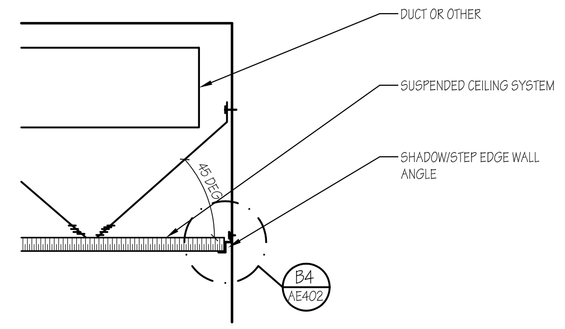

NOTE: WHEN DUCT OR OTHER OBSTRUCTION PREVENTS SPLAY WIRE ATTACHED AT CEILING, OR IF 45□ CANNOT BE ACHIEVED THE USE OF SIDEWALL MAY BE USED.

D5 CEILING DETAIL
2"=1'-0"

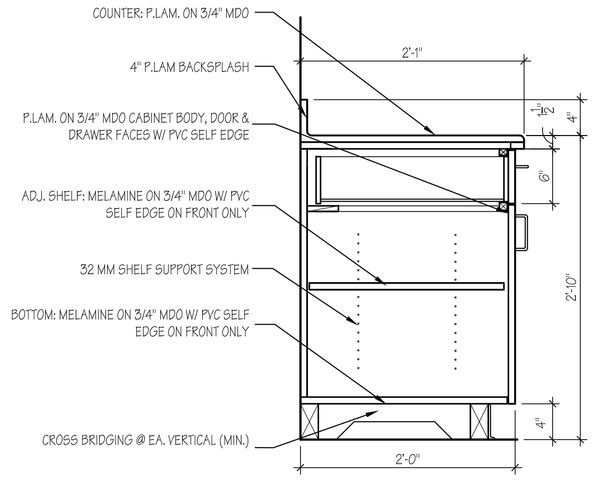

C3 CASEWORK DETAIL
1"=1'-0"

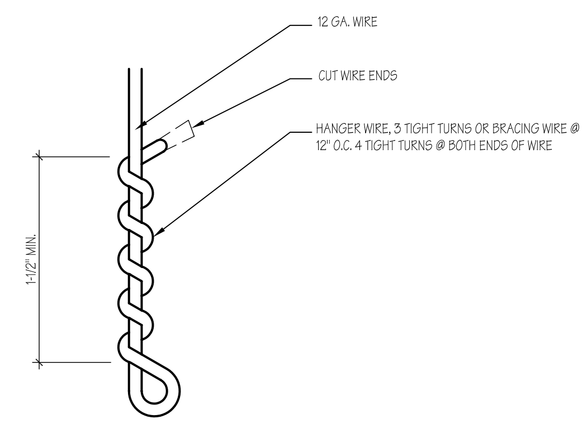

SUSPENDED ACOUSTICAL CEILING HANGER OR BRACE WIRE

C4 CEILING DETAIL
1"=1"

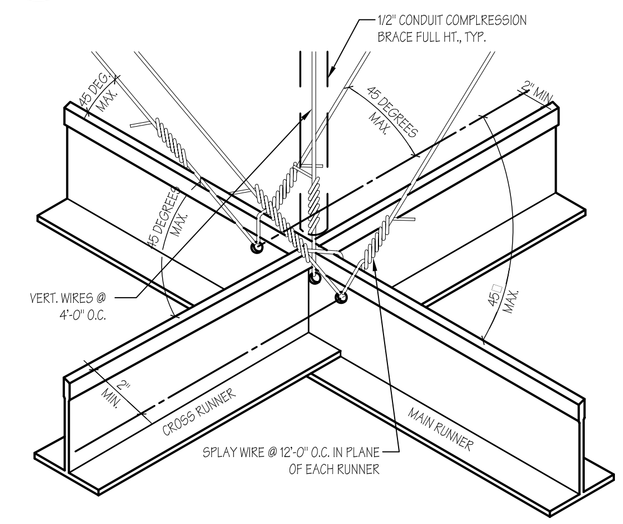

C5 CEILING DETAIL
N.T.S.

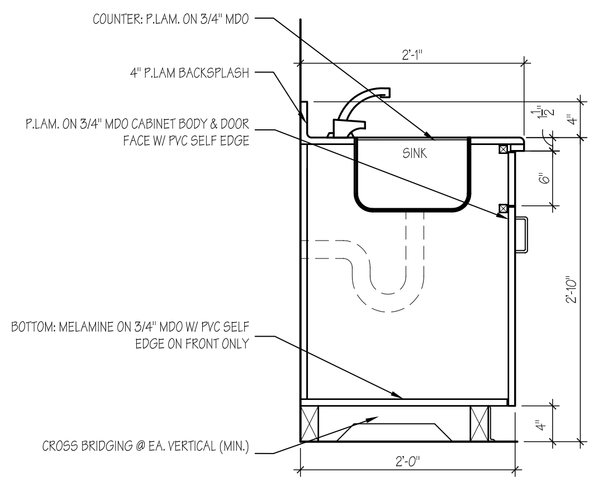

B3 CASEWORK DETAIL
1"=1'-0"

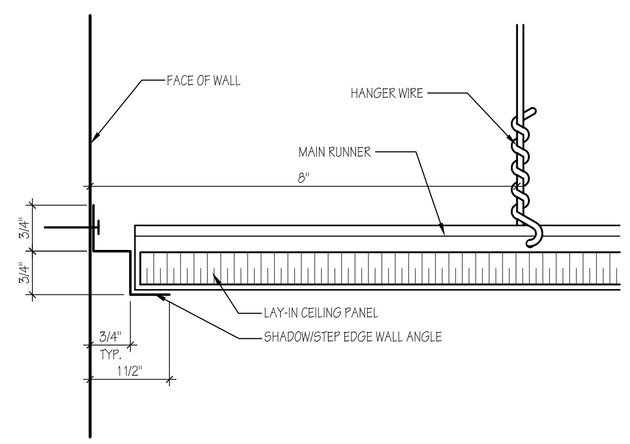

B4 CEILING DETAIL
6"=1'-0"

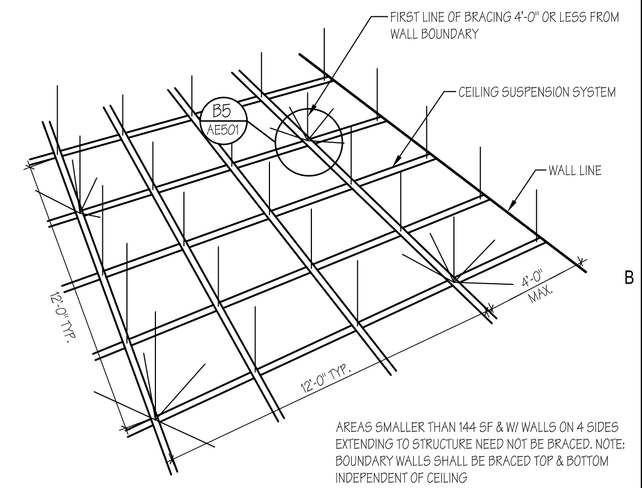

AREAS SMALLER THAN 144 SF & W/ WALLS ON 4 SIDES EXTENDING TO STRUCTURE NEED NOT BE BRACED. NOTE: BOUNDARY WALLS SHALL BE BRACED TOP & BOTTOM INDEPENDENT OF CEILING

B5 CEILING DETAIL
N.T.S.

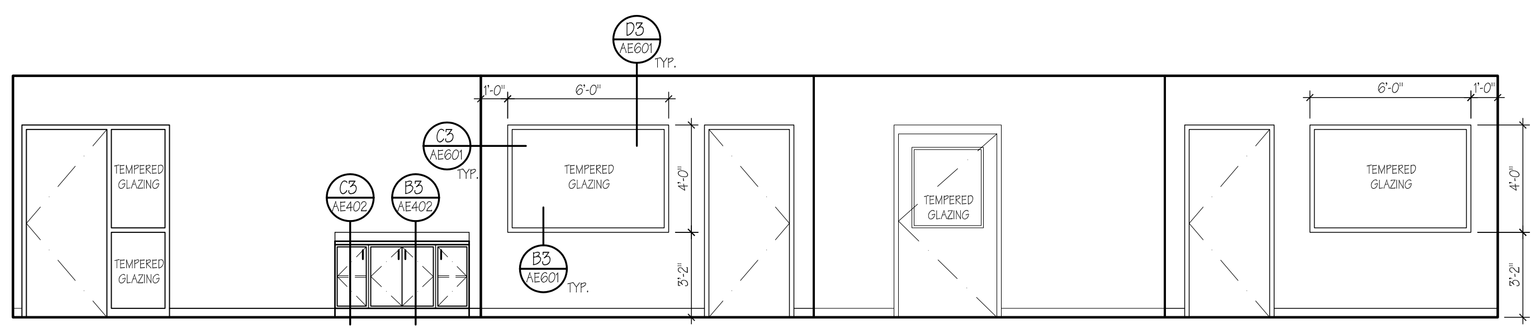

A3 INTERIOR ELEVATION
1/4"=1'-0"

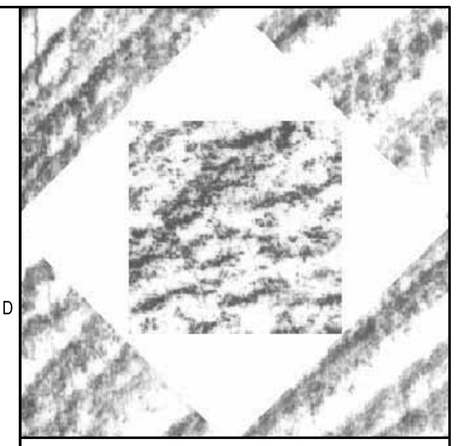

HFS*Architects*

ARCHITECTURE
INTERIORS
PLANNING

1484 South State Street
Salt Lake City, Utah 84115
801-596-0691/F: 596-0693
www.hfsa.com

CONSULTANT

STORES & RECEIVING BUILDING EXPANSION / RENOVATION

Weber State University
Ogden, Utah

PROPERTY ID#: 4016

MARK	DATE	DESCRIPTION

DATE:	13 MARCH 2006
AGENCY PROJECT NO:	05276810
HFSA PROJECT NO:	0528.01
CAD DWG FILE NO:	
DRAWN BY:	RLS
CHECKED BY:	BWS
DESIGNED BY:	RLS
DWG TYPE:	ARCHITECTURAL
ARCHITECTURAL PHASE:	CONSTRUCTION BID SET

SHEET TITLE

INTERIOR ELEVATION, CASEWORK & CEILING DETAILS

AE402

SHEET 14 OF 31

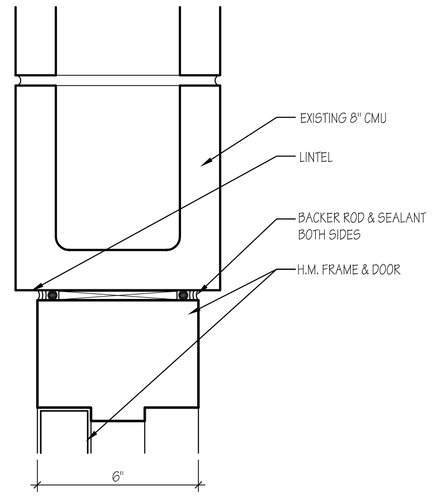

D2 H.M. DOOR HEAD DETAIL
3"=1'-0"

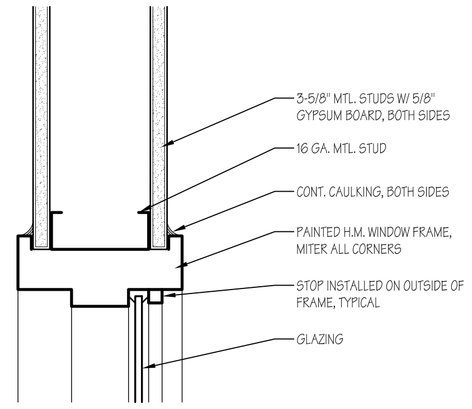

D3 H.M. WINDOW HEAD DETAIL
3"=1'-0"

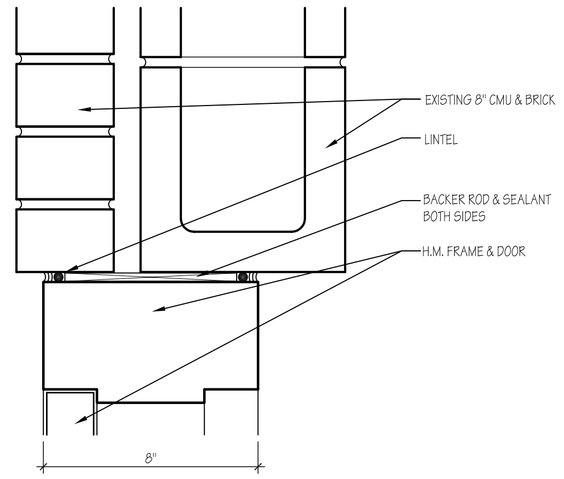

D4 H.M. DOOR HEAD DETAIL
3"=1'-0"

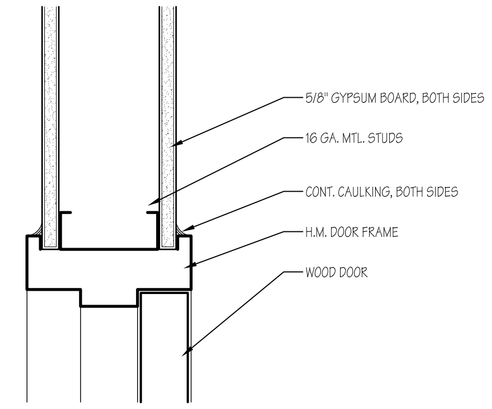

D5 H.M. DOOR HEAD DETAIL
3"=1'-0"

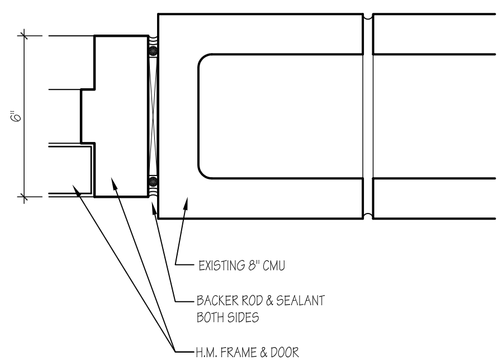

C2 H.M DOOR JAMB DETAIL
3"=1'-0"

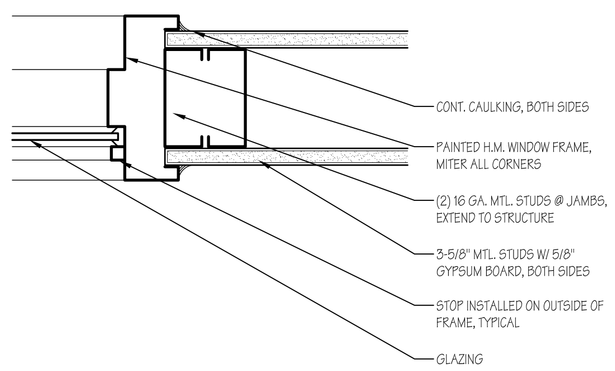

C3 H.M. WINDOW JAMB DETAIL
3"=1'-0"

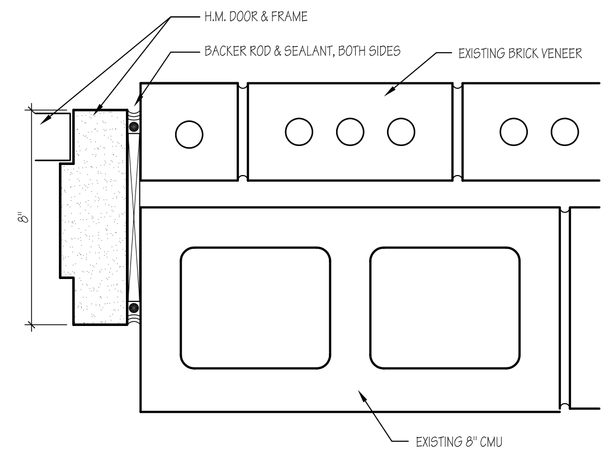

C4 H.M. DOOR JAMB DETAIL
3"=1'-0"

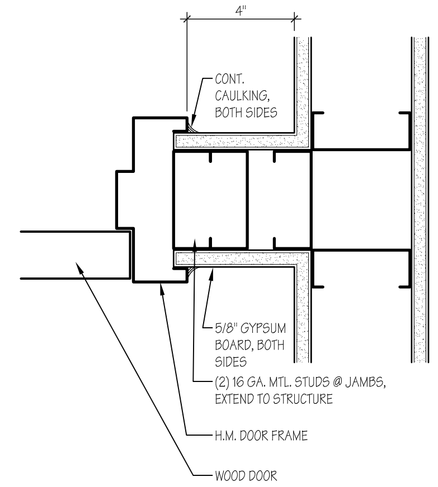

C5 H.M. DOOR JAMB DETAIL
3"=1'-0"

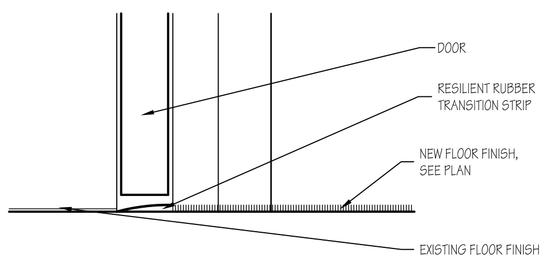

B2 DOOR THRESHOLD DETAIL
3"=1'-0"

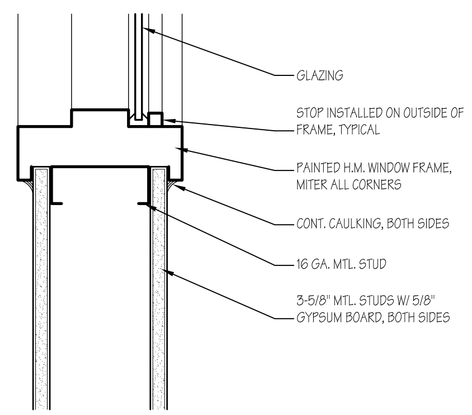

B3 H.M WINDOW SILL DETAIL
3"=1'-0"

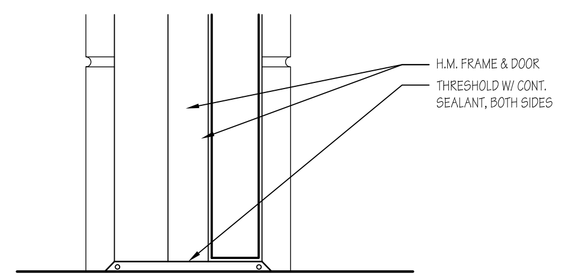

B4 DOOR THRESHOLD DETAIL
3"=1'-0"

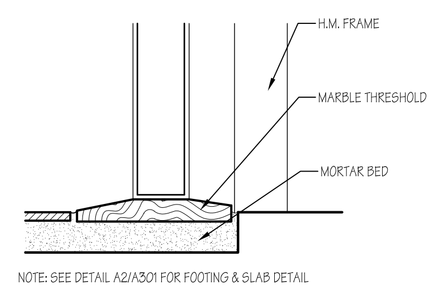

B5 MARBLE THRESHOLD DETAIL
3"=1'-0"

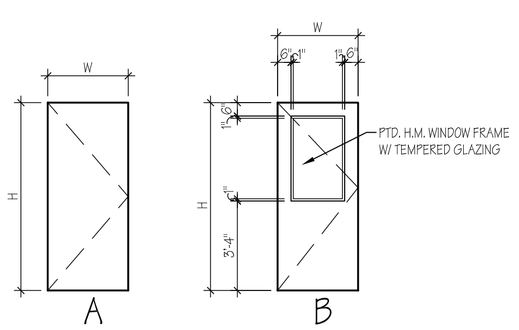

A2 DOOR TYPES
1/4"=1'-0"

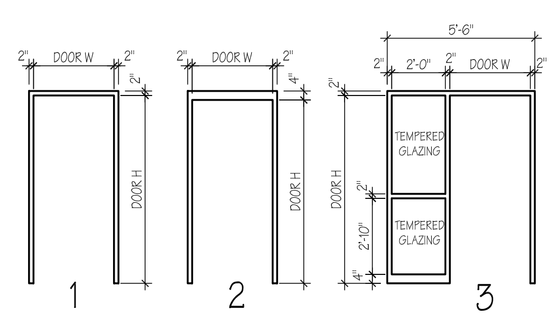

A3 FRAME TYPES
1/4"=1'-0"

DOOR SCHEDULE

DOOR NUMB.	DOOR						FRAME						
	TYPE	MATERIAL	FIINISH	DOOR SIZE			TYPE	MATERIAL	FINISH	UL LABEL	DETAILS		
				W	H	T					H	J	T
103	B	S.C. WOOD	PRE. FIN.	3'-0"	7'-0"	1-3/4"	1	H.M.	PAINT	--	D5/AE601	C5/AE601	B2/AE601
106	A	S.C. WOOD	PRE. FIN.	3'-0"	7'-0"	1-3/4"	2	H.M.	PAINT	--	D2/AE601	C2/AE601	B2/AE601
107	A	S.C. WOOD	PRE. FIN.	3'-0"	7'-0"	1-3/4"	2	H.M.	PAINT	--	D2/AE601	C2/AE601	B2/AE601
201A	B	INSUL. H.M	PAINT	3'-8"	7'-0"	1-3/4"	2	H.M.	PAINT	--	D4/AE601	C4/AE601	B4/AE601
201B	A	S.C. WOOD	PRE. FIN.	3'-0"	7'-0"	1-3/4"	3	H.M.	PAINT	--	D5/AE601	C5/AE601	--
202	A	S.C. WOOD	PRE. FIN.	3'-0"	7'-0"	1-3/4"	1	H.M.	PAINT	--	D5/AE601	C5/AE601	B2/AE601
203	A	S.C. WOOD	PRE. FIN.	3'-0"	7'-0"	1-3/4"	1	H.M.	PAINT	--	D5/AE601	C5/AE601	B2/AE601
204	A	S.C. WOOD	PRE. FIN.	3'-0"	7'-0"	1-3/4"	1	H.M.	PAINT	--	D5/AE601	C5/AE601	B5/AE601
205	A	S.C. WOOD	PRE. FIN.	3'-0"	7'-0"	1-3/4"	1	H.M.	PAINT	--	D5/AE601	C5/AE601	B5/AE601
206	A	S.C. WOOD	PRE. FIN.	3'-0"	7'-0"	1-3/4"	1	H.M.	PAINT	--	D5/AE601	C5/AE601	--
207	B	S.C. WOOD	PRE. FIN.	3'-0"	7'-0"	1-3/4"	2	H.M.	PAINT	--	D2/AE601	C2/AE601	--
208	A	S.C. WOOD	PRE. FIN.	3'-0"	7'-0"	1-3/4"	1	H.M.	PAINT	--	D5/AE601	C5/AE601	B2/AE601
209A	A	S.C. WOOD	PRE. FIN.	3'-0"	7'-0"	1-3/4"	2	H.M.	PAINT	--	D2/AE601	C2/AE601	--
209B	B (PAIR)	INSUL. H.M	PAINT	2'-10"	7'-0"	1-3/4"	2	H.M.	PAINT	--	D4/AE601	C4/AE601	B4/AE601

A4 DOOR SCHEDULE
N.T.S.

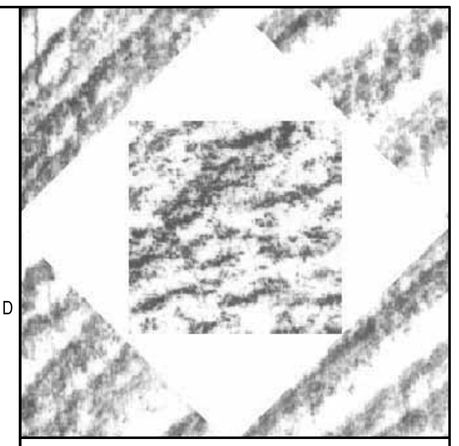

HFSArchitects
ARCHITECTURE
INTERIORS
PLANNING
1484 South State Street
Salt Lake City, Utah 84115
801-596-0691/F: 596-0693
www.hfsa.com

CONSULTANT

STORES & RECEIVING BUILDING EXPANSION / RENOVATION

Weber State University
Ogden, Utah

PROPERTY ID#: 4016

MARK	DATE	DESCRIPTION

DATE:	13 MARCH 2006
AGENCY PROJECT NO:	05276810
HFSA PROJECT NO:	0528.01
CAD DWG FILE NO:	
DRAWN BY:	RLS
CHECKED BY:	BWS
DESIGNED BY:	RLS
DWG TYPE:	ARCHITECTURAL
ARCHITECTURAL PHASE:	CONSTRUCTION BID SET

SHEET TITLE

DOOR SCHEDULE, DOOR & WINDOW DETAILS

AE601

SHEET 15 OF 31

BASIS OF DESIGN

```
1. BUILDING CODE ..........................    2003 IBC
2. BUILDING CLASSIFICATION CATEGORY .......      II
3. GRAVITY DESIGN:
   DEAD LOADS
     Roofs ................................      20 psf
   SNOW LOADS
     Snow load on flat roof,         Pf ....      30 psf
     Importance factor:              Is ....     1.0
     Exposure factor:                Ce ....     1.0
     Thermal factor:                 Ct ....     1.0
   LIVE LOADS
     Floor ................................     100 psf
4. WIND DESIGN:
     Basic wind speed .....................     100 mph
     Importance factor:              Iw  ...     1.0
     Exposure .............................       C
     Components and cladding ..............    15.3 psf
5. SEISMIC DESIGN:
     Analysis procedure:    EQUIVALENT LATERAL FORCE
     Importance factor:              Ie  ...     1.0
     Spectral response accelerations: Ss  & S1   1.797 & 0.78
     Site class ...........................       D
     Spectral response coefficients:  SDs & SD1  1.0 & 0.6
     Seismic Design Category ..............       E
     Basic Seismic-Force-Resisting System:
             Bearing walls special reinforced masonry walls
     Response modification factor:   R ....       5
     Seismic response coefficient:   Cs  ...     0.200
6. SOILS:
     Soil bearing pressure (Assumed).......    1500 psf
     Lateral earth pressure ...............      45 psf
     Minimum frost cover ..................      30 inches
7. ABBREVIATIONS:
     EOR = Engineer of record.  See professional stamp this page.
     UNO = Unless noted otherwise
     (E) = Existing condition
     (N) = New construction
```

GENERAL

1. THE GENERAL CONTRACTOR SHALL:
   A. Be familiar with the contract documents and insure that subcontractors are familiar with their portion of the work. Submit a written request to the Arch/EOR for approval before proceeding with any changes.
   B. Verifies site conditions and dimensions at the site. If they differ from the contract documents, notify the Arch/EOR prior to fabrication/construction of affected elements. Existing condition information on the drawings is based on best knowledge acquired during the design phase and may differ from actual conditions. Affected details may require redesign.
   C. Report to the Arch/EOR modifications made to the structure.
   D. Be responsible for safety and protection on and around the job site and adjacent properties.

2. THE GENERAL CONTRACTOR SHALL COORDINATE:
   A. And verify locations, weights and sizes of mechanical units, equipment, etc. prior to the fabrication and erecting of structural supporting elements. Report sizes and locations that differ from those shown on the drawings to the Arch/EOR for review. Additional framing maybe required.
   B. Roof, floor, and wall openings required for mechanical, etc. which are not shown on the structural drawings with the Arch/EOR.
   C. Any structural situation not covered by the drawings with the Arch/EOR.
   D. Doors, windows, walls, elevations, slopes, stairs, curbs, drains, recesses, depressions, railings, waterproofing, finishes, chamfers, kerfs, pads, landscape walls, trenches in slabs, etc. with the structural work.
   E. Inspections, testing, and structural observations as work proceeds. Notify the EOR 48 hours prior to any required structural observations.

3. CONTRACT DOCUMENTS & DRAWINGS:
   A. These structural notes complement the specifications and the drawings.
   B. Specific details, sections and notes shown on the drawings govern over these general notes and typical details.
   C. Contract documents take precedence over shop drawings, UNO.
   D. Apply typical or similar details, sections and notes to similar situations on the drawings where specific details are not referenced.
   E. Drawings and details have been prepared to visually represent information provided in scaled form. However, DO NOT scale plans or details for dimensional information.
   F. Refer to architectural drawings for dimensions.

4. BUILDING CODE COMPLIANCE: Construction, inspection, materials, testing, and workmanship shall conform to the requirements of the governing building code.

5. CONSTRUCTION SEQUENCE, SHORING, AND BRACING REQUIREMENTS: The general contractor is responsible for the method, means, and sequence of structural erection, UNO. He shall provide adequate temporary shoring or bracing for all structural elements until the entire structural system is completed. Design of shoring and bracing is by others at no additional cost to the owner.

6. OMISSIONS, CONFLICTS & DISCREPANCIES:
   A. Bring omissions, conflicts or discrepancies between the elements of the contract documents to the attention of the Arch/EOR before proceeding with work involved.
   B. In case of conflicts or discrepancies, follow the most stringent requirements as directed by the Arch/EOR.

7. MISCELLANEOUS:
   A. During and after construction, builder and/owner shall keep loads on the structure within the limits of this design. See Basis of Design.
   B. Site observations by ES2's field representative shall neither be construed as inspection nor approval of construction..

8. SUBMITTALS:
   A. Make submittals in a timely manner. ES2's review is for general compliance only and is not intended as approval. Contractor is responsible for verifying sizes, dimensions and elevations on submittals as related to the contract documents.
   B. Submit the following items for review prior to proceeding with the work:

```
   Concrete material Certifications & mix designs.
   Shop Drawings: Reinforcing steel
                  Steel deck
                  Structural steel
   Special loads on the structure.
   Roof, floor and wall openings not shown on the drawings.
   Welding procedures and certifications.
```

   C. Allow two weeks for the review of submittals by the EOR.
   D. Have EOR approved shop drawings & materials on site before construction of those components begin.
   E. Substitutions are not allowed unless approved by the EOR. Submit requests for structural substitutions to the Arch/EOR.

SPECIAL INSPECTION AND TESTING

1. INSPECTIONS: Provide special inspection by an independent agency in accordance with IBC Chapter 17 and as outlined below:

```
   Anchor bolts and concrete.
   Concrete: during pours, rebar placement, and taking of test specimens.
             Inspectors shall be ACI-II or ICC certified.
   Reinforcing steel: in concrete.
   Soils: bearing materials and placement of structural fill.
   Steel Deck: (periodic)
   Steel to steel bolting: all high strength bolts.
   Welding: all field welds.  Inspector shall be AWS-QC1 certified.
```

2. TESTING: The owner will provide testing by qualified testing personnel for the following types of construction:

```
   Bolting:  installation and correct torque and/or tension.
   Concrete: strength, slump, air, and temperature.
   Soils:    compaction.
   Welding:  type, size, length, and quality of shop and all field welds
by approved methods.
```

3. THE CONTRACTOR SHALL:
   A. Coordinate testing. DO NOT proceed with subsequent work until inspections and testing has been approved.
   B. Copy inspection reports/testing results to the Arch/EOR and owner before work proceeds.
   C. Correct deficient work at no additional cost to the owner.

CONCRETE

1. CODES AND STANDARDS. Comply with the following Codes:
   A. ACI 301, "Specifications for Structural Concrete for Buildings".
   B. ACI 318, "Building Code Requirements for Reinforced Concrete".
   C. ACI 347, "Recommended Practice for Concrete Form Work".

2. MATERIALS shall conform to the following:
   A. Cement; ASTM C150, Type I, Portland Cement.
   B. Hard rock aggregates: ASTM C33
   C. Water shall be potable.
   D. Air entrainment: ASTM C260
   E. Fly ash: ASTM C618
   F. Calcium chloride SHALL NOT be used.

3. MIX DESIGNS:
   A. Place only one type of concrete at any given time.
   B. The maximum slump shall be 4" w/o plasticizer added.
   C. Use pea gravel and/or plasticizer in congested areas.
   D. Limit fly ash to 20% of the total cement.
   E. Concrete mixes shall conform to the following:

TYPE OF CONCRETE MEMBER	28 DAY STRENGTH (psi)	MAX. W/C (ratio)	MAX. DRY WEIGHT (pcf)	MAX. AGGREGATE SIZE (inches)	AIR (%)
Footings:	4000	0.50	150	3/4	3 ±1
Slabs on grade:					
Interior	3000	0.50	150	1.5*	0 to 2
Exterior	4000	0.47	150	1.5*	6 ±1
Concrete poured over steel deck:					
Normal Wt.	3000	0.45	150	3/4	0 to 3
Walls:	4000	0.45	150	3/4	3 ±1

*Well-graded Aggregates required (1.5"=> course >3/8", medium, and fines <#8) Follow ACI 302 for sand gradation.

4. CONSTRUCTION:
   A. Mechanically vibrate concrete during placement.
   B. Prior to placing concrete, check with trades to insure proper placement of openings, block outs, sleeves, curbs, conduits, bolts, inserts, embeds, dowels, etc. Place anchor bolts and dowels prior to casting concrete, UNO.
   C. Add additional reinforcing too sides of floor and wall opening, equivalent to the bars cut by the opening with half to each side of the opening or (2) #5 bars, whichever is greater, UNO. Bars parallel to the principal reinforcing shall run full length of the span. End bars in the other direction with a standard hook. Add (2) #5 x 5'-0" diagonal bars at every corner.

5. SLABS ON GRADE (SOG):
   A. Minimum slab on grade requirements:
      6 inches thickness.
      6 inch layer of free-draining gravel base.
      #4 bars at 18" o.c. both ways, UNO. Chair rebar for proper placement.
   B. See Architectural for exterior slabs on grade, UNO.

REINFORCING STEEL

1. CODES AND STANDARDS. Comply with:
   a. CRSI "Manual of Standard Practice".
   b. ACI "Detailing Manual", ACI 315 (or SP-66).

2. MATERIALS:
   A. New stock deformed rebar: ASTM A615, Grade 60, except as noted.
      a. Field bent dowels: ASTM A615, Grade 40 or ASTM A706, Grade 60, Low-Alloy Steel. Reduce spacing of grade 40 dowels by 1/3.
      b. Welded rebar: ASTM A706, Grade 60, Low-Alloy Steel.

3. CONSTRUCTION:
   A. Detail, bolster, and support all rebar. Tie bars securely with proper clearances before casting concrete.
   B. Use rebar free of loose flaky rust, scale, grease, oil, dirt, and other materials, which affect or impair bond.
   C. Place rebar continuous in walls, beams, columns, slabs, footings, etc.
   D. Minimum lap splices (Inches): (Minimum lap 24")

	#3	#4	#5	#6	#7	#8	#9	#10	#11
Concrete:	24"	24"	24"	33"	53"	66"	80"	96"	113"

   E. Make cold bends. DO NOT use heat. Bends in the fabricator's shop, UNO. DO NOT unbend or rebend a previously bent bar.
   F. Minimum concrete cover: (securely position and anchor rebar prior to pour)

```
      Cast against and permanently exposed to earth ..      3"
      Exposed to earth or weather:
         #6 and larger ...............................      2"
         #5 and smaller ..............................  1-1/2"
      NOT exposed to earth or weather:
         Slabs, walls and joist, #11 & smaller .......    3/4"
         Slabs-On-Grade (SOG) .............    Center of slab, UNO
```

   H. DO NOT weld reinforcing unless specifically noted. Use E-90XX electrodes and ASTM A706 reinforcing. Comply with AWS requirements.
   I. Use epoxy coated reinforcing when specifically noted. Increase lap splice lengths by a factor of 1.2.

STEEL DECK

1. PRODUCT:
   A. See plans for deck size and gauge, etc.
   B. Manufacture deck and accessories from cold rolled steel conforming to ASTM A-446 Grade A (galvanized G-60) and conform to the Steel Deck Institute and AISC Standards.

2. CONSTRUCTION:
   A. Install deck with a minimum of 3 spans, UNO. Where such layout is impossible, decking must meet design criteria for simple span condition.
   B. Provide 2" minimum deck bearing and 4" lap at splice locations. Provide structural support (angles, etc.) around the perimeter of all deck openings.
   C. DO NOT bend or mar deck.
   D. Store decking off the ground with one end elevated. Cover with waterproof material and ventilate to avoid condensation.

3. DECK WELDING REQUIREMENTS:
   A. See plans for welding pattern.
   B. Weld to framing members with E60XX or E70XX electrodes.
   C. Use 3/4" diameter puddle welds. Penetrate all deck layers with weld metal and have proper fusion to the supporting steel.
   D. Crimp side seams before welding side laps or use Verco's Punchlok system w/ connections @ 12" o.c. max. Engage all layers of the deck material.
   E. Overlap end laps at least 2" directly over a single steel support. Place welds 1" from the edge of the deck or more.
   F. Welds 3/8" x 1.5" long may replace 3/4" diameter welds.

STRUCTURAL STEEL

1. CODES AND STANDARDS: Comply with:
   A. AISC "Specification for Structural Steel Buildings & Commentary".
   B. AISC "Code of Standard Practice" excluding sections 7.5.4, and 7.11.5.
   C. AWS "Structural Welding Code", exclude items conflicting with AISC.

2. MATERIALS SHALL CONFORM AS FOLLOWS:
   A. Wide Flange beams: ASTM A992 Fy = 50 ksi.
   B. Wide Flange columns: ASTM A992 Fy = 50 ksi.
   C. Other shapes & plates: ASTM A53 Fy = 36 ksi.
   D. Hollow Structural Sections: ASTM A500, Fy = 46 ksi, Gr. B.
   F. High strength bolts: ASTM A325.
   G. Anchor rods: ASTM F1554 Fy = 36 ksi.
   H. Other bolts: ASTM A307 or better.
   I. Welded anchors (studs) and deformed bar anchors (DBA's): manufacturer's specifications. DO NOT substitute reinforcing for DBA's.

3. CONSTRUCTION:
   A. Fabricate in an approved fabricator's shop.
   B. Fabricate beams with incidental camber up, UNO.
   C. Use 6000 psi (minimum at 28-day) non-shrink liquid grout beneath bearing plates. Place grout per manufacturer's recommendations prior to loading member.
   D. Add deformed bar anchors to structural sections embedded in concrete or masonry, UNO. Use the same size and spacing as the adjacent reinforcing bars. Minimum length of bars shall be 48 bar diameters but not less than 24 inches.

4. BOLTED CONNECTIONS:
   A. Use 3/4" diameter bolts in Std. holes (bolt diameter + 1/16"), UNO.
   B. Steel-to-steel connections: Use ASTM A325 type "N" connections, UNO.
   C. Other connections: Use ASTM A307 bolts or better except for anchor rods, UNO.
   D. Use hardened washers beneath the turned element of the bolt or nut. Use beveled hardened washers where the outer face of bolted parts has a slope greater than one in twenty with respect to the plane normal to the bolts axis. At oversized holes, use hardened washers or plates at least 5/16" thick conforming to ASTM F436.
   E. Tighten bolts until all plies of the joint are in firm contact. Snug tight condition, UNO.
   F. Enlarge bolt holes by reaming. DO NOT torch cut.

5. WELDED CONNECTIONS:
   A. Perform welding and cutting by AWS certified welders in accordance with ANSI/AWS D1.1 (latest edition).
   B. For typical shop & field welds, use filler metals with nominal 70 ksi tensile strength having:
      a. Matching material for multiple pass welds.
      b. A diffusible hydrogen limit of H16 or less.
      c. A CVN toughness of 20 ft-lbs at 0 deg. F.
   C. Use pre-qualified procedures.
   D. Weld intersecting steel shapes together, which are not connected with bolts, with all-around fillet welds, UNO.
   E. Weld studs and DBA's according to Manufacturer's specs.
   F. Wherever possible use shop welds. The contractor shall coordinate field and shop welds between shop fabrication and the steel erector.
   G. Remove slag from welds.

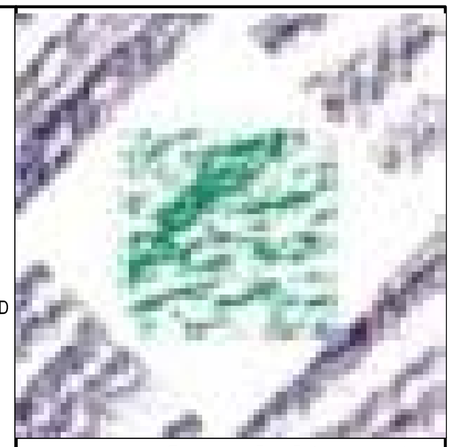

HFSArchitects
ARCHITECTURE
INTERIORS
PLANNING
1484 South State Street
Salt Lake City, Utah 84115
801-596-0691/F: 596-0693
www.hfsa.com

CONSULTANT

STRUCTURAL ENGINEERING SOLUTIONS
ES2
ENGINEERING STRUCTURAL SOLUTIONS
442 NORTH MAIN STREET
BOUNTIFUL, UTAH 84010
Phone: (801) 298-1118
Fax: (801) 298-1122
REGISTERED PROFESSIONAL ENGINEER No.189660 CLIFF R. COLE STATE OF UTAH

STORES & RECEIVING BUILDING EXPANSION / RENOVATION

Weber State University
Ogden, Utah

MARK	DATE	DESCRIPTION

DATE:	13 MARCH 2006
AGENCY PROJECT NO:	05276810
HFSA PROJECT NO:	0528.01
CAD DWG FILE NO:	
DRAWN BY:	NT
CHECKED BY:	CC
DESIGNED BY:	BK
DWG TYPE:	STRUCTURAL
ARCHITECTURAL PHASE:	CONSTRUCTION BID SET

SHEET TITLE

GENERAL NOTES

SG101

SHEET 2 OF 31

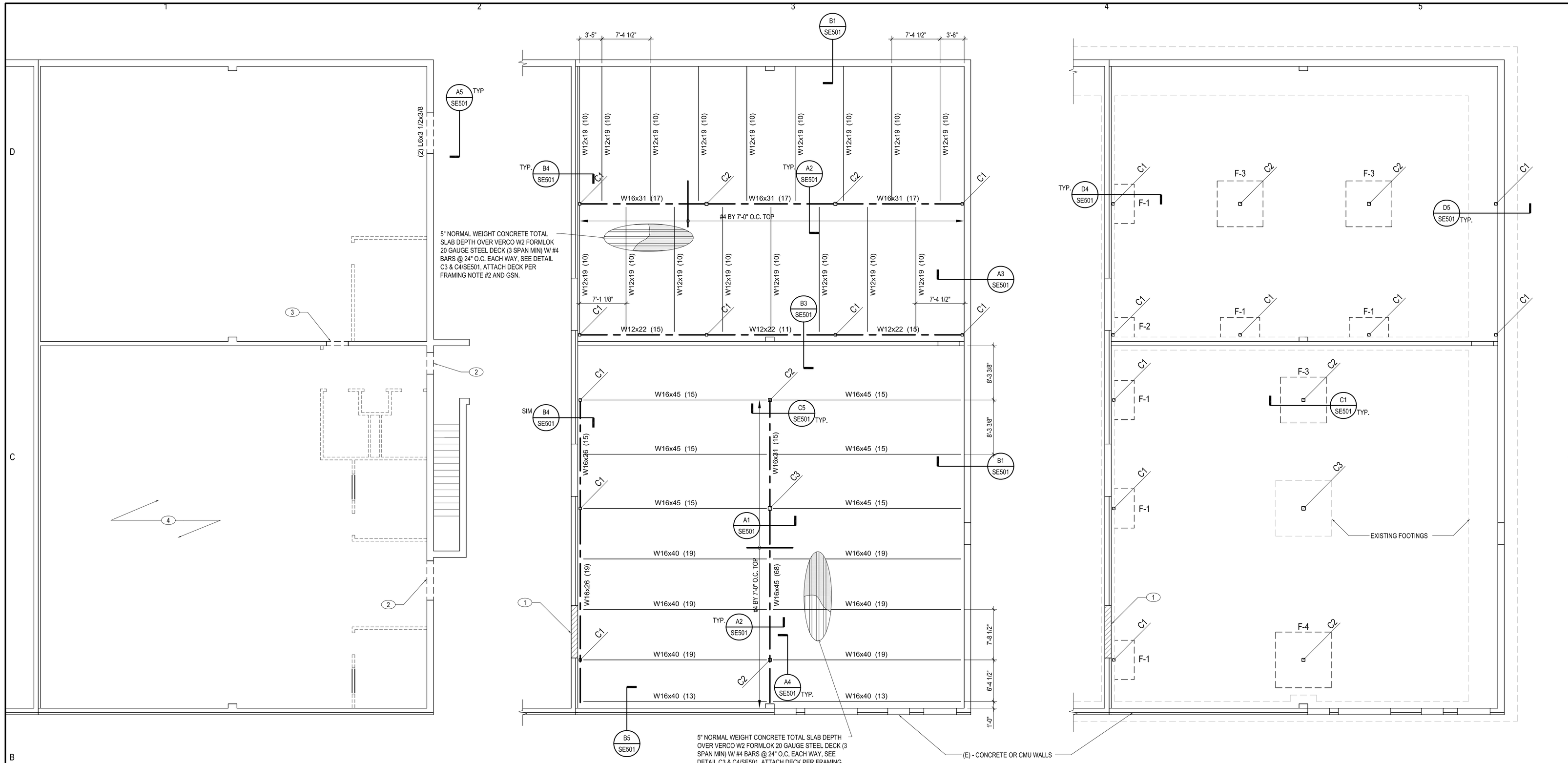

UPPER FLOOR PLAN — SCALE: 1/8" = 1'-0"

FLOOR FRAMING PLAN — SCALE: 1/8" = 1'-0"

FOOTING & FOUNDATION PLAN — SCALE: 1/8" = 1'-0"

PLANNOTES:

1. SEE ARCHITECURAL PLAN TO VERIFY ALL TOP OF STEEL ELEVATIONS.
2. FLOOR DECK ATTACHMENT SHALL BE AS FOLLOWS UNO, SEE C4/SE501
   - (4) 5/8"Ø PUDDLE WELDS PER SHEET AT ENDS, END LAPS, INTERMEDIATE SUPPORTS AND DRAG LINES/COLLECTORS.
   - 5/8"Ø PUDDLE WELDS AT 12" O.C. AT PERIMETER SUPPORTS, AND EDGES OF OPENINGS PARALLEL WITH DECK.
   - SIDE SEAM ATTACHMENT SHALL BE BUTTON PUNCHES AT 12" O.C.
3. "W12x19 (24)", "W16x31 (26)", ... INDICATES WIDE FLANGE SHAPES W/ NUMBER OF UNIFORMLY SPACED 3/4"Ø x 4-1/2" SHEAR STUDS IN PARENTHESES.
4. EVERY FRAMING DETAIL ON THESE PLANS DOES NOT REFERENCE A GIVEN SECTION. WHERE NO DETAILS ARE SHOWN, CONSTRUCTION SHALL CONFORM TO SIMILAR WORK SHOWN IN THESE DOCUMENTS.

KEYED NOTES:

1. INFILL WALL AS REQUIRED WITH MASONRY BLOCK, MATCH SIZE OF EXISTING WALL, SEE ARHCITECTURAL.
2. NEW OPENING IN EXISTING WALL WHERE BREAKOUT WALL OCCURS. SEE LINTEL SCHEDULE THIS SHEET.
3. NEW OPENING IN EXISTING WALL, SEE LINTEL SCHEDULE THS SHEET AND DETAIL A5/SE501
4. ADDITIONAL LOADS TO ROOF NEED TO BE COORDINATED W/ EOR TO DETERMINE IF ANY ADDITIONAL REINFORCEMENT IS REQUIRED FOR EXISTING ROOF STRUCURE. (E) ROOF FRAMING PLAN, NOT SHOWN ON DRAWINGS.

STEEL ANGLE LINTELS

CLEAR OPENING	ANGLE SIZE
UP TO 6'-0"	3 1/2"x 3 1/2"x 5/16"
6'-0" TO 7'-0"	4"x 3 1/2"x 5/16"
7'-0" TO 8'-0"	5"x 3 1/2"x 5/16"
8'-0" TO 9'-0"	6"x 3 1/2"x 5/16"
9'-0" TO 10'-0"	6"x 3 1/2"x 1/2"

6" MINIMUM BEARING W/ 1 ADDITIONAL INCH PER FOOT OVER 6' OF OPENING. LINTELS OPENINGS OVER 10'-0" SPAN REQUIRES INDIVIDUAL ANALYSIS. CONTACT EOR, SEE DETAIL A5/SE501.

STEEL COLUMN SCHEDULE

MARK	SIZE	BASE PLATE	CAP PLATE 3/4" THICK, U.N.O.	NOTES
C-1	HSS 5x5x1/4	11x11x3/4	SEE DETAILS FOR DIMENSIONS	A.B. @ FND. (4)-3/4"Øx1'-0" J-ANCHORS
C-2	HSS 7x7x1/4	14x14x3/4	SEE DETAILS FOR DIMENSIONS	A.B. @ FND. (4)-3/4"Øx1'-0" J-ANCHORS
C-3	EXISTING			

HSS = HOLLOW STEEL SECTION UNO = UNLESS NOTED OTHERWISE

NOTE:
1. (E) STEEL COLUMNS ARE CONTINUED FROM FOUNDATION TO ROOF, UNO.
2. (N) STEEL COLUMNS ARE SINGLE STORY FROM FOUNDATION TO BOTTOM OF (N) FLOOR.

FOOTING SCHEDULE

MARK	SIZE			BOTTOM REINFORCING	TOP REINFORCING	NOTES
	WIDTH	LENGTH	THICK			
F-1	3'-0"	6'-0"	12"	(3) #5 L.W. & (6) #5 C.W.	NONE	SEE DETAILS
F-2	3'-0"	3'-0"	12"	(4) #5 E.W.	NONE	SEE DETAILS
F-3	7'-0"	7'-0"	12"	(7) #5 E.W.	NONE	SEE DETAILS
F-4	8'-6"	8'-6"	15"	(9) #6 E.W.	NONE	SEE DETAILS

C.W. = CROSSWISE E.W. = EACH WAY L.W. = LENGTHWISE

NOTES:
1. ALL FOOTINGS ARE MARK F-1, U.N.O.,
2. BEAR FOOTINGS ON PROPERLY PREPARED MATERIAL.
3. BEAR EXTERIOR FOOTINGS BELOW THE EFFECTS OF FROST.
4. CENTER FOOTINGS BELOW THE WALL AND/OR COLUMN ABOVE. TYPICAL UNO.
5. PROVIDE 2x4 BEVELED KEYWAYS IN CONTINUOUS WALL FOOTINGS. UNO
6. PROVIDE 3" CLEAR CONCRETE COVER AT BOTTOM REINF., UNO.
7. PROVIDE DOWELS WITH STANDARD HOOK FROM FOOTINGS TO ANY REINFORCED ELEMENT ABOVE. DOWEL SIZE TO MATCH VERTICAL REINFORCING IN ELEMENT ABOVE. UNO
8. ANY INCREASE IN THE SIZE OF FOOTINGS FOR CONSTRUCTION CONVENIENCE, MAY REQUIRE ADDITIONAL REINFORCING. COORDINATE WITH THE EOR
9. ALL FOOTINGS TO BEAR ON COMPACTED SUBGRADE.

HFSArchitects
ARCHITECTURE
INTERIORS
PLANNING
1484 South State Street
Salt Lake City, Utah 84115
801-596-0691/F: 596-0693
www.hfsa.com

CONSULTANT
STRUCTURAL ENGINEERING SOLUTIONS
ENGINEERING STRUCTURAL SOLUTIONS
442 NORTH MAIN STREET
BOUNTIFUL, UTAH 84010
Phone: (801) 298-1118
Fax: (801) 298-1122
REGISTERED PROFESSIONAL ENGINEER No.189660 CLIFF R. COLE STATE OF UTAH

STORES & RECEIVING BUILDING EXPANSION / RENOVATION

Weber State University
Ogden, Utah

MARK	DATE	DESCRIPTION

DATE:	13 MARCH 2006
AGENCY PROJECT NO:	05276810
HFSA PROJECT NO:	0528.01
CAD DWG FILE NO:	
DRAWN BY:	NT
CHECKED BY:	CC
DESIGNED BY:	BK
DWG TYPE:	STRUCTURAL
ARCHITECTURAL PHASE:	CONSTRUCTION BID SET

SHEET TITLE

FOOTING & FOUNDATION & FLOOR FRAMING PLANS

SE101

SHEET 3 OF 31

D1 = 6d for #3 thru #8
D1 = 8d for #9 thru #11 (#11 bar Max. for MASONRY)
D1 = 10d for #14 and #18

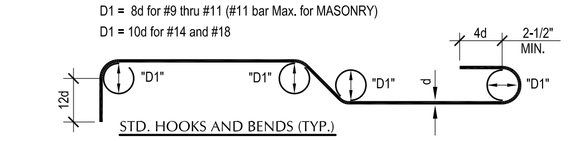

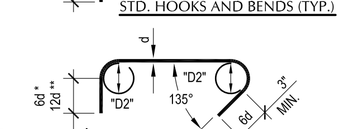

D2 = 4d for #3 thru #5
D2 = 6d for #6 thru #8
* = #3 thru #5
** = #6 thru #8

STIRRUP & TIE HOOKS (TYP.)

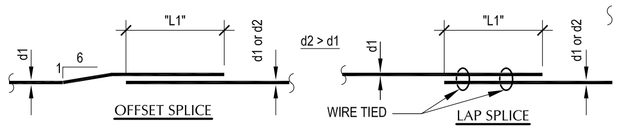

MARK	WALL TYPE	LAP LENGTH	MIN. LAP LENGTH
L1	CONCRETE	30d2 for 40 GRADE	2'-0"
L1	CONCRETE	40d2 for 60 GRADE	2'-0"
L1	MASONRY	48d2	2'-0"

D1 SE501 TYPICAL HOOKS & BENDS
NO SCALE

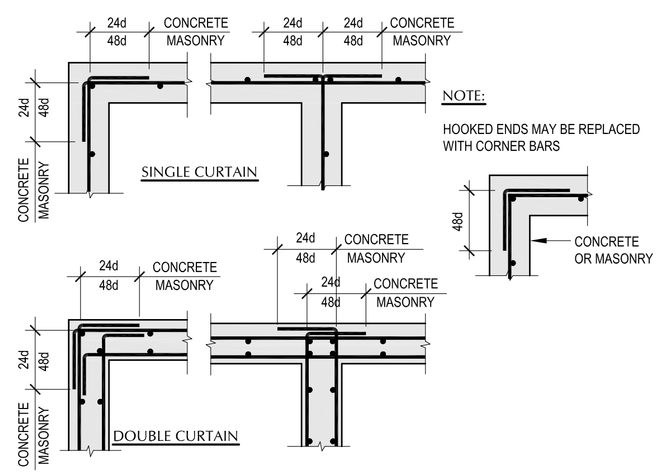

NOTE:
HOOKED ENDS MAY BE REPLACED WITH CORNER BARS

D2 SE501 CONCRETE OR MASONRY WALL CORNER REINF.
NO SCALE

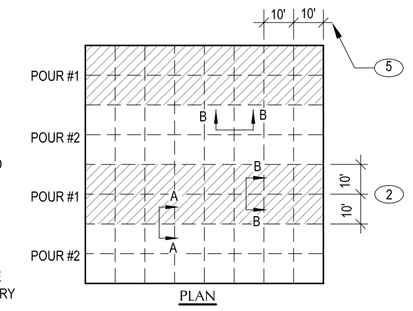

KEYNOTES:

1. SLAB REINFORCING
2. MAX. WIDTH OF POUR = 20'-0"
3. 1/8" FIBERBOARD STRIP, ZIP STRIP, OR SAW CUT, SEE SPECIFICATIONS. AT EXPOSED SLOT WITH SLAB, USE 1/4" JOINT SEALER.
4. FOR SLABS LEFT EXPOSED, PROVIDE 1/4" WIDE SLOT FILLED WITH JOINT SEALER.
5. MAX. LENGTH OF POUR WITHOUT CONTROL JOINT = 10'-0" COORDINATE JOINT LOCATIONS WITH ARCHITECTS REQUIREMENTS

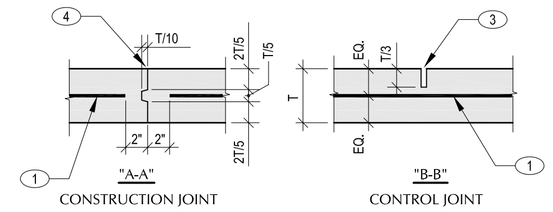

D3 SE501 SLAB ON GRADE JOINT
NO SCALE

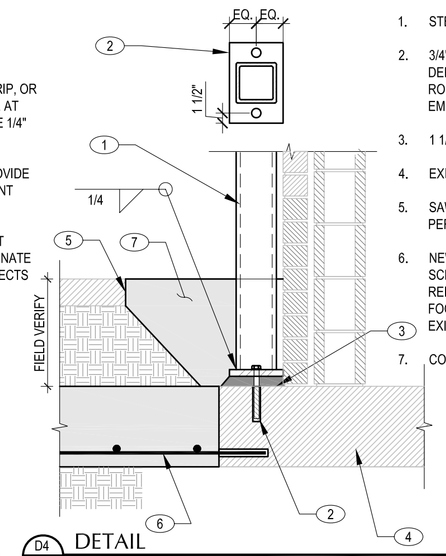

KEYNOTES:

1. STEEL COLUMN, SEE PLAN
2. 3/4" BASE PLATE COL. WIDTH +2" x COL. DEPTH + 6" WITH (2) 3/4"Ø THREADED RODS DRILLED AND EPOXIED, MIN. EMBED 5".
3. 1 1/2" NON SHRINK GROUT
4. EXISITNG FOUNDATION
5. SAW CUT EXISTING SLAB, FINISH AS PER ARCHITECTURAL.
6. NEW FOOTING, SEE PLAN AND FOOTING SCHEDULE FOR SIZE AND REINFORCING. DRILL AND EPOXY FOOTING REINFORCMENT INTO EXISTING FOUNDATION, MIN EMBED 7"
7. CONCRETE SLAB ON GRADE.

D4 SE501 DETAIL
NO SCALE

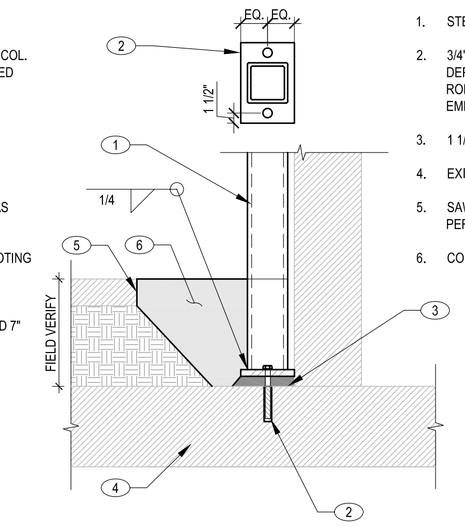

KEYNOTES:

1. STEEL COLUMN, SEE PLAN
2. 3/4" BASE PLATE COL. WIDTH +2" x COL. DEPTH + 6" WITH (2) 3/4"Ø THREADED RODS DRILLED AND EPOXIED, MIN. EMBED 5".
3. 1 1/2" NON SHRINK GROUT
4. EXISITNG FOUNDATION
5. SAW CUT EXISTING SLAB, FINISH AS PER ARCHITECTURAL.
6. CONCRETE SLAB ON GRADE

D5 SE501 DETAIL
NO SCALE

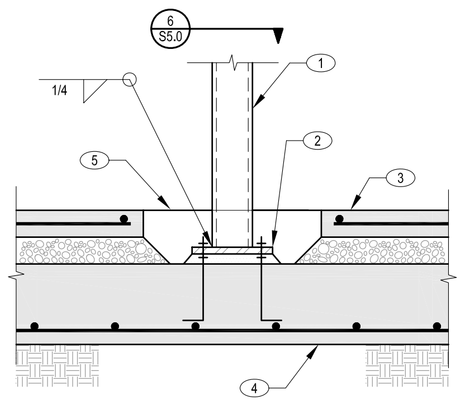

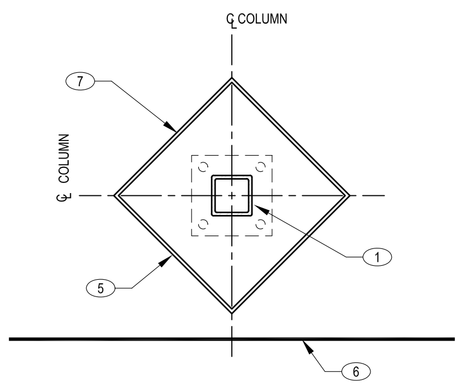

KEYNOTES:

1. STEEL COLUMN, SEE PLAN
2. 3/4" BASE PLATE COL. WIDTH + 6" x COL. DEPTH + 6" WITH (4) 3/4"Ø ANCHOR RODS ON 1-1/2" NON SHRINK GROUT WITH LEVELING NUTS. ANCHOR RODS TO BOTTOM STEEL IN FOOTINGS.
3. CONCRETE SLAB ON GRADE, SEE PLAN
4. FOOTING, SEE PLAN AND SCHEDULE FOR SIZE AND REINF.
5. 2'-4" SQUARE ISOLATION NO REINF. REQ'D. POUR AFTER DEAD LOADS ARE IN PLACE, TYP.
6. (2) #5x4'-0" WHEN NO CONTROL JOINT OCCURS @ CORNER
7. ISOLATION JOINT

C1 SE501 DETAIL
NO SCALE

KEYNOTES:

1. #4 BARS THROUGH OUT SLAB. BAR IN VALLEY TO BE PLACED LOW - AS SHOWN. TYP.
2. #4 BARS PERPENDICULAR TO DECK.

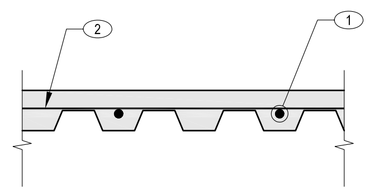

C3 SE501 DETAIL
NO SCALE

KEYNOTES:

1. ℄ OF INTERMEDIATE SUPPORT, SEE PLAN.
2. PUDDLE WELDS AT PERIMETER, SEE PLAN FOR SIZE AND SPACING.
3. ℄ OF END SUPPORT, SEE PLAN.
4. PUDDLE WELDS, SIZE & SPACING PER PLAN.
5. SIDE SEAM, ATTACHMENT PER PLAN.
6. STEEL DECK, SEE PLAN.

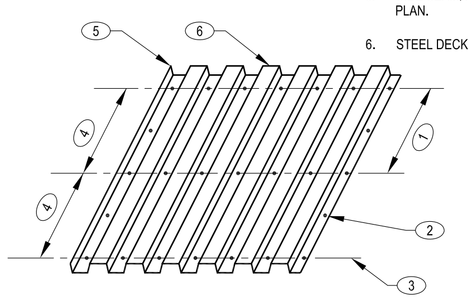

C4 SE501 DETAIL
NO SCALE

BEAM SIZE	PLATE SIZE	7/8"Ø A325 N BOLTS
W8, W10	5/16"x7"	2
W12	5/16"x10"	3
W14, W16	5/16"x13"	4
W18	3/8"x16"	5

KEYNOTES:

1. 3/8" COLUMN CAP, SEE PLAN.
2. BOLTS AS PER SCHEDULE. (3" SPACING WHERE REQ'D).
3. WF BEAM-SEE PLAN.
4. PLATE, SEE SCHED. AT LEFT.
5. STEEL COLUMN, SEE PLAN.

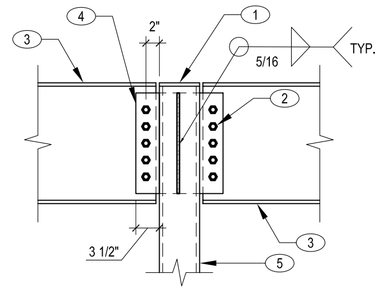

C5 SE501 BEAM TO COLUMN CONNECTION
NO SCALE

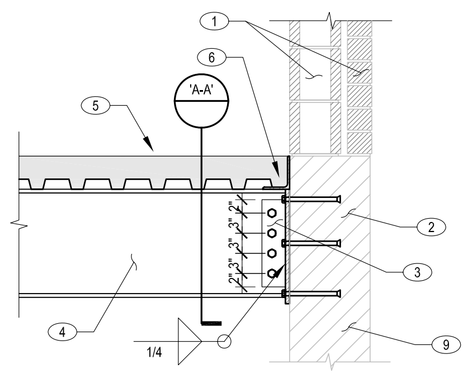

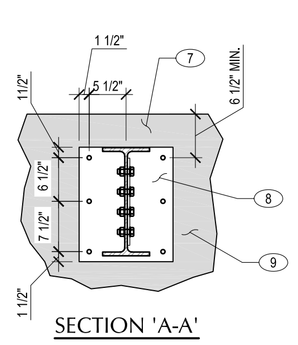

KEYNOTES:

1. EXISTING MASONRY & VENEER.
2. EXISTING CONCRETE FOUNDATION WALL, HEIGHT MAY VARY FROM SHOWN.
3. 3/8" CONNECTION PLATE W/ (4) 7/8"Ø THRU BOLTS.
4. NEW STEEL BEAM, SEE PLANS.
5. NEW CONCRETE SLAB OVER METAL DECK, SEE PLANS.
6. SEE DETAIL A3/SE501 FOR CONNECTION OF DECK TO WALL.
7. DECK NOT SHOWN FOR CLARITY.
8. 5/8" STEEL PLATE W/ (6) HILTI HDA-PR M16 ANCHORS, MIN EMBED 7-1/2".
9. EXISTING CONCRETE FOUNDATION WALL.

B1 SE501 DETAIL
NO SCALE

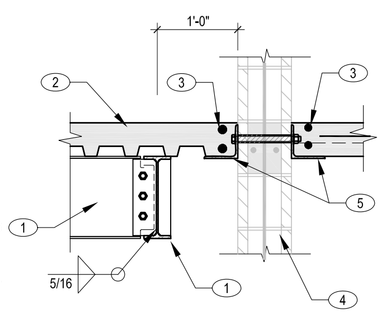

KEYNOTES:

1. STEEL BEAM, SEE PLAN FOR SIZE. SEE DETAIL A2/SE501 FOR TYP. BEAM TO BEAM CONNECTION.
2. CONC. SLAB OVER METAL DECK.
3. (2) #4 CONT. AT PERIMETER OF SLAB UNO.
4. EXISTING MASONRY WALL WITH BOND BEAM, SEE EXISTING PLANS.
5. (2) L 5x5x5/16xCONT. W/ 3/4" DIA. THROUGH BOLT @ 32" O.C. W/ HY150 ADHESIVE

NOTE:

A. OPTION: IN PLACE OF THROUGH BOLT USE 5/8" DIA. HIT HY150/HIT-ICE ADHESIVE ANCHOR @ 16" O.C. EACH SIDE, EACH ANGLE, (MIN EMBED 5") STAGGER FROM OPPOSITE SIDE.

B3 SE501 DETAIL
NO SCALE

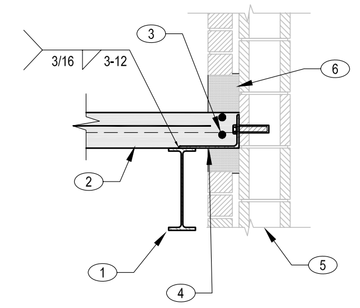

KEYNOTES:

1. STEEL BEAM, SEE PLAN FOR SIZE.
2. CONC. SLAB OVER METAL DECK DIRECTION OF DECK MAY VARY FROM SHOWN, SEE PLANS
3. (2) #4 CONT. AT PERIMETER OF SLAB UNO..
4. 5x5/16xREQ.xCONT. BENT PLATE W/ 1/2" DIA. THREADED HIT-I INSERT W/ HIT HY 20 @ 32" O.C.
5. EXISTING MASONRY WALL W/ EXISTING BRICK VENEER.
6. SOLID GROUT AFTER INSTALLATION OF SLAB (TOP & BOTTOM)

NOTE:

A. SIM COND., DECK RUNS IN OPPOSITE DIRECTION, BEAM MAY NOT BE PRESENT, WHERE NO BEAM OCCURS PROVIDE L5x5x5/16xCONT.

B4 SE501 DETAIL
NO SCALE

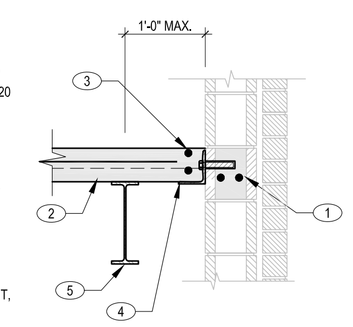

KEYNOTES:

1. EXISTING MASONRY WALL WITH BOND BEAM, SEE EXISTING PLANS.
2. CONC. SLAB OVER METAL DECK, DIRECTION OF DECK MAY VARY FROM SHOWN, SEE PLANS.
3. (2) #4 CONT. AT PERIMETER OF SLAB UNO..
4. L 5x5x5/16xCONT. W/ 5/8" DIA. HIT HY150/HIT-ICE ADHESIVE ANCHOR @ 24" O.C. (MIN EMBED 5")
5. BEAM, SEE PLANS, WHERE OCCURS

NOTE:

A. IF EXISTING MASONRY WALL DOES NOT HAVE A BOND BEAM @ CONNECTION USE 1/2" DIA. HIT HY 20 W/ THREADED HIT-I INSERTS @ 16" O.C.

B5 SE501 DETAIL
NO SCALE

KEYNOTES:

1. EXISTING COLUMN TO REMAIN.
2. (2) BOLTS PER CONNECTION.
3. L8"x4"x3/4" x 0'-6", TYP.
4. STEEL BEAM, SEE PLAN.
5. L4x4x1/4x0'-6"

NOTE:

A. WHERE BEAM FLANGE IS WIDER THAN ANGLE SEAT, WELD UNDERSIDE OF BEAM FLANGE.

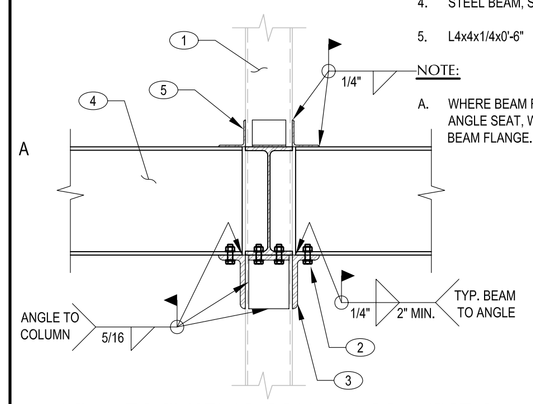

A1 SE501 BEAM TO EXISTING COLUMN CONNECTION
NO SCALE

BEAM SIZE	PLATE SIZE	7/8"Ø A325 N BOLTS
W8, W10	5/16"x7"	2
W12	5/16"x10"	3
W14, W16	5/16"x13"	4
W18	3/8"x16"	5

KEYNOTES:

1. CONCRETE SLAB.
2. CONN. PLATE SEE SCHEDULE.
3. WF BEAMS-SEE PLAN.
4. BOLTS-SEE SCHED. AT LEFT FOR NO. PER BEAM.
5. COPE BOTTOM FLANGE AS REQUIRED.

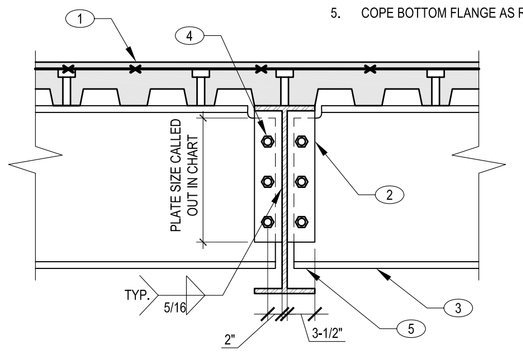

A2 SE501 BEAM TO BEAM CONNECTION @ FLOORS
NO SCALE

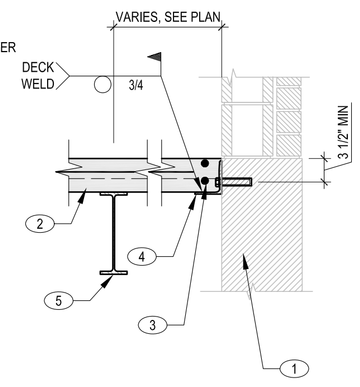

KEYNOTES:

1. EXISTING CONCRETE FOUNDATION WALL, SEE EXISTING PLANS.
2. CONC. SLAB OVER METAL DECK, DIRECTION OF DECK MAY VARY FROM SHOWN, SEE PLANS.
3. (2) #4 CONT. AT PERIMETER OF SLAB UNO..
4. L 5x5x5/16xCONT. W/ 3/4" DIA. HIT HY150/HIT-ICE ADHESIVE ANCHOR @ 32" O.C. (MIN EMBED 5")
5. BEAM, SEE PLANS, WHERE OCCURS

NOTE:

A. IF EXISTING MASONRY WALL DOES NOT HAVE A BOND BEAM @ CONNECTION USE 1/2" DIA. HIT HY 20 W/ THREADED HIT-I INSERTS @ 16" O.C.

A3 SE501 DETAIL
NO SCALE

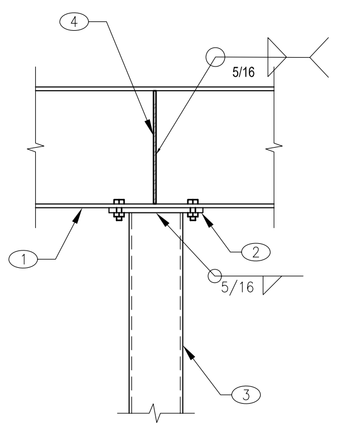

KEYNOTES:

1. BEAM CANTILEVERS TO WALL, SEE PLAN.
2. 3/4" CAP PLATE W/ (4) 3/4"Ø A325N BOLTS .

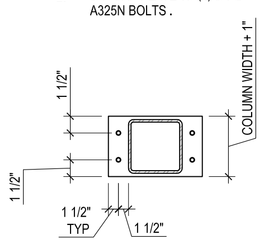

3. STEEL COLUMN, SEE PLAN
4. 3/8" WEB STIFFENER FULL HEIGHT OF WEB, SEE A2/SE501 FOR BEAM TO BEAM CONNECTION. USE STIFFENER TO PICK UP SIDE BEAMS.

A4 SE501 DETAIL
NO SCALE

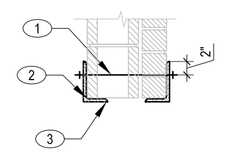

SECTION A

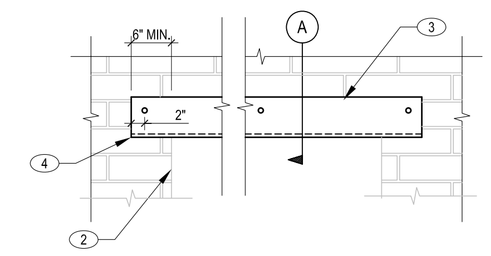

KEYNOTES:

1. 3/4"Ø THROUGH BOLTS @ 24"o.c.. (USE OF IMPACT EQUIPMENT IS NOT ALLOWED)
2. SAWCUT OPENING AS REQ'D.
3. STEEL ANGLE (LLV), SEE PLAN
4. SAWCUT FOR FULL BEARING, GROUT UNDER ANGLE, AS REQ'D.

A5 SE501 DETAIL
NO SCALE

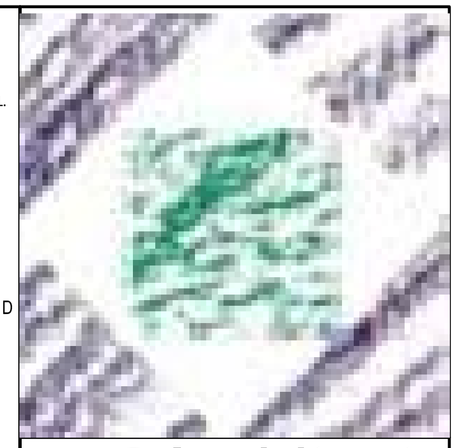

HFSArchitects
ARCHITECTURE
INTERIORS
PLANNING

1484 South State Street
Salt Lake City, Utah 84115
801-596-0691/F: 596-0693
www.hfsa.com

CONSULTANT

STRUCTURAL ENGINEERING SOLUTIONS

ENGINEERING STRUCTURAL SOLUTIONS
442 NORTH MAIN STREET
BOUNTIFUL, UTAH 84010
Phone: (801) 298-1118
Fax: (801) 298-1122

REGISTERED PROFESSIONAL ENGINEER
No.189660
CLIFF R. COLE
STATE OF UTAH

STORES & RECEIVING BUILDING EXPANSION / RENOVATION

Weber State University
Ogden, Utah

MARK	DATE	DESCRIPTION

DATE:	13 MARCH 2006
AGENCY PROJECT NO:	05276810
HFSA PROJECT NO:	0528.01
CAD DWG FILE NO:	
DRAWN BY:	NT
CHECKED BY:	CC
DESIGNED BY:	BK
DWG TYPE:	STRUCTURAL
ARCHITECTURAL PHASE:	CONSTRUCTION BID SET

SHEET TITLE

DETAILS

SE501

SHEET 4 OF 31

SYMBOL LEGEND

SYMBOL	DESCRIPTION
PLUMBING PIPING	
—CWV—	COMBINATION WASTE AND VENT
	SOIL, WASTE – ABOVE GRADE
	SOIL, WASTE – BELOW GRADE
—GW—	GREASE WASTE – ABOVE GRADE
—GW—	GREASE WASTE – BELOW GRADE
	VENT
—AV—	ACID VENT
—AW—	ACID WASTE – ABOVE GRADE
—AW—	ACID WASTE – BELOW GRADE
	COLD WATER
	HOT WATER
	HOT WATER CIRCULATE
—180—	180°F HOT WATER
—180R—	180° HOT WATER RETURN
—160—	160° HOT WATER
—160R—	160° HOT WATER RETURN
—RW—	RAINWATER – ABOVE GRADE
—RW—	RAINWATER – BELOW GRADE
—ORW—	OVERFLOW RAINWATER ABOVE GRADE
—ORW—	OVERFLOW RAINWATER BELOW GRADE
—SD—	STORM DRAIN
VTR	VENT THRU ROOF
	NON POTABLE WATER
—(E)—	EXISTING PIPE
(E)	EXISTING PIPE TO BE REMOVED
—IW—	IRRIGATION WATER
—SS—	SANITARY SEWER
—W—	WATER
—PWS—	PURE WATER SUPPLY
—PWR—	PURE WATER RETURN
—G—	GAS
—LPG—	PROPANE
—VAC—	VACUUM
—A—	COMPRESSED AIR
—MA—	MEDICAL AIR
—O—	OXYGEN
—NO—	NITROUS OXIDE
—N—	NITROGEN
—CO2—	CARBON DIOXIDE
—EVAC—	EVACUATION

SYMBOL LEGEND

SYMBOL	DESCRIPTION
HVAC PIPING	
—HPS—	HIGH PRESSURE STEAM
—MPS—	MEDIUM PRESSURE STEAM
—LPS—	LOW PRESSURE STEAM
—HPC—	HIGH PRESSURE RETURN
—MPC—	MEDIUM PRESSURE RETURN
—LPC—	LOW PRESSURE RETURN
—PC—	PUMP DISCHARGE
—HWS—	HOT WATER SUPPLY
—HWR—	HOT WATER RETURN
—TWS—	TEMPERED WATER SUPPLY
—CWS—	CHILLED WATER SUPPLY
—CWR—	CHILLED WATER RETURN
—RL—	REFRIGERANT LIQUID
—RS—	REFRIGERANT SUCTION
—C—	CONDENSER WATER SUPPLY
—CR—	CONDENSER WATER RETURN
—D—	DRAIN LINE
—HG—	HOT GAS BYPASS
—GS—	GLYCOL SUPPLY
—GR—	GLYCOL RETURN
—FOS—	FUEL OIL SUCTION
—FOR—	FUEL OIL RETURN
—FOV—	FUEL OIL VENT
—(E)—	EXISTING PIPE
(E)	EXISTING PIPE TO BE REMOVED

ABBREVIATIONS

NOTE: ALL ABBREVIATIONS MAY NOT BE USED

AD	ACCESS DOOR	MCA	MINIMUM CIRCUIT AMPS
AIR COND	AIR CONDITION(–ING,–ED)	MFR	MANUFACTURER
		MIN	MINIMUM
APD	AIR PRESSURE DROP	N/A	NOT APPLICABLE
BD	BALANCING DAMPER	NC	NORMALLY CLOSED
BHP	BRAKE HORSE POWER	NC	NOISE CRITERIA
BTU	BRITISH THERMAL UNIT	NIC	NOT IN CONTRACT
BTUH	BTU/HOUR	NO	NORMALLY OPEN
CFH	CUBIC FEET PER HOUR	NPSH	NET POSITIVE SUCTION HEAD
CFM	CUBIC FEET PER MINUTE		
CLG	COOLING	NTS	NOT TO SCALE
COMP	COMPONENT	OA	OUTSIDE AIR
COND	CONDENS(–ER, –ING, –ATION)	OD	OUTSIDE DIAMETER
		OZ	OUNCE
CV	CONTROL VALVE	PD	PRESSURE DROP OR DIFFERENCE
CW	COLD WATER		
DIA	DIAMETER	PG	PROPYLENE GLYCOL
DISCH	DISCHARGE	PH	PHASE
DP	DEPTH OR DEEP	PPM	PARTS PER MILLION
DB	DRY BULB TEMPERATURE	PRESS	PRESSURE
(E)	EXISTING	PSF	POUNDS PER SQUARE FOOT
EER	ENERGY EFFICIENCY RATIO		
EFF	EFFICIENCY	PSI	POUNDS PER SQUARE INCH
EG	ETHYLENE GLYCOL		
ELEC	ELECTRIC	PSIA	PSI ABSOLUTE
ELEV	ELEVATION	PSIG	PSI GAUGE
ENT	ENTERING	R	THERMAL RESISTANCE
EVAP	EVAPORAT(–E, –ING, –ED, –OR)	RA	RETURN AIR
		RECIRC	RECIRCULATE
EWT	ENTERING WATER TEMPERATURE	REFR	REFRIGERATION
		REQD	REQUIRED
EXT	EXTERNAL	RLA	RATED ––– AMPS
(F)	FUTURE	RPM	REVOLUTIONS PER MINUTE
F	FAHRENHEIT	RW	RAINWATER
FC	FLEXIBLE CONNECT(–OR, –ION)	SA	SUPPLY AIR
		SC	SHADING COEFFICIENT
FD	FIRE DAMPER	SCFM	STANDARD CUBIC FEET PER MINUTE
FLA	FULL LOAD AMPS		
FPI	FINS PER INCH	SCW	SOFT COLD WATER
FPM	FEET PER MINUTE	SF	SAFETY FACTOR
FPS	FEET PER SECOND	SH	SENSIBLE HEAT
FSD	FIRE SMOKE DAMPER	SL	SEA LEVEL
FT	FEET	SP	STATIC PRESSURE
GAL	GALLON(S)	SPECS(S)	SPECIFICATION(S)
GPH	GALLONS PER HOUR	SQ	SQUARE
GPM	GALLONS PER MINUTE	STD	STANDARD
HD	HEAD	STM	STEAM
HG	MERCURY	TEMP	TEMPERATURE
HR	HOUR	TD	TEMP. DROP OR DIFF.
HT	HEIGHT	THERM	THERMAL
HTG	HEATING	TOT	TOTAL
HP	HORSE POWER	TSTAT	THERMOSTAT
HW	HOT WATER	V	VOLT
HZ	HERTZ(FREQUENCY)	VAC	VACUUM
ID	INSIDE DIAMETER	VAV	VARIABLE AIR VOLUME
IN	INCH	VEL	VELOCITY
KW	KILOWATT	VENT	VENT, VENTILATION
LAT	LEAVING AIR TEMPERATURE	VERT	VERTICAL
		VFD	VARIABLE FREQUENCY DRIVE
LBS	POUNDS		
LG	LENGTH	VOL	VOLUME
LH	LATENT HEAT	WC	WATER COLUMN
LRA	LOCKED ROTOR AMPS	WG	WATER GAUGE
LVG	LEAVING	WPD	WATER PRESSURE DROP
LWT	LEAVING WATER TEMPERATURE	WTR	WATER
		WT	WEIGHT
MAX	MAXIMUM	WB	WET BULB TEMP
MBH	THOUSAND BTU PER HOUR	YR	YEAR

SYMBOL LEGEND

SYMBOL	DESCRIPTION
VALVES, METERS, AND GAUGES	
	SHUT OFF VALVE
	GATE VALVE
	CHECK VALVE
	AUTO 2–WAY VALVE
	AUTO 3–WAY VALVE
	GLOBE VALVE
	BALL VALVE
	RELIEF VALVE
	CHAIN OPERATED GATE VALVE
	PRESSURE REDUCING VALVE
	BUTTERFLY VALVE
	SOLENOID VALVE
	ANGLE VALVE
	VENTURI
	BALANCING OR PLUG COCK
	FLOW SETTER
	EXPANSION VALVE (REFRIG.)
	GAS COCK
MAV	MANUAL AIR VENT
	STRAINER
	GAUGE COCK
	FLEXIBLE CONNECTION
	PRESSURE GAUGE
	THERMOMETER
	VICTUALIC COUPLING
	REDUCER CONCENTRIC
	REDUCER ECCENTRIC
	REFRIGERANT SITE GLASS
	REFRIGERANT STAINER
	REFRIGERANT FILTER DRIER
	90° ELBOW UP
	90° ELBOW DOWN
	90° TEE UP
	90° TEE DOWN
	UNION
	CAPPED PIPE
	ANCHOR
	FLOAT AND THERMOSTATIC TRAP
HVAC SYMBOLS	
T	THERMOSTAT
S	TEMPERATURE SENSOR
H	HUMIDISTAT
PLUMBING SYMBOLS	
C.B.	CATCH BASIN
M.H.	MANHOLE
W.H.	WALL HYDRANT
H.B.	HOSE BIBB
	CLEANOUT TO GRADE
	FLOOR CLEANOUT
	WALL CLEANOUT
	1/2 GRATE
	3/4 GRATE
	FULL GRATE

SYMBOL LEGEND

SYMBOL	DESCRIPTION
DUCTWORK	
SINGLE LINE / DOUBLE LINE	RECTANGULAR SUPPLY DUCT UP
	RECTANGULAR SUPPLY DUCT DOWN
	RECTANGULAR RETURN DUCT UP
	RECTANGULAR RETURN DUCT DOWN
	RECTANGULAR EXHAUST DUCT UP
	RECTANGULAR EXHAUST DUCT DOWN
	ROUND DUCT UP
	ROUND DUCT DOWN
	ACCOUSTICALLY LINED RECTANGULAR DUCT
	90° RECTANGULAR ELBOW WITH TURNING VANES
	90° RADIUS ELBOW R=1.5
	DUCT SIZE OR SHAPE TRANSITION
	OPPOSED BLADE BALANDING DAMPER (O.B.D.) IN RECT DUCT
	BUTTERFLY BALANCING DAMPER IN ROUND DUCTS
	COMBINATION TEE
	SPLITTER DAMPER
	SQUARE OR RECTANGULAR CEILING DIFFUSER
	ROUND CEILING DIFFUSER
	SIDEWALL REGISTER SUPPLY OR RETURN
	ROUND FLEXIBLE DUCT
	RETURN GRILLE
	EXHAUST GRILLE
FSD / FSD	FIRE/SMOKE DAMPER
	FIRE DAMPER
SD / SD	SMOKE DAMPER
FC / FC	FLEXIBLE CONNECTION
	EXISTING DUCT
	DUCT TO BE REMOVED

GENERAL MECHANICAL NOTES

1. ALL CEILING DIFFUSERS SHOWN AS SUCH ARE CD–1, CFM AS NOTED, UNLESS OTHERWISE NOTED.
2. ALL CEILING RETURN GRILLES SHOWN AS SUCH ARE RG–1 UNLESS OTHERWISE NOTED.
3. DO NOT ROUTE DUCTS AND PIPES ABOVE ELECTRICAL PANELS. ALL ELECTRICAL PANELS MUST HAVE CLEAR ACCESS SPACE IN FRONT OF PANEL 4'–0" DEEP AND 6'–6" HIGH. DO NOT ROUTE DUCTS AND PIPES IN ELECTRICAL ROOMS, EXCEPT DUCTS AND PIPES SERVING THE ROOM.
4. COORDINATE EXACT LOCATIONS OF CEILING DIFFUSERS AND GRILLES WITH ARCHITECTURAL REFLECTED CEILING PLAN.
5. ALL DUCT DIMENSIONS ARE INSIDE FREE AREA DIMENSIONS. ADJUST SHEET METAL DIMENSION FOR LINED DUCT.
6. IF CONTRACTOR ENCOUNTERS MATERIAL WHICH MAY CONTAIN ASBESTOS IMMEDIATELY STOP WORK IN THIS AREA AND NOTIFY THE OWNER.

MECHANICAL SHEET INDEX

SHEET NO	SHEET TITLE
ME001	MECHANICAL SYMBOLS LEGEND SHEET INDEX
ME501	MECHANICAL SCHEDULES AND DETAILS
MD101	FIRST FLOOR MECHANICAL DEMOLITION FLOOR PLAN
MD102	SECOND FLOOR MECHANICAL DEMOLITION FLOOR PLAN
MH101	FIRST FLOOR MECHANICAL PLAN
MH102	SECOND FLOOR MECHANICAL PLAN

SYMBOL LEGEND

SYMBOL	DESCRIPTION
REFERENCE AND LINE SYMBOLS	
# / SHEET	DETAIL INDICATOR: # INDICATES DETAIL NUMBER, SHEET INDICATES DRAWING SHEET WHERE DETAIL IS SHOWN.
# / SHEET	ELEVATION OR SECTION INDICATOR, EXTERIOR: # INDICATES ELEVATION OR SECTION NUMBER, SHEET INDICATES DRAWING SHEET WHERE ELEVATION OR SECTION IS SHOWN.
# / SHEET	ELEVATION OR SECTION INDICATOR, INTERIOR: # INDICATES ELEVATION OR SECTION NUMBER, SHEET INDICATES DRAWING SHEET WHERE ELEVATION OR SECTION IS SHOWN.
100	ROOM OR SPACE NUMBER.
1	KEYNOTE INDICATOR.
	REVISION INDICATOR.
CU–1	EQUIPMENT INDICATOR.
P–	PLUMBING FIXTURE INDICATOR.
TYPE / CFM / SIZE	DIFFUSER/GRILLE INDICATOR.
TYPE / SIZE	DIFFUSER/GRILLE INDICATOR.
	BREAK, STRAIGHT
	BREAK, ROUND.
MATCH LINE / SEE XX/X–XXX	MATCH LINE INDICATOR
--------	HIDDEN FEATURES LINE: HIDDEN, THIN LINE.
	CONTRACT LIMIT LINE: DASHDOT, WIDE LINE.
	NEW CONNECTION POINT TO EXISTING

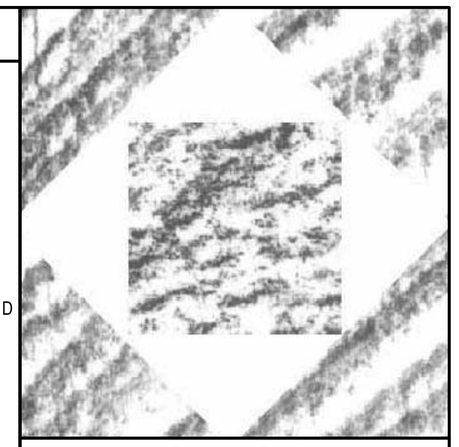

HFSArchitects

ARCHITECTURE
INTERIORS
PLANNING

1484 South State Street
Salt Lake City, Utah 84115
801-596-0691/F: 596-0693
www.hfsa.com

CONSULTANT

SPECTRUM ENGINEERS
175 South Main Street, Suite 300
Salt Lake City, Utah 84111
801-328-5151
800-678-7077
FAX 801-328-5155
www.spectrum-engineers.com

Registered Professional Engineer
NEIL H. SPENCER
No. 5484
State of Utah

STORES & RECEIVING BUILDING EXPANSION / RENOVATION

Weber State University
Ogden, Utah

MARK	DATE	DESCRIPTION

DATE:	13 MARCH 2006
AGENCY PROJECT NO:	05276810
HFSA PROJECT NO:	0528.01
CAD DWG FILE NO:	
DRAWN BY:	TNB
CHECKED BY:	KDE
DESIGNED BY:	KDE
DWG TYPE:	MECHANICAL
ARCHITECTURAL PHASE:	CONSTRUCTION BID SET

SHEET TITLE

MECHANICAL SYMBOLS LEGEND SHEET INDEX

ME001

SHEET 16 OF 31

File name: P:\2006\20060013\1Drawings\Sheet\13ME001.dwg Last Plotted: 03/13/2006 @ 13:33 By: TNB

ROOFTOP PACKAGE AIR CONDITIONING UNIT SCHEDULE (GAS)

SYMBOL	MANUFACTURER	MODEL NO.	CFM	EXT S.P. (1)	SUPPLY FAN H.P.	NATURAL GAS HEATING MBH INPUT	NATURAL GAS HEATING MBH OUTPUT	COOLING MBH (2) SENSIBLE	COOLING MBH (2) TOTAL	MIN. OUTSIDE AIR SETTING	VOLTS/ PHASE/ CYCLE	MIN CIRCUIT AMP.	COMMENTS
RTU–1	CARRIER	48PGEC07	2250	1.25	2	92	74	62.1	63.4	120	208/3/60	36	(1) (2)
RTU–2	CARRIER	48PGDC08	3200	1.25	2	110	90	79	79	240	208/3/60	46.3	(1) (2)

(1) CAPACITIES AT 4500 FT. ELEVATION
(2) CAPACITY BASED ON 80 deg F db/62 degF wb EAT, 105 degF AMB

EXHAUST FAN SCHEDULE

SYMBOL	MANUFACTURER	MODEL NO.	CFM	STATIC PRESSURE IN WG.	H.P.	RPM	VOLTS/ PHASE/ CYCLE	AREA SERVED	COMMENTS
EF–1	LOREN–COOK	GC–140	100	0.25	70 W	1500	115/1/60	MENS TR	(1) (2) (3)
EF–2	LOREN–COOK	GC–140	100	0.25	70 W	1500	115/1/60	WOMENS TR	(1) (2) (3)

(1) ALL CAPACITIES AT 4500 FT. ELEVATION
(2) CEILING EXHAUST FAN. PROVIDE GRAVITY BACKDRAFT DAMPER, INTEGRAL THERMAL OVERLOAD PROTECTION AND DISCONNECT.
(3) CONTROL: INTERLOCK WITH LIGHTS BY DIV. 16.

REGISTER AND GRILLE SCHEDULE

DESIGNATION	DESCRIPTION	SIZE	MAX. CFM	MAX. N.C.
CD–1	PERFORATED FACE CEILING DIFFUSERS REMOVABLE FACE & CORE. INDIVIDUALLY ADJUSTABLE CURVED BLADES. W/O.B.D. FRAME SHALL BE FOR SURFACE OR LAY–IN MOUNTING AS REQUIRED BY CEILING TYPE. LAY–IN FRAMES SHALL BE 24" x 24", 24" x 12", OR 12" x 12" AS REQUIRED TO FIT CEILING TILE SPACE AVAILABLE. DIFFUSER SHALL BE PRICE MODEL PDC. PROVIDE ROUND NECK ADAPTER.	6 x 6 8 x 8 9 x 9 10 x 10 6 x 18 12 x 12 15 x 15 18 x 18	125 220 250 320 350 425 625 900	30
RG–1	PERFORATED FACE RETURN AIR UNIT, REMOVABLE FACE & CORE. FRAME SHALL BE FOR SURFACE OR LAY–IN MOUNTING AS REQUIRED BY CEILING TYPE. LAY–IN FRAMES SHALL BE 24" x 24", 24" x 12", OR 12" x 12" AS REQUIRED TO FIT CEILING TILE SPACE AVAILABLE. RETURN AIR UNITS SHALL BE PRICE MODEL PDDR. AIR QUANTITY SHALL MATCH ROOM SUPPLY OR EXHAUST AIR QUANTITY.	10 x 10 12 x 12 14 x 14 10 x 22 16 x 16 18 x 18 20 x 20 22 x 22	350 500 550 625 725 900 1000 1320	30
SWS–1	DOUBLE DEFLECTION HIGH SIDEWALL SUPPLY REGISTER. VERTICAL FRONT WITH HORIZONTAL REAR DEFLECTION VANES SPACED AT ¾" O.C. ADJUSTABLE. COMPLETE WITH O.B.D. UNITS SHALL BE EH PRICE MODEL 520S WITH REMOVABLE CORE.	SEE PLAN		

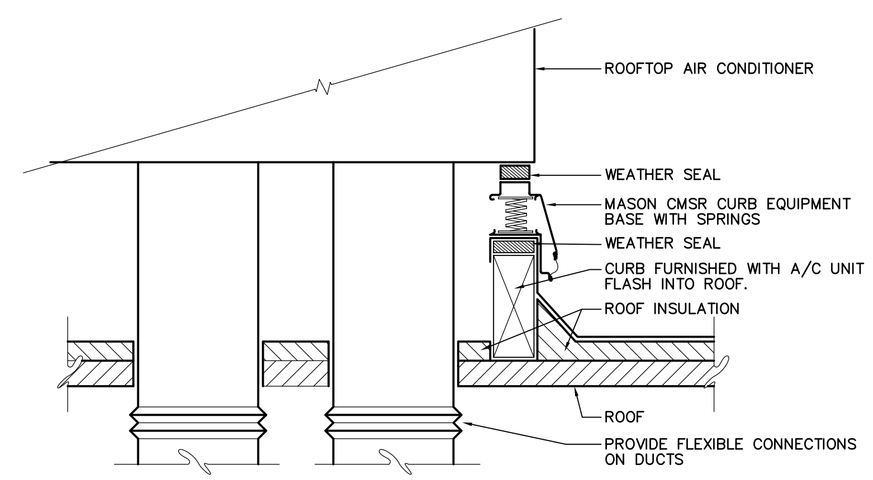

B4 ROOFTOP UNIT ON SPRING BASE DETAIL
SCALE: NOT TO SCALE

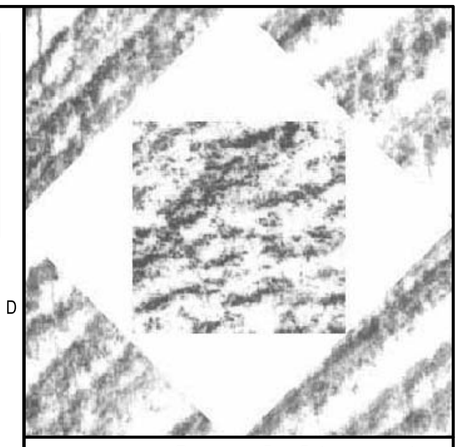

HFSArchitects
ARCHITECTURE
INTERIORS
PLANNING

1484 South State Street
Salt Lake City, Utah 84115
801-596-0691/F: 596-0693
www.hfsa.com

CONSULTANT

SPECTRUM ENGINEERS
175 South Main Street, Suite 300
Salt Lake City, Utah 84111
801-328-5151
800-678-7077
FAX 801-328-5155
www.spectrum-engineers.com

Registered Professional Engineer
NEIL H. SPENCER
No. 5484
State of Utah

STORES & RECEIVING BUILDING EXPANSION / RENOVATION

Weber State University
Ogden, Utah

MARK	DATE	DESCRIPTION

DATE:	13 MARCH 2006
AGENCY PROJECT NO:	05276810
HFSA PROJECT NO:	0528.01
CAD DWG FILE NO:	
DRAWN BY:	TNB
CHECKED BY:	KDE
DESIGNED BY:	KDE
DWG TYPE:	MECHANICAL
ARCHITECTURAL PHASE:	CONSTRUCTION BID SET

SHEET TITLE

MECHANICAL DETAILS & SCHEDULES

ME501

SHEET 17 OF 31

File name: P:\2006\20060013\1Drawings\Sheet\13ME501.dwg Last Plotted: 03/13/2006 @ 13:33 By: TNB

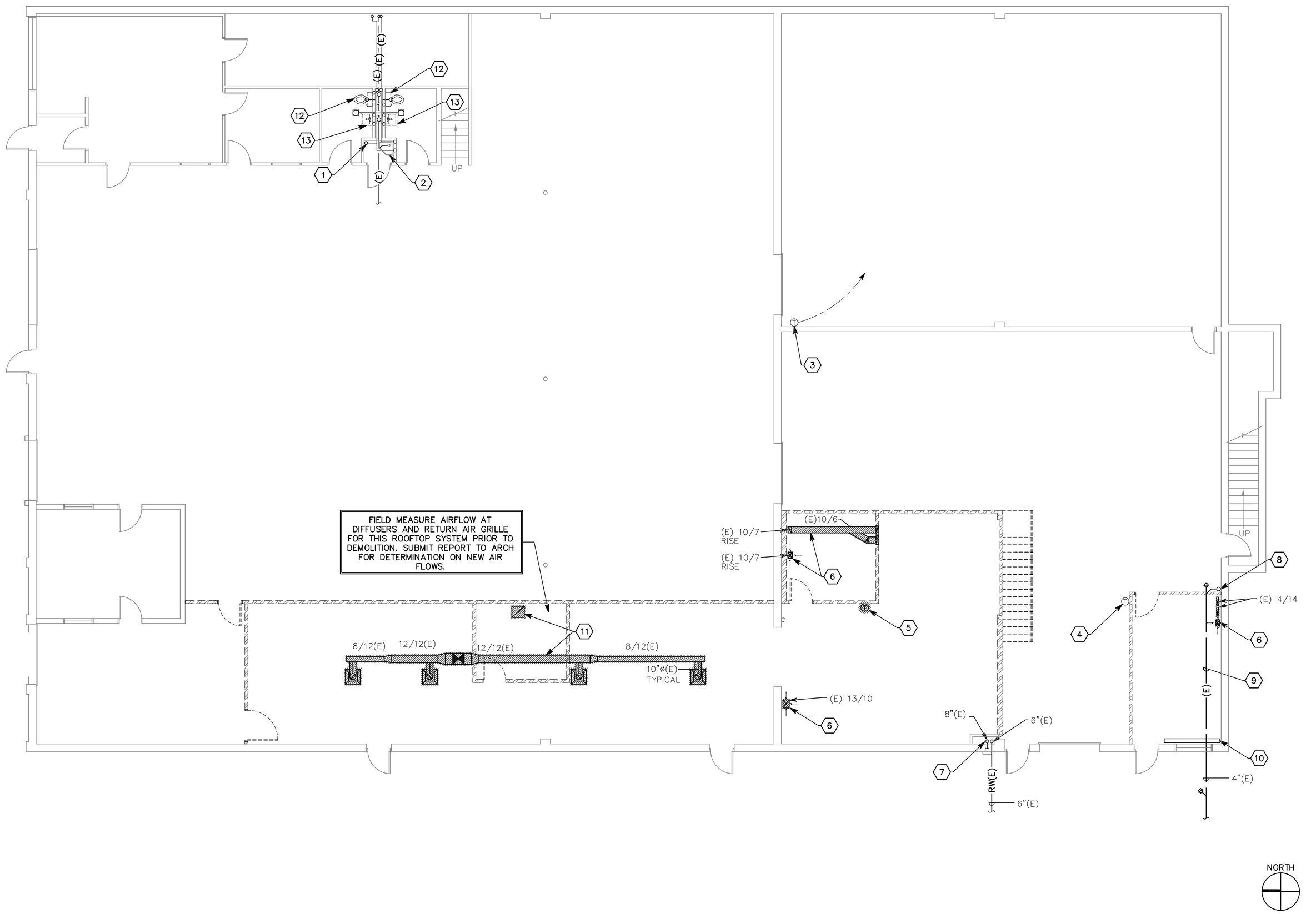

A1 FIRST FLOOR MECHANICAL DEMOLITION PLAN

SCALE: 1/8"=1'-0"

SHEET KEYNOTES

1. EXISTING 1½" BUILDING WATER SUPPLY.
2. EXISTING PLUMBING FIXTURES TO REMAIN.
3. EXISTING UNIT HEATER THERMOSTAT TO REMAIN.
4. RELOCATE EXISTING UNIT HEATER THERMOSTAT.
5. REMOVE EXISTING ROOFTOP UNIT THERMOSTAT.
6. REMOVE EXISTING DUCTWORK, DIFFUSERS, AND GRILLES.
7. EXISTING PRIMARY AND SECONDARY ROOF DRAIN PIPING TO REMAIN.
8. EXISTING 4" WASTE LINE CAPPED AT FLOOR LEVEL TO REMAIN.
9. EXISTING 4" WASTE TO REMAIN.
10. EXISTING ELECTRIC BASEBOARD HEATER TO REMAIN.
11. REMOVE EXISTING DUCTWORK, GRILLES AND DIFFUSERS.
12. REMOVE EXISTING WATER CLOSET TO BE REPLACED WITH NEW ADA WATER CLOSET. SEE SHEET PL101.
13. REMOVE EXISTING LAVATORY AND RELATED WATER, WASTE, AND VENT PIPING. SEE SHEET PL101 FOR NEW LAVATORY LAYOUT.

HFSArchitects
ARCHITECTURE
INTERIORS
PLANNING
1484 South State Street
Salt Lake City, Utah 84115
801-596-0691/F: 596-0693
www.hfsa.com

CONSULTANT

SPECTRUM ENGINEERS
175 South Main Street, Suite 300
Salt Lake City, Utah 84111
801-328-5151
800-678-7077
FAX 801-328-5155
www.spectrum-engineers.com

Registered Professional Engineer
NEIL H. SPENCER
No. 5484
State of Utah

STORES & RECEIVING BUILDING EXPANSION / RENOVATION

Weber State University
Ogden, Utah

MARK	DATE	DESCRIPTION

DATE:	13 MARCH 2006
AGENCY PROJECT NO:	05276810
HFSA PROJECT NO:	0528.01
CAD DWG FILE NO:	
DRAWN BY:	TNB
CHECKED BY:	KDE
DESIGNED BY:	KDE
DWG TYPE:	MECHANICAL
ARCHITECTURAL PHASE:	CONSTRUCTION BID SET

SHEET TITLE

MECHANICAL DEMO FLOOR PLANS

MD101

SHEET 18 OF 31

File name: P:\2006\20060013\1Drawings\Sheet\13MD101.dwg Last Plotted: 03/13/2006 @ 13:34 By: TNB

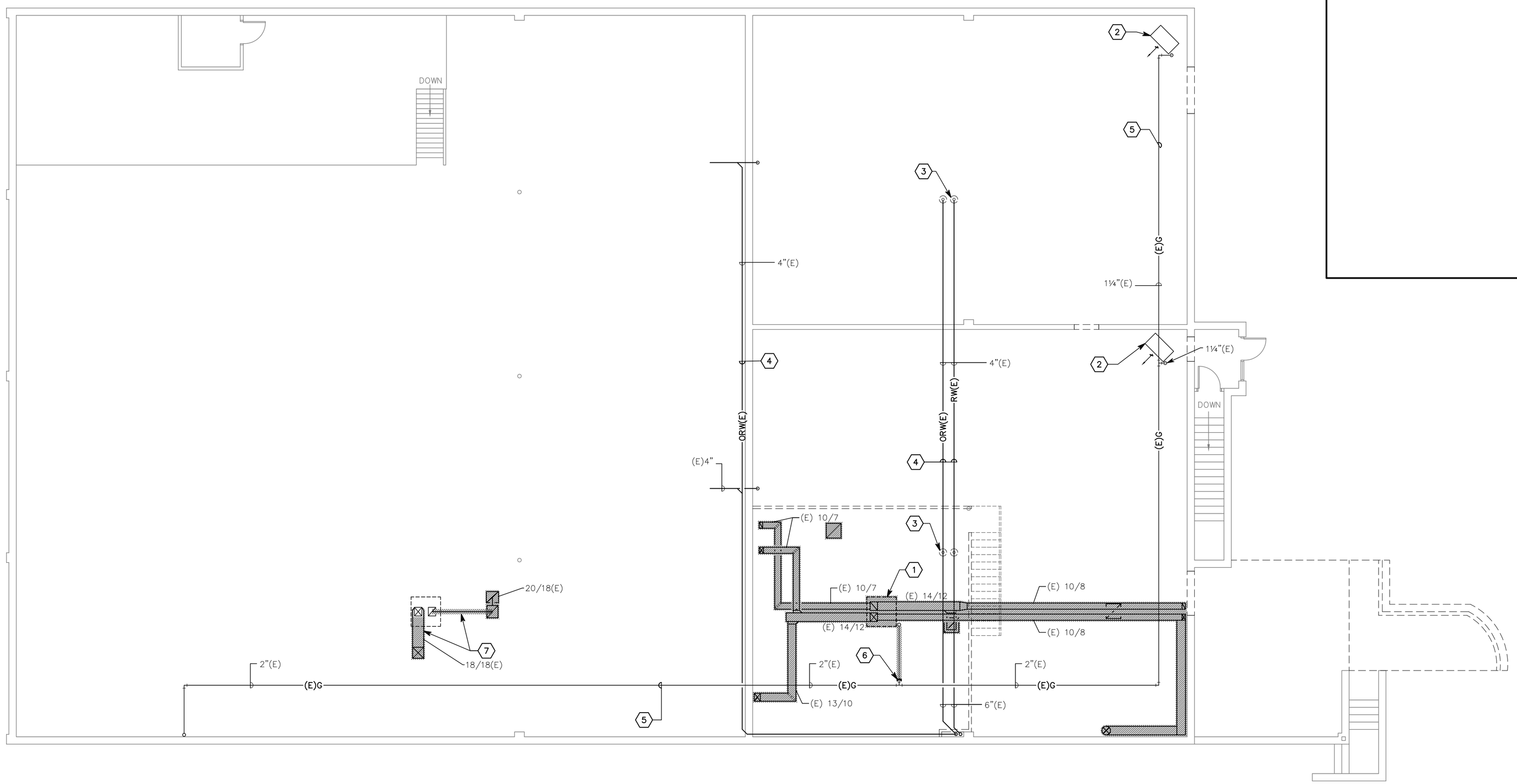

A1 SECOND FLOOR MECHANICAL DEMOLITION PLAN

SCALE: 1/8"=1'-0"

NORTH

0 4' 8' 16'

SHEET KEYNOTES

1. REMOVE EXISTING ROOFTOP AC UNIT AND ALL RELATED DUCTWORK, DIFFUSERS, GRILLES, AND GAS PIPING.
2. RELOCATE EXISTING GAS FIRED UNIT HEATER. SEE SHEET MH101.
3. EXISTING PRIMARY AND SECONDARY ROOF DRAINS TO REMAIN.
4. EXISTING PRIMARY AND SECONDARY ROOF DRAIN PIPING TO REMAIN.
5. EXISTING 4 OZ GAS LINE TO REMAIN.
6. CAP EXISTING 1" GAS LINE AND REMOVE BEYOND.
7. REMOVE EXISTING DUCTWORK BACK TO ROOF DECK SEE SHEET MH102 FOR NEW DUCT WORK.

HFSArchitects

ARCHITECTURE
INTERIORS
PLANNING

1484 South State Street
Salt Lake City, Utah 84115
801-596-0691/F: 596-0693
www.hfsa.com

CONSULTANT

SPECTRUM ENGINEERS
175 South Main Street, Suite 300
Salt Lake City, Utah 84111
801-328-5151
800-678-7077
FAX 801-328-5155
www.spectrum-engineers.com

Registered Professional Engineer
NEIL H. SPENCER
No. 5484
State of Utah

STORES & RECEIVING BUILDING EXPANSION / RENOVATION

Weber State University
Ogden, Utah

MARK	DATE	DESCRIPTION

DATE:	13 MARCH 2006
AGENCY PROJECT NO:	05276810
HFSA PROJECT NO:	0528.01
CAD DWG FILE NO:	
DRAWN BY:	TNB
CHECKED BY:	KDE
DESIGNED BY:	KDE
DWG TYPE:	MECHANICAL
ARCHITECTURAL PHASE:	CONSTRUCTION BID SET

SHEET TITLE

MECHANICAL DEMO FLOOR PLANS

MD102

SHEET 19 OF 31

File name: P:\2006\20060013\1Drawings\Sheet\13MD102.dwg Last Plotted: 03/13/2006 @ 13:33 By: TNB

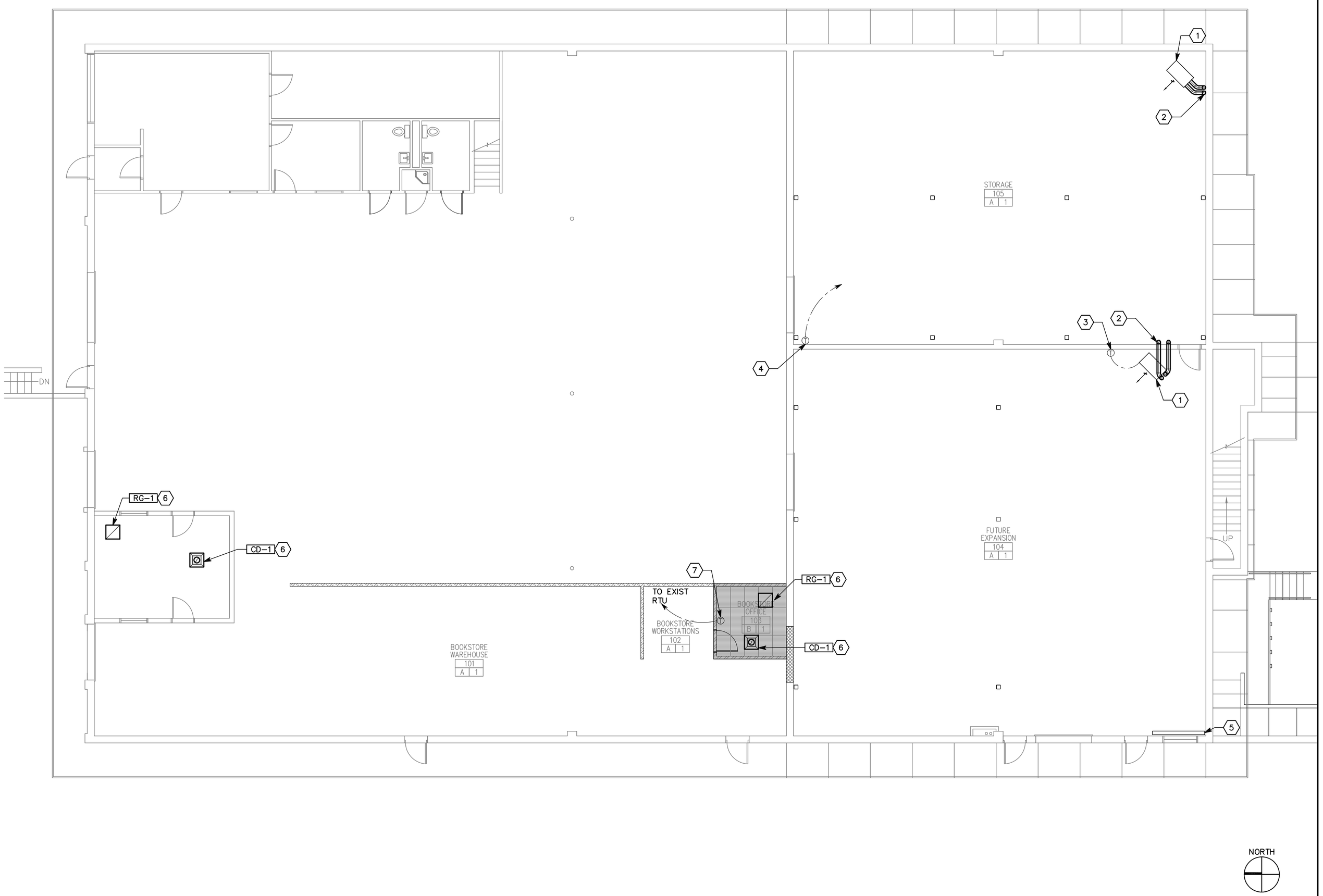

A1 FIRST FLOOR MECHANICAL PLAN

SCALE: 1/8"=1'-0"

0 4' 8' 16'

SHEET KEYNOTES

1. RE-INSTALL EXISTING UNIT HEATER.
2. NEW 6"ø FLUE AND INTAKE DUCTWORK UP. SEE SHEET MH102.
3. RE-INSTALL EXISTING THERMOSTAT.
4. EXISTING THERMOSTAT. RE-CONNECT TO EXISTING UNIT HEATER.
5. EXISTING ELECTRIC BASBOARD HEATER TO REMAIN.
6. DUCTWORK FROM ABOVE SEE SHEET MH102.
7. NEW THERMOSTAT TO BE JOHNSON CONTROLS. TEC 2000 PROGRAMMABLE THERMOSTAT TO COMMUNIATE WITH FUTURE METASYS BLDG SYSTEM.PROVIDE (2) ½" CONDUITS UP TO ABOVE TOP OF WALL FOR FUTURE WIRING.

HFSArchitects
ARCHITECTURE
INTERIORS
PLANNING

1484 South State Street
Salt Lake City, Utah 84115
801-596-0691/F: 596-0693
www.hfsa.com

CONSULTANT

SPECTRUM ENGINEERS
175 South Main Street, Suite 300
Salt Lake City, Utah 84111
801-328-5151
800-678-7077
FAX 801-328-5155
www.spectrum-engineers.com

Registered Professional Engineer
NEIL H. SPENCER
No. 5484
State of Utah

STORES & RECEIVING BUILDING EXPANSION / RENOVATION

Weber State University
Ogden, Utah

MARK	DATE	DESCRIPTION

DATE:	13 MARCH 2006
AGENCY PROJECT NO:	05276810
HFSA PROJECT NO:	0528.01
CAD DWG FILE NO:	
DRAWN BY:	TNB
CHECKED BY:	KDE
DESIGNED BY:	KDE
DWG TYPE:	MECHANICAL
ARCHITECTURAL PHASE:	CONSTRUCTION BID SET

SHEET TITLE

MECHANICAL FLOOR PLANS

MH101

SHEET 20 OF 31

File name: P:\2006\20060013\1Drawings\Sheet\13MH101.dwg Last Plotted: 03/13/2006 @ 13:32 By: TNB

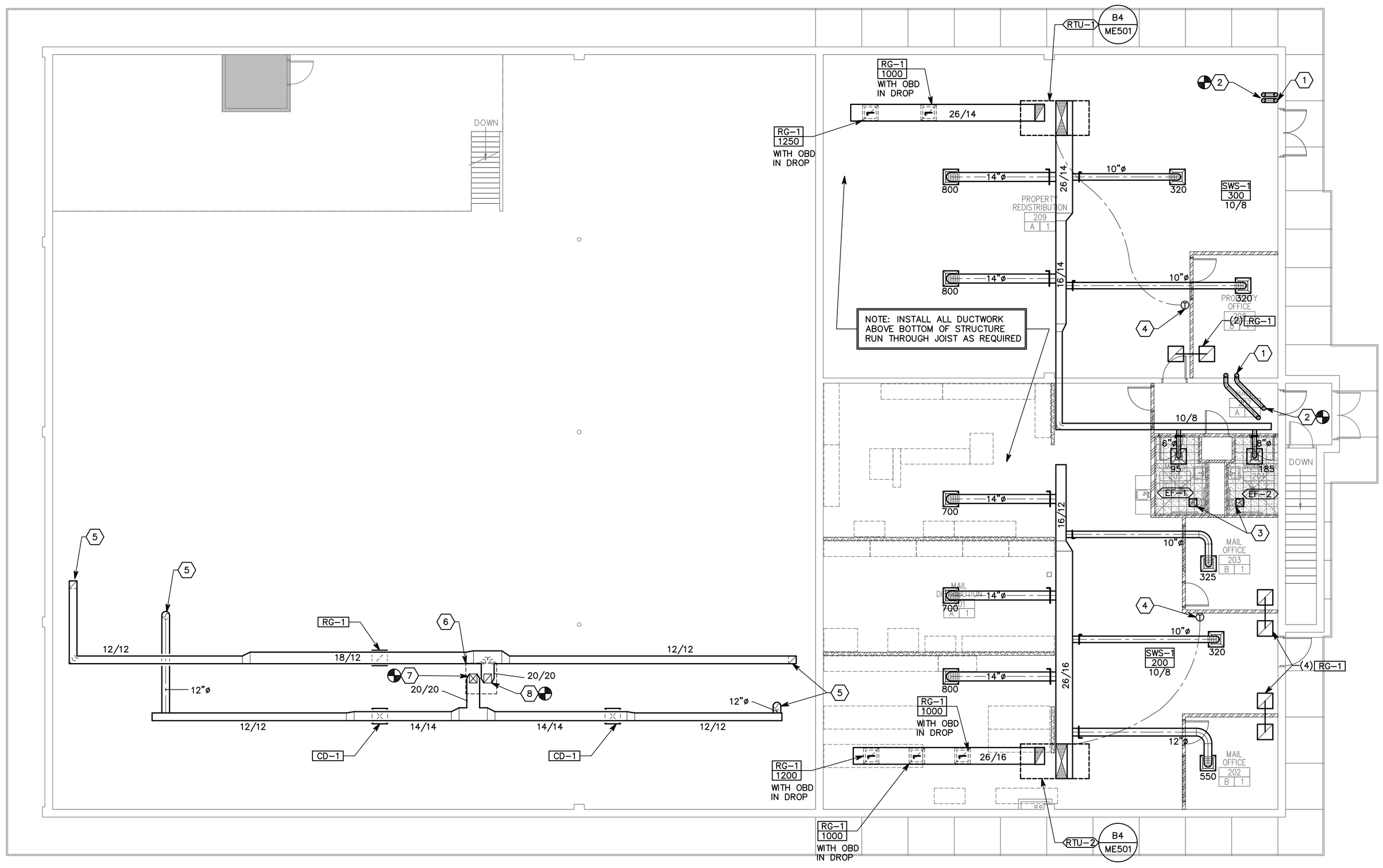

A1 SECOND FLOOR MECHANICAL PLAN

SCALE: 1/8"=1'-0"

SHEET KEYNOTES

1. 6"ø FLUE AND COMBUSTION AIR DUCT DOWN. SEE SHEET MH101.
2. CONNECT TO 6"ø FLUE AND COMBUSTION AIR DUCT TO EXISTING BELOW ROOF. FIELD VERIFY EXACT LOCATION.
3. FULL SIZE DISCHARGE UP THROUGH ROOF PROVIDE ROOF CAP.
4. NEW THERMOSTAT TO BE JOHNSON CONTROLS. TEC 2000 PROGRAMMABLE THERMOSTAT TO COMMUNIATE WITH FUTURE METASYS BLDG SYSTEM.PROVIDE (2) ½" CONDUITS UP TO ABOVE TOP OF WALL FOR FUTURE WIRING.
5. DOWN TO OFFICE BELOW SEE SHEET MH101.
6. EXISTING ROOFTOP AC UNIT. UNIT TO BE REBALANCED. AIRFLOWS TO BE PROVIDED AFTER MEASURMENTS OF EXISTING AIR FLOWS.
7. RECONNECT TO SUPPLY AIR DUCT AT ROOFDECK.
8. RECONNECT TO RETURN AIR DUCT AT ROOF DECK.

HFSArchitects
ARCHITECTURE
INTERIORS
PLANNING

1484 South State Street
Salt Lake City, Utah 84115
801-596-0691/F: 596-0693
www.hfsa.com

CONSULTANT

SPECTRUM ENGINEERS
175 South Main Street, Suite 300
Salt Lake City, Utah 84111
801-328-5151
800-678-7077
FAX 801-328-5155
www.spectrum-engineers.com

Registered Professional Engineer
NEIL H. SPENCER
No. 5484
State of Utah

STORES & RECEIVING BUILDING EXPANSION / RENOVATION

Weber State University
Ogden, Utah

MARK	DATE	DESCRIPTION

DATE:	13 MARCH 2006
AGENCY PROJECT NO:	05276810
HFSA PROJECT NO:	0528.01
CAD DWG FILE NO:	
DRAWN BY:	TNB
CHECKED BY:	KDE
DESIGNED BY:	KDE
DWG TYPE:	MECHANICAL
ARCHITECTURAL PHASE:	CONSTRUCTION BID SET

SHEET TITLE

MECHANICAL FLOOR PLANS

MH102

SHEET 21 OF 31

File name: P:\2006\20060013\1Drawings\Sheet\13MH102.dwg Last Plotted: 03/13/2006 @ 13:32 By: TNB

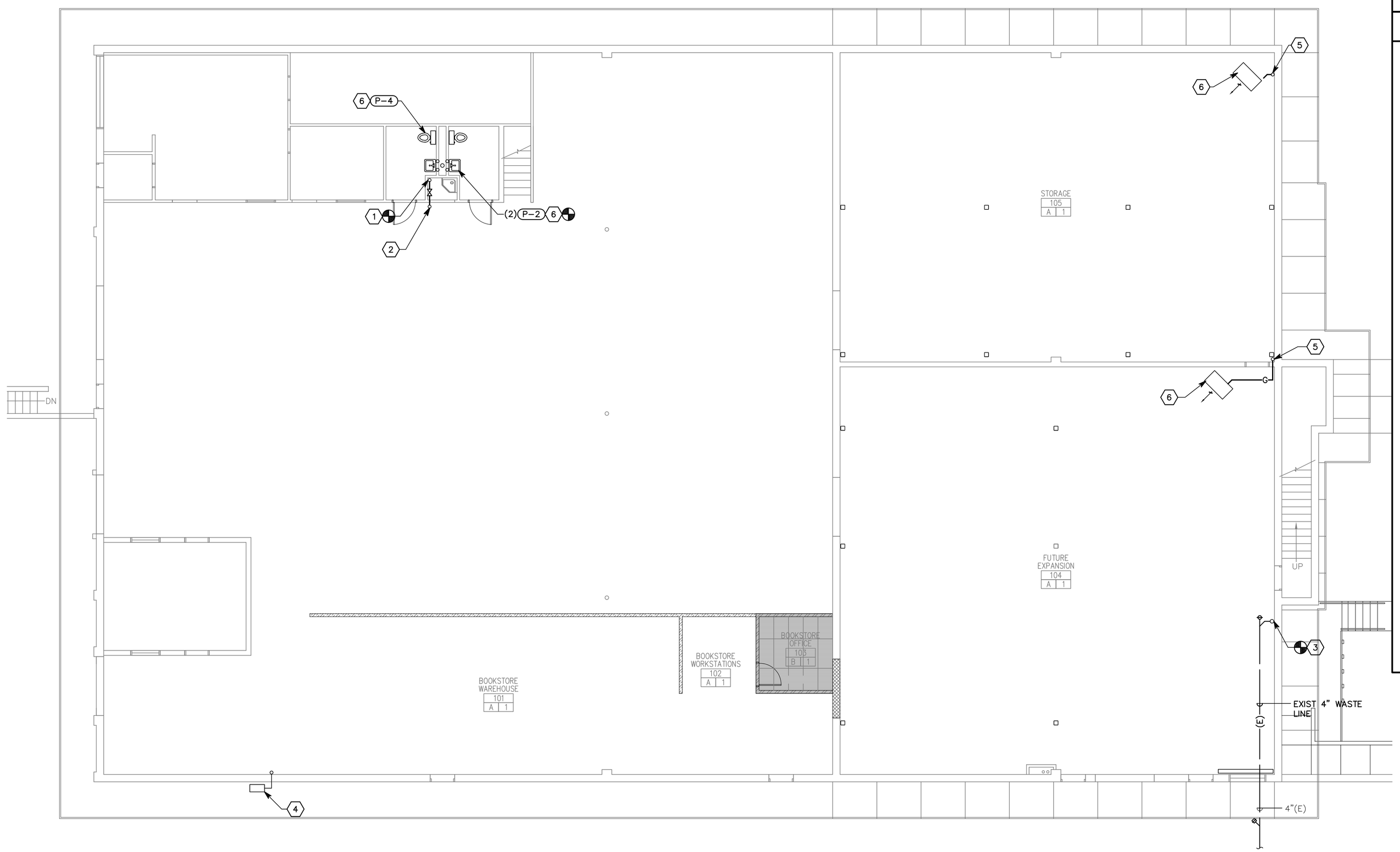

A1 FIRST FLOOR PLUMBING PLAN

SCALE: 1/8"=1'-0"

NORTH

0 4' 8' 16'

GENERAL PLUMBING NOTES

1. REFER TO MECHANICAL SHEET ME001 FOR SYMBOLS LEGEND.
2. INSTALL WATER, GAS, AND VENT PIPING SHOWN ABOVE THE CEILING UNLESS NOTED OTHERWISE.
3. INSTALL WASTE PIPING SHOWN BELOW THE FLOOR UNLESS NOTED OTHERWISE.
4. DO NOT RUN PIPING ABOVE ELECTRICAL PANELS. PROVIDE 4'-0" DEEP X 6'-6" HIGH CLEAR ACCESS SPACE IN FRONT OF PANELS. DO NOT RUN PIPING IN ELECTRICAL ROOMS.
5. FIELD DETERMINE EXACT SIZE, ELEVATION AND LOCATION OF EXISTING PIPING INSIDE THE BUILDING AT SPECIFIED CONNECTION POINTS PRIOR TO STARTING ANY WORK.
6. SAW CUT EXISTING FLOOR AS REQUIRED TO RUN NEW WASTE AND VENT PIPING, PATCH AND REPAIR TO MATCH EXISTING.
7. SAW CUT OR CORE DRILL ALL NEW PENETRATIONS THRU EXISTING MASONRY CONSTRUCTION.
8. PATCH AND REPAIR ALL EXISTING SURFACES DAMAGED BY NEW CONSTRUCTION TO MATCH EXISTING.
9. PROVIDE 3" MINIMUM VENT THRU ROOF. INCREASE VENT LINE 12" BELOW BUILDING INSULATION.
10. COORDINATE EXACT LOCATION OF FIXTURES AND DRAINS WITH ARCHITECTURAL DRAWINGS.

⬡SHEET KEYNOTES

1. CONNECT NEW 1½" COLD WATER TO EXISTING 1½" BUILDING COLD WATER SUPPLY.
2. RISE 1½" COLD WATER LINE UP SEE SHEET PL102.
3. CONNECT NEW 4" WASTE TO EXISTING 4" WASTE AT FLOOR. RISE 4" WASTE UP. SEE SHEET PL102.
4. EXISTING GAS METER.
5. 1¼" GAS LINE UP. SEE SHEET PL102.
6. UNIT HEATER. SEE SHEET MH101.
7. CONNECT NEW ADA LAVATORY TO EXISTING WATER, WASTE, AND VENT PIPING INSIDE OF PLUMBING CHASE.
8. CONNECT NEW ADA WATER CLOSET TO EXISTING PIPING.

PLUMBING SHEET INDEX

SHEET NO	SHEET TITLE
PL101	FIRST FLOOR PLUBMING PLAN
PL102	SECOND FLOOR PLUMBING PLAN
PL401	LARGE SCALE PLUMBING PLANS

HFSArchitects
ARCHITECTURE
INTERIORS
PLANNING
1484 South State Street
Salt Lake City, Utah 84115
801-596-0691/F: 596-0693
www.hfsa.com

CONSULTANT

SPECTRUM ENGINEERS
175 South Main Street, Suite 300
Salt Lake City, Utah 84111
801-328-5151
800-678-7077
FAX 801-328-5155
www.spectrum-engineers.com

Registered Professional Engineer
NEIL H. SPENCER
No. 5484
State of Utah

STORES & RECEIVING BUILDING EXPANSION / RENOVATION

Weber State University
Ogden, Utah

MARK	DATE	DESCRIPTION

DATE:	13 MARCH 2006
AGENCY PROJECT NO:	05276810
HFSA PROJECT NO:	0528.01
CAD DWG FILE NO:	
DRAWN BY:	TNB
CHECKED BY:	KDE
DESIGNED BY:	KDE
DWG TYPE:	MECHANICAL
ARCHITECTURAL PHASE:	CONSTRUCTION BID SET

SHEET TITLE

PLUMBING FLOOR PLANS

PL101

SHEET 22 OF 31

File name: P:\2006\20060013\1Drawings\Sheet\13PL101.dwg Last Plotted: 03/13/2006 @ 13:31 By: TNB

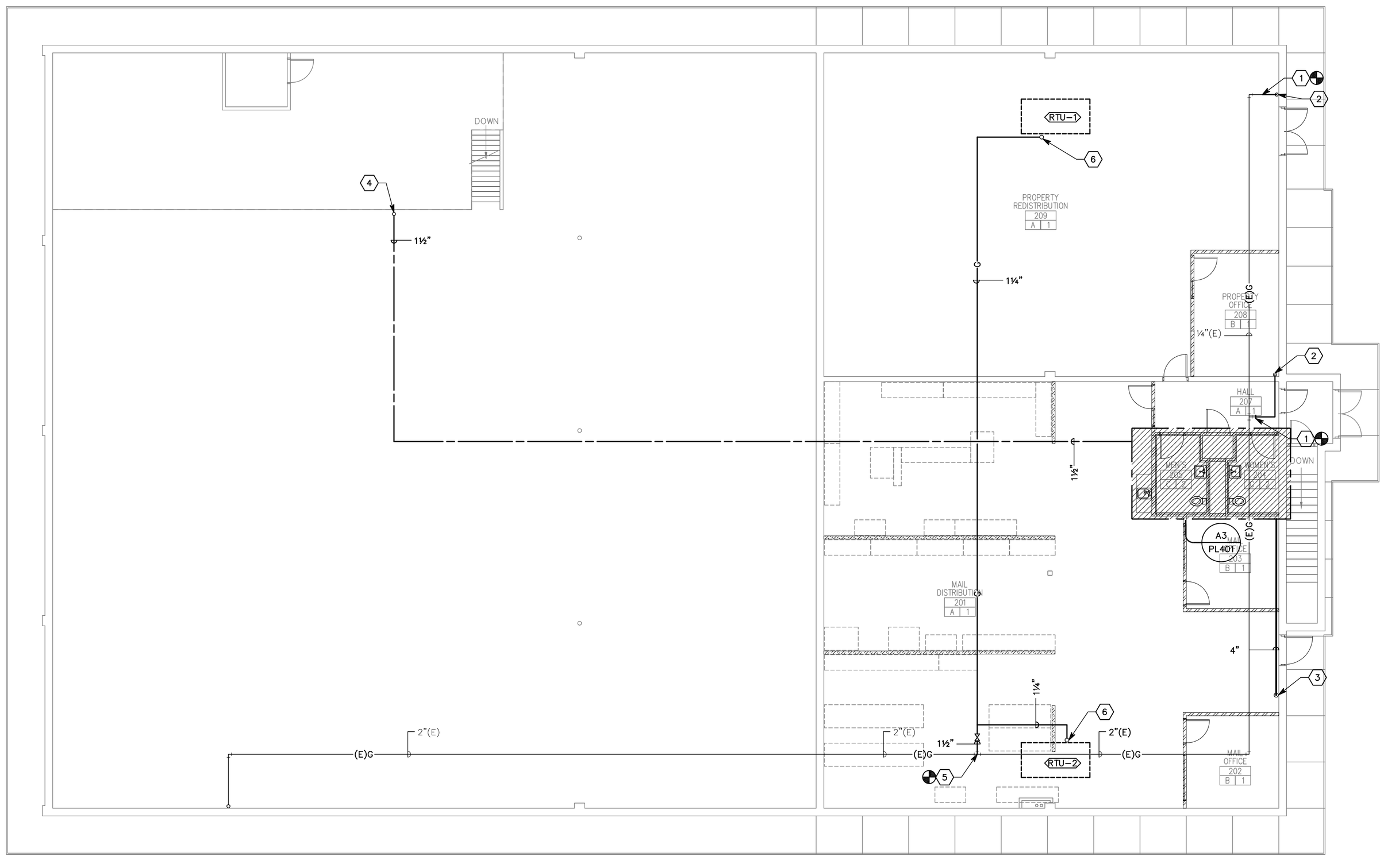

A1 SECOND FLOOR PLUMBING FLOOR PLAN

SCALE: 1/8"=1'-0"

0 4' 8' 16'

SHEET KEYNOTES

1. CONNECT TOT EXISTING 1¼" GAS LINE.
2. 1¼" GAS LINE DOWN. SEE SHEET PL101.
3. 4" WASTE LINE DOWNSEE SHEET PL101.
4. 1½" COLD WATER DOWN. SEE SHEET PL101.
5. CONNECT NEW 1½" GAS LINE TO EXISTING 2" GAS LINE.
6. GAS LINE UP TO ROOFTOP UNIT.

HFSArchitects

ARCHITECTURE
INTERIORS
PLANNING

1484 South State Street
Salt Lake City, Utah 84115
801-596-0691/F: 596-0693
www.hfsa.com

CONSULTANT

SPECTRUM ENGINEERS
175 South Main Street, Suite 300
Salt Lake City, Utah 84111
801-328-5151
800-678-7077
FAX 801-328-5155
www.spectrum-engineers.com

Registered Professional Engineer
NEIL H. SPENCER
No. 5484
State of Utah

STORES & RECEIVING BUILDING EXPANSION / RENOVATION

Weber State University
Ogden, Utah

MARK	DATE	DESCRIPTION

DATE:	13 MARCH 2006
AGENCY PROJECT NO:	05276810
HFSA PROJECT NO:	0528.01
CAD DWG FILE NO:	
DRAWN BY:	TNB
CHECKED BY:	KDE
DESIGNED BY:	KDE
DWG TYPE:	MECHANICAL
ARCHITECTURAL PHASE:	CONSTRUCTION BID SET

SHEET TITLE

PLUMBING FLOOR PLANS

PL102

SHEET 23 OF 31

File name: P:\2006\20060013\1Drawings\Sheet\13PL102.dwg Last Plotted: 03/13/2006 @ 13:31 By: TNB

DOMESTIC EXPANSION TANK

SYMBOL	MANUFACTURER	MODEL NO.	ACCEPTANCE VOLUME GALLONS	TOTAL VOLUME GALLONS	INITIAL FILL PRESSURE	COMMENTS
DET-1	BELL & GOSSETT	PT-5	0.9	2	40	

ELECTRIC DOMESTIC HOT WATER HEATER

SYMBOL	MANUFACTURER	MODEL NO.	TANK CAPACITY GALLONS	INPUT KW	VOLTS/ PHASE/ CYCLE	RECOVERY RATE GPH	WATER TEMP IN/OUT	COMMENTS
WH-1	A. O. SMITH	ELJC-15	15	1.5	120/1/60	7	40/130	

PLUMBING FIXTURE SCHEDULE

FIX NO.	FIXTURE	WASTE	TRAP	VENT	HW	CW	G	A	A	G	COMMENTS
P-1	ADA WATER CLOSET	4		2		1					
P-2	ADA LAVATORY	1 1/2	1 1/4	1 1/2	1/2	1/2					
P-3	BREAK ROOM SINK	2	1 1/2	1 1/2	1/2	1/2					
P-4	ADA WATER CLOSET										RECONNECT TO EXISTING PIPING
D-1	FLOOR DRAIN	2	2	1 1/2							

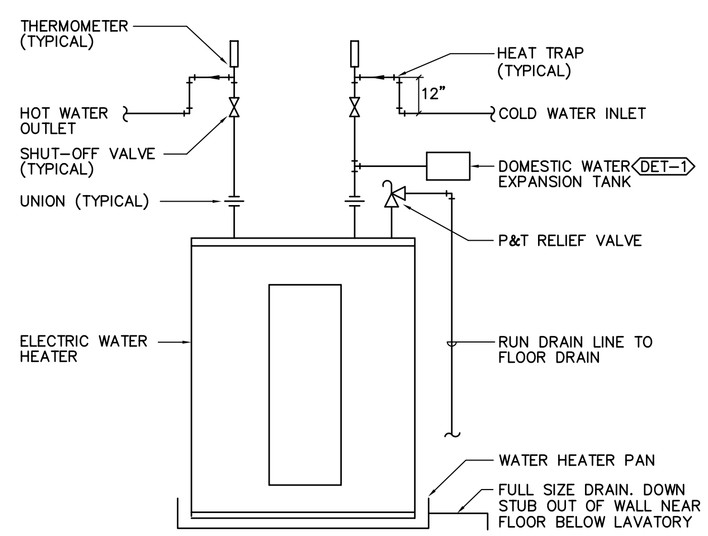

B3 WATER HEATER DETAIL
SCALE:

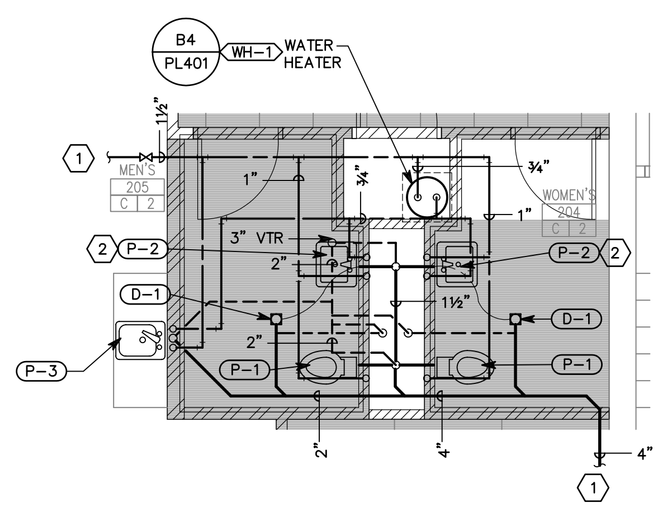

A3 ENLARGED PLUMBING PLAN
SCALE: 1/4"=1'-0"

SHEET KEYNOTES

1. SEE SHEET PL102 FOR CONTINUATION.
2. PROVIDE SMITH FIGURE 2698 TRAP FED TRAP PRIMER EXTEND ½" TRAP PRIMER SUPPLY LINE FROM "P" TRAP TO FLOOR DRAIN.

HFSArchitects
ARCHITECTURE
INTERIORS
PLANNING
1484 South State Street
Salt Lake City, Utah 84115
801-596-0691/F: 596-0693
www.hfsa.com

CONSULTANT
SPECTRUM ENGINEERS
175 South Main Street, Suite 300
Salt Lake City, Utah 84111
801-328-5151
800-678-7077
FAX 801-328-5155
www.spectrum-engineers.com

Registered Professional Engineer
NEIL H. SPENCER
No. 5484
State of Utah

STORES & RECEIVING BUILDING EXPANSION / RENOVATION
Weber State University
Ogden, Utah

MARK	DATE	DESCRIPTION

DATE:	13 MARCH 2006
AGENCY PROJECT NO:	05276810
HFSA PROJECT NO:	0528.01
CAD DWG FILE NO:	
DRAWN BY:	TNB
CHECKED BY:	KDE
DESIGNED BY:	KDE
DWG TYPE:	MECHANICAL
ARCHITECTURAL PHASE:	CONSTRUCTION BID SET

SHEET TITLE
LARGE SCALE PLUMBING PLANS

PL401

SHEET 24 OF 31

File name: P:\2006\20060013\1Drawings\Sheet\13PL401.dwg Last Plotted: 03/13/2006 @ 13:30 By: TNB

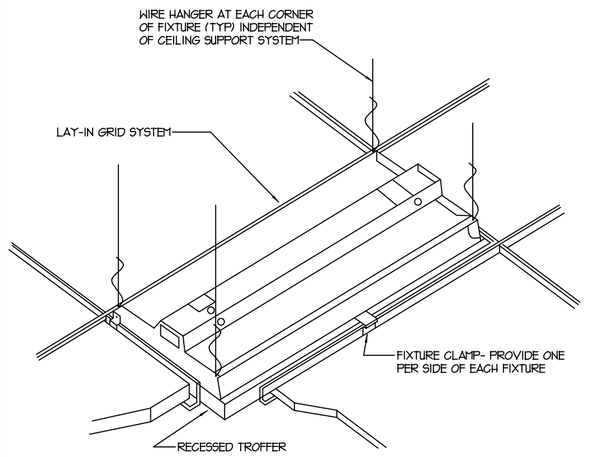

SCALE: N.T.S. — TYPICAL RECESSED FIXTURE MOUNTING DETAIL

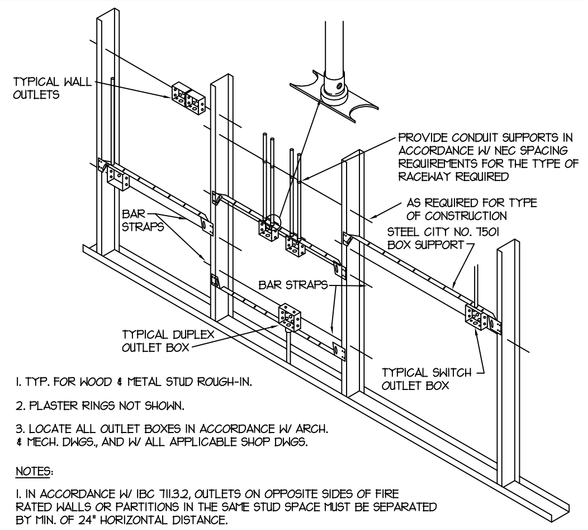

1. TYP. FOR WOOD & METAL STUD ROUGH-IN.
2. PLASTER RINGS NOT SHOWN.
3. LOCATE ALL OUTLET BOXES IN ACCORDANCE W/ ARCH. & MECH. DWGS, AND W/ ALL APPLICABLE SHOP DWGS.

NOTES:
1. IN ACCORDANCE W/ IBC 713.3.2, OUTLETS ON OPPOSITE SIDES OF FIRE RATED WALLS OR PARTITIONS IN THE SAME STUD SPACE MUST BE SEPARATED BY MIN. OF 24" HORIZONTAL DISTANCE.

SCALE: N.T.S. — TYPICAL ROUGH-IN REQUIREMENTS DETAIL

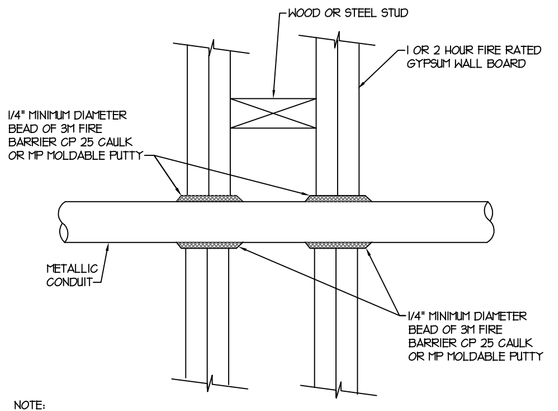

NOTE:
TYPICAL DETAILS SHOWING GENERAL FIRE STOPPING PROCEDURE. ACTUAL PROCEDURE DEPENDS UPON ANNULAR SPACE BETWEEN PIPE AND/OR INSULATION AND OPENING. FOLLOW MANUFACTURER'S INSTRUCTIONS.

SCALE: N.T.S. — FIRESTOP FOR METAL CONDUIT THROUGH GYPSUM WALL BOARD

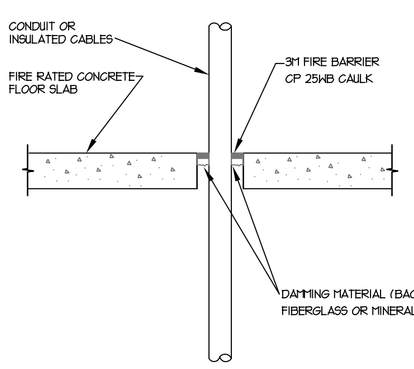

NOTE:
TYPICAL DETAILS SHOWING GENERAL FIRE STOPPING PROCEDURE. ACTUAL PROCEDURE DEPENDS UPON ANNULAR SPACE BETWEEN PIPE AND/OR INSULATION AND OPENING. FOLLOW MANUFACTURER'S INSTRUCTIONS.

SCALE: N.T.S. — TYPICAL FIRESTOP FOR CABLES/CONDUIT THROUGH CONCRETE FLOORING

LIGHTING FIXTURE SCHEDULE

SYMBOL	DESCRIPTION	LAMPS	APPROVED MANUFACTURERS	CATALOG NUMBER
T-1	8'/4' FLUORESCENT STRIP LIGHT WITH REFLECTOR AND WIRE GUARD. TO BE CHAIN HUNG.	4F32 PER 8'	LITHONIA	TC 232 MVOLT GEB101S 2HSGUN
			X	X
			X	X
T-2	2'/4' FLUORESCENT LIGHT FIXTURE WITH FLAT LENS.	2F32	LITHONIA	2SP8 G 232 A12125 MVOLT GEB101S
			X	X
			X	X
T-3	8' LINEAR LIGHT FIXTURE WITH 5% UP LIGHT.	4F32	PRUDENTIAL	M-OLT-2T8-08'-SPL-CCA-D9-SC-120-CA48-X3
			X	X
			X	X
T-4	1'X4' RECESSED FLUORESCENT LIGHT FIXTURE WITH FLANGE KIT.	2F32	LITHONIA	SP8 F 232 A12125 MVOLT GEB101S
			X	X
			X	X
EX-1	GREEN LED EXIT SIGN WITH BATTERY PACK.	INCLUDED	LITHONIA	LHQM S W 3 G 120/277 RD
			X	X
			X	X
EX-2	SAME AS EX-1 EXCEPT WITH REMOTE EXTERIOR EMERGENCY HEAD.	INCLUDED	LITHONIA	LHQM S W 3 G 120/277 ELA NX W2606
			X	X
			X	X

NOTES:
1. ALL FLUORESCENT LIGHTS SHALL HAVE ELECTRONIC PROGRAMMABLE START BALLASTS, 10%, TOTAL HARMONIC DISTORTION. UNIVERSAL, ADVANCE AND SYLVANIA ARE APPROVED MANUFACTURERS. BALLASTS TO HAVE 5 YEAR WARRANTY.
2. ALL FLUORESCENT LAMPS SHALL HAVE 3500° COLOR TEMPERATURE.
3. FIELD VERIFY ALL LIGHTING VOLTAGES PRIOR TO PLACING ANY ORDER.
4. THE WRITTEN CRITERIA OF THE FIXTURE DESCRIPTION TAKES PRECEDENCE OVER THE CATALOG NUMBER.
5. ALL MR16 LAMPS SHALL HAVE BOTTOM LENS AND 10,000 HOUR LIFE.

PANEL	"A2"	AIC RATING	22K AMPS
PHASE / WIRE	3 / 4	RATING	120 / 208 VOLTS
MAIN LUG	0 AMPS	SUBFEED LUGS	YES
MAIN BREAKER	125 AMPS	COMMENT	IG

CKT	LOCATION	RECEPT	LTG	OTHER	POLE	SIZE	PHASE	SIZE	POLE	OTHER	LTG	RECEPT	LOCATION	CKT
1	SPARE				1	20	A							2
3	SPARE				1	20	B							4
5	SPARE				1	20	C	30	3				SPARE	6
7	SPARE				1	20	A							8
9	SPARE				1	20	B							10
11	SPARE				1	20	C	20	3				SPARE	12
13	SPARE				1	20	A	20	1				SPARE	14
15	SPARE				1	20	B	20	1				SPARE	16
17	SPARE				1	20	C	20	1				SPARE	18
19	SPARE				1	20	A	20	1				SPARE	20
21	SPARE				1	20	B	20	1				SPARE	22
23	SPARE				1	20	C	20	1				SPARE	24
25	SPARE				1	20	A	20	1				SPARE	26
27	SPARE				1	20	B	20	1				SPARE	28
29	SPARE				1	20	C	20	1				SPARE	30
31	SPACE				1	20	A	20	1				SPACE	32
33	SPACE				1	20	B	20	1				SPACE	34
35	SPACE				1	20	C	20	1				SPACE	36
37	SPACE				1	20	A	20	1				SPACE	38
39	SPACE				1	20	B	20	1				SPACE	40
41	SPACE				1	20	C	20	1				SPACE	42
		VA	VA	VA	AMPS			KVA			VA	VA	VA	
		0	0	0	A	0	A	0	A		0	0	0	
		0	0	0	B	0	B	0	B		0	0	0	
		0	0	0	C	0	C	0	C		0	0	0	
		0	0	0		0	TOTAL	0			0	0	0	

PROVIDE NEW BREAKERS AS REQUIRED. 10,000 AIC

PANEL	"C"	AIC RATING	22K AMPS
PHASE / WIRE	3 / 4	RATING	120 / 208 VOLTS
MAIN LUG	0 AMPS	SUBFEED LUGS	YES
MAIN BREAKER	125 AMPS	COMMENT	IG

CKT	LOCATION	RECEPT	LTG	OTHER	POLE	SIZE	PHASE	SIZE	POLE	OTHER	LTG	RECEPT	LOCATION	CKT
1					1	20	A							2
3	EXISTING LOAD				1	20	B							4
5	EXISTING LOAD				1	20	C	50	3				SPARE	6
7	EXISTING LOAD				1	20	A	20	1				SPARE	8
9	EXISTING LOAD				1	20	B	20	1				SPARE	10
11	EXISTING LOAD				1	20	C	20	1				SPARE	12
13	EXISTING LOAD				1	20	A	20	1				SPARE	14
15	EXISTING LOAD				1	20	B	20	1				SPARE	16
17	EXISTING LOAD				1	20	C	20	1				SPARE	18
19	EXISTING LOAD				1	20	A	20	1				SPARE	20
21	EXISTING LOAD				1	20	B	20	1				SPARE	22
23	EXISTING LOAD				1	20	C	20	1				SPARE	24
25	EXISTING LOAD				1	20	A	20	1				SPARE	26
27	EXISTING LOAD				1	20	B	20	1				SPARE	28
29	EXISTING LOAD				1	20	C	20	1				SPARE	30
31	EXISTING LOAD				1	20	A	20	1				SPARE	32
33	SPACE				1	20	B	20	1				SPACE	34
35	SPACE				1	20	C	20	1				SPACE	36
37	SPACE				1	20	A	20	1				SPACE	38
39	SPACE				1	20	B	20	1				SPACE	40
41	SPACE				1	20	C	20	1				SPACE	42
		VA	VA	VA	AMPS			KVA			VA	VA	VA	
		0	0	0	A	0	A	0	A		0	0	0	
		0	0	0	B	0	B	0	B		0	0	0	
		0	0	0	C	0	C	0	C		0	0	0	
		0	0	0		0	TOTAL	0			0	0	0	

PROVIDE NEW BREAKERS AS REQUIRED. 10,000 AIC

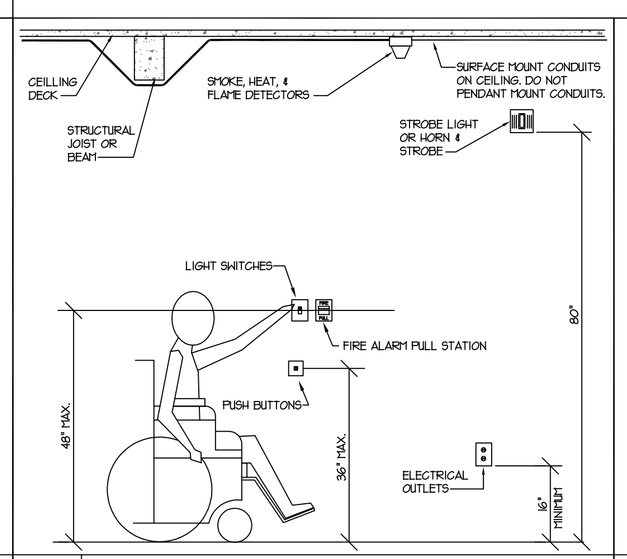

SCALE: N.T.S. — STANDARD HEIGHTS FOR HANDICAPPED ACCESS

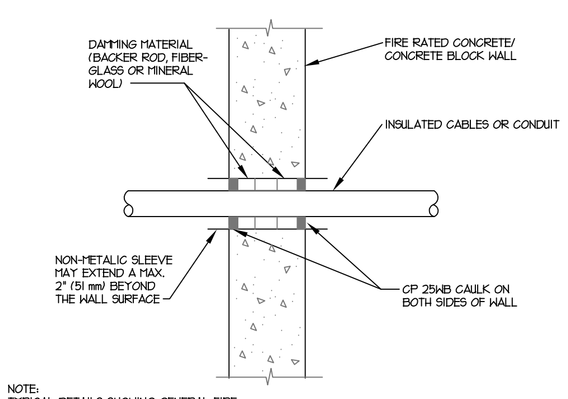

NOTE:
TYPICAL DETAILS SHOWING GENERAL FIRE STOPPING PROCEDURE. ACTUAL PROCEDURE DEPENDS UPON ANNULAR SPACE BETWEEN PIPE AND/OR INSULATION AND OPENING. FOLLOW MANUFACTURER'S INSTRUCTIONS.

SCALE: N.T.S. — TYPICAL FIRESTOP FOR CABLES/CONDUIT THROUGH CONCRETE WALLS

POWER SYSTEMS SYMBOL LIST

SYMBOL	DESCRIPTION
	DUPLEX CONVENIENCE OUTLET - 20 AMP
	DUPLEX CONVENIENCE OUTLET - 20 AMP GROUND FAULT INTERRUPTER
	4-PLEX CONVENIENCE OUTLET - 20 AMP
J	JUNCTION BOX - SIZE AND FUNCTION AS REQUIRED
	CONDUITS CONCEALED IN CEILING AND WALLS
	ARROWS INDICATE HOME RUNS - LINES INDICATE NUMBER CONDUCTORS
	FUSED DISCONNECT SWITCH - SIZE AS REQUIRED
	MOTOR LOCATION
$T	MANUAL DISCONNECT WITH THERMAL OVERLOAD PROTECTION
	ELECTRICAL PANEL LOCATION
M	ELECTRICAL METER LOCATION
W.P.	INDICATES WEATHER PROOF EQUIPMENT
XX-1	MECHANICAL EQUIPMENT CALLOUT
X	REFERENCE NOTE CALLOUT

LIGHTING SYSTEMS SYMBOL LIST

SYMBOL	DESCRIPTION
J	SURFACE MOUNTED FLUORESCENT FIXTURE
	FLUORESCENT STRIP LIGHT FIXTURE
	RECESSED FIXTURE
	WALL MOUNTED FIXTURE
	SURFACE MOUNTED FIXTURE
	PENDANT MOUNTED FIXTURE
EN L	FIXTURES ON EMERGENCY POWER OR NIGHT LIGHT
	EXIT LIGHT. ARROWS SHOW EXIT DIRECTION, WITH EMERGENCY LIGHTS
	WALL MOUNTED LIGHT FIXTURE
	EMERGENCY BATTERY OPERATED LIGHT-SINGLE OR TWIN BEAM
	POST MOUNTED PARKING OR WALKWAY LIGHTING
	TRACK LIGHTING FIXTURE
$	SINGLE POLE TOGGLE SWITCH - 20 AMP
$a,b	SINGLE POLE TOGGLE SWITCH - 20 AMP, LETTERS INDICATE SWITCH ASSIGNMENT
$3	THREE WAY TOGGLE SWITCH - 20 AMP
D	SLIDE CONTROL DIMMER
T-X	LIGHTING FIXTURE CALLOUT. NUMBER INDICATES A SUGGESTED QUANTITY- TO BE VERIFIED

COMMUNICATION SYSTEMS SYMBOL LIST

SYMBOL	DESCRIPTION
	TELEPHONE TERMINAL BOARD
	FLUSH TELE/DATA OUTLET

MECHANICAL EQUIPMENT SCHEDULE

NAME OF MECHANICAL EQUIPMENT	EXHAUST FAN	ROOF TOP UNIT	ROOF TOP UNIT	WATER HEATER	
EQUIPMENT NO.	EF-1,2	RTU-1	RTU-2	WH-1	--
RATING/WATTS	--	--	--	1.5KW	--
VOLTAGE	120	208	208	120	--
PHASE	1	3	3	1	--
MOTOR DATA: AMPS	1	36	46	14	--
MOTOR DATA: WIRE SIZE	2 #12	3 #8	3 #6	2 #12	--
MOTOR DATA: GROUND WIRE	1 #12	1 #10	1 #10	1 #12	--
MOTOR DATA: CONDUIT SIZE	3/4"	3/4"	3/4"	3/4"	--
MOTOR DATA: FUSE DISC. SW.	--	60	60	--	--
MOTOR DATA: TYPE RK1 FUSES	--	50	60	--	--
MOTOR DATA: NON-FUSE SW.	--	--	--	--	--
MOTOR DATA: CAPACITOR (KVAR)	--	--	--	--	--
NOTES	1	2,3	2,3	1	--

NOTES:
1. PROVIDE THERMAL OVERLOAD SWITCH.
2. PROVIDE SITE DISCONNECT.
3. PROVIDE DUCT DETECTOR IN SUPPLY, RETURN DUCT, AND TIE TO FACP. ALSO TIE THE UNIT TO FACP FOR FAN SHUT DOWN.

GENERAL NOTES:

1. IN THE EXISTING SPACES TO BE RENOVATED, THE CONTRACTOR SHALL REMOVE ALL LIGHT FIXTURES, SWITCHES, WIRING, CONDUIT, WIRING DEVICES, FIRE ALARM DEVICES, SPEAKERS, VOLUME CONTROLS, ETC. AS REQUIRED WHETHER OR NOT SHOWN ON THE DRAWINGS. COORDINATE THIS WORK WITH GENERAL CONTRACTOR.
2. ALL MATERIALS TO BE REMOVED AND RETURNED TO THE OWNER. MATERIALS WHICH THE OWNER DECIDES NOT TO KEEP SHALL BE SALVAGED AND REMOVED FROM THE SITE BY THE CONTRACTOR.
3. ALL CONCEALED CONDUIT THAT CANNOT BE REMOVED SHALL BE CUT FLUSH WITH THE FINISH SURFACES AND CAPPED OFF AFTER THE WIRING HAS BEEN DISCONNECTED AT THE PANEL AND REMOVED FROM THE CONDUIT.
4. IN AREAS WHERE CIRCUIT CONTINUITY IS INTERRUPTED, BUT MUST BE MAINTAINED BECAUSE OF THE NATURE OF THE FACILITY, MAKE ALL THE NECESSARY MODIFICATIONS TO THE CIRCUITS IN ORDER TO MAINTAIN THE CIRCUIT INTEGRITY.
5. THE CONTRACTOR SHALL PATCH THE WALLS AND CEILINGS WHERE THE DEVICES ARE REMOVED TO MATCH THE EXISTING WALLS AND CEILINGS.
6. THE COLOR OF ALL THE NEW DEVICES AND COVERPLATES SHALL MATCH THE COLOR OF THE EXISTING DEVICES AND COVERPLATES.
7. REFER TO THE ARCHITECTURAL REFLECTED CEILING PLANS FOR THE EXACT LOCATION OF ALL LIGHTING FIXTURES.
8. THE COLOR OF THE LIGHT FIXTURES SHALL BE SELECTED BY THE ARCHITECT.
9. MINIMUM SIZE OF CONDUIT TO BE 3/4". ALUMINUM CONDUITS SHALL NOT BE USED.
10. USE RIGID STEEL SET SCREW TYPE FITTINGS ONLY. DIE CAST FITTINGS SHALL NOT BE USED.
11. SUPPORT THE LAY-IN TYPE FIXTURES FROM THE CEILING DECK INDEPENDENT OF THE CEILING GRID, AS SHOWN ON THE TYPICAL RECESSED FIXTURE MOUNTING DETAIL.
12. REFER TO THE MECHANICAL SHEETS FOR THE EXACT LOCATION OF THE MECHANICAL EQUIPMENT.
13. ALL NEW WORK MUST MEET THE CURRENT ADOPTED NATIONAL ELECTRICAL CODE.
14. NOT MORE THAN THREE (3) CIRCUITS, SHALL BE INSTALLED IN A CONDUIT. EACH CIRCUIT SHALL CONSIST OF 1 CONDUCTOR FOR EACH PHASE, 1 NEUTRAL, AND 1 GROUND, FOR A TOTAL OF FIVE CONDUCTORS.
15. THE SIZE OF THE NEUTRAL CONDUCTORS SHALL BE NO. 10 AWG FOR ALL HOME RUNS WITH COMMON NEUTRAL (LIGHTING AND POWER CIRCUITS).
16. FOR SPECIFICATION OF PULL WIRES IN EMPTY CONDUITS, REFER TO THE ELECTRICAL SPECIFICATION FOR RACEWAYS SECTION 16110.
17. THE MINIMUM SIZE OF THE CONDUCTORS ARE TO BE #12 AWG THWN COPPER, UNLESS INDICATED OTHERWISE ON THE DRAWINGS.
18. DETAILS ARE SHOWN ON DIFFERENT SHEETS. THE CONTRACTOR SHALL REFER TO THOSE DETAILS WHETHER OR NOT CALLED IN REFERENCE NOTES.
19. ALL J-BOXES SHALL HAVE MINIMUM DEPTH OF 2-1/8" UNLESS OTHERWISE SPECIFIED. SECURE ALL J-BOXES AS SHOWN IN THE DETAILS. FURNISH AND INSTALL PROPER MUD RINGS.
20. ALL NEW EXPOSED CONDUIT MUST RUN AGAINST THE WALLS OR CEILINGS. DO NOT PENDANT MOUNT ANY CONDUIT FROM THE CEILINGS.
21. ALL THE HOMERUNS MUST BE ACCESSIBLE. DO NOT CARRY A HOMERUN FROM ONE DEVICE TO ANOTHER WHICH IS TIED TO A SEPARATE HOMERUN INSIDE THE WALL. MARK ON ALL THE J-BOXES THE CIRCUIT NAMES AND NUMBERS. USE NO. 10 THWN CONDUCTORS FOR CONDUCTOR LENGTH OVER 100 FEET, NO. 8 THWN OVER 200 FEET, NO. 6 THWN OVER 300 FEET AND NO. 4 THWN OVER 400 FEET LENGTH.
22. COORDINATE WITH THE OWNER AND ARCHITECT FOR THE EXACT LOCATION OF THE OUTLETS.
23. LIGHT SWITCHES INSTALLED ADJACENT TO EACH OTHER, SHALL BE GANGED TOGETHER WITH ONE PIECE COVERPLATE.
24. USE EPOXY ANCHORS TO SUPPORT THE ELECTRICAL EQUIPMENT. EXPANSION ANCHOR BOLTS ARE NOT ACCEPTED.
25. AT THE END OF THE JOB, PROVIDE BLANK COVER PLATES TO MATCH THE OTHER COVER PLATES FOR ALL J-BOXES WHERE DEVICES HAVE NOT YET BEEN INSTALLED.
26. ALL MATERIALS USED IN THIS INSTALLATION SHALL BE U.L. APPROVED AND NEW.
27. ALL ELECTRICAL WIRING MUST BE IN CONDUIT (ROMEX AND MC CABLE NOT PERMITTED).
28. FLEXIBLE CONDUITS CAN ONLY BE USED FOR SHORT RUNS (6' MAXIMUM).
29. NO CONDUITS SHALL RUN IN DUCT WORK.
30. TEMPORARY ELECTRICAL SERVICE IS TO BE PROVIDED BY THE ELECTRICAL CONTRACTOR AND REMOVED BY THE ELECTRICAL CONTRACTOR.
31. FOR ALL INCANDESCENT LIGHT FIXTURES 150°C RATED CONDUCTORS ARE REQUIRED.
32. PRIOR TO SUBMITTING A BID THE ELECTRICAL CONTRACTOR SHALL INSPECT THE SITE AND INCLUDE IN HIS BID PACKAGE ALL CHARGES DUE TO EXISTING CONDITIONS. SHOP DRAWINGS ARE REQUIRED. ALL LABOR, MATERIAL AND WORKMANSHIP SHALL BE GUARANTEED FOR A PERIOD OF 1 YEAR FROM THE DATE OF ACCEPTANCE BY THE TENANT. REPLACE OR REPAIR ALL DEFECTS DURING THE GUARANTEED PERIOD.
33. THE ELECTRICAL CONTRACTOR SHALL TERMINATE THE ELECTRICAL CONNECTIONS TO ALL THE EQUIPMENT BY PROVIDING THE NECESSARY MALE/FEMALE CONNECTOR, RECEPTACLE, PLUG, ETC.
34. ALL DUPLEX OUTLETS AND SWITCHES SHALL BE 20 AMP., 120 VOLT SPEC GRADE. HUBBELL AND PASS & SEYMOUR AND LEVITON ARE APPROVED MANUFACTURERS.
35. THE ELECTRICAL CONTRACTOR SHALL NOTIFY AND COORDINATE WITH THE MECHANICAL CONTRACTOR SO THAT NO PIPING, DUCTS, OR OTHER EQUIPMENT SHALL BE INSTALLED IN ENTRY OR PASS THROUGH ELECTRICAL ROOM OR SPACES ABOVE OR BELOW ELECTRICAL PANELS.
36. ELECTRICAL CONTRACTOR SHALL VERIFY ALL ELECTRICAL LOADS (VOLTAGE, PHASE, CONNECTION REQUIREMENT, ETC.) OF EQUIPMENT FURNISHED UNDER OTHER DIVISIONS WITH APPROVED SHOP DRAWINGS PRIOR TO BEGINNING ROUGH-IN.
37. THE CONTRACTOR SHALL INFORM THE ARCHITECT/ENGINEER IN WRITING OF ANY DISCREPANCIES FOUND BETWEEN THE INTENDED FUNCTION OF EQUIPMENT AND EQUIPMENT SPECIFIED IN THE CONTRACT DOCUMENTS A MINIMUM OF TEN (10) WORKING DAYS PRIOR TO ISSUANCE OF THE FINAL BID. FAILURE TO REPORT ANY DISCREPANCY (CATALOG NUMBERS, DISCONTINUED ITEMS, ETC.) DOES NOT RELIEVE THE CONTRACTOR FROM PROVIDING EQUIPMENT WHICH SHALL CONFORM TO AND FULFILL THE INTENT OF THE CONTRACT DOCUMENTS. NOR SHALL IT BE USED AS A CONDITION TO OBTAIN ADDITIONAL FUNDS FROM THE OWNER AFTER THE CONTRACT IS AWARDED. THE CONTRACTOR SHALL REQUEST ALL CLARIFICATIONS OF CONTRACT DOCUMENT REQUIREMENTS IN WRITING TO THE ARCHITECT/ENGINEER A MINIMUM OF TEN (10) WORKING DAYS PRIOR TO ISSUANCE OF THE FINAL ADDENDUM.
38. PROVIDE TYPED LABEL FOR ALL DUPLEX OUTLETS AND LIGHT SWITCHES TO INDICATE WHICH CIRCUIT THEY ARE TIED TO.
39. INSTALL EXIT SIGNS ON THE WALL IF POSSIBLE.
40. CONTRACT DOCUMENTS SHALL TAKE PRECEDENCE OVER SHOP DRAWINGS UNLESS SPECIFICALLY NOTED OTHERWISE.

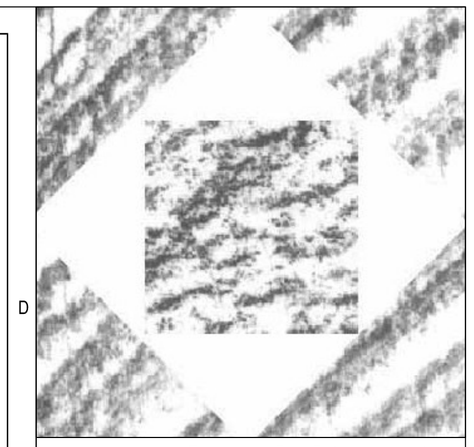

HFSArchitects
ARCHITECTURE
INTERIORS
PLANNING
1484 South State Street
Salt Lake City, Utah 84115
801-596-0691/F: 596-0693
www.hfsa.com

CONSULTANT

E. C. E. INC., CONSULTING ENGINEERS
939 SO. WEST TEMPLE — PHONE: (801) 521-8007
SLC, UTAH 84101 — FAX: (801) 521-8507

LICENSED PROFESSIONAL ENGINEER — NO. 334543-2202 — MANSOUR AGHDASI — STATE OF UTAH

STORES & RECEIVING BUILDING EXPANSION/RENOVATION

Weber State University
Ogden, Utah

MARK	DATE	DESCRIPTION
	02-27-06	100% REVIEW SET
	03-14-06	CONSTRUCTION DOCUMENT

DATE: 03-14-06
AGENCY PROJECT NO:
HFSA PROJECT NO:
CAD DWG FILE NO: 3104
DRAWN BY: JB
CHECKED BY: MA
DESIGNED BY:
DWG TYPE:
ARCHITECTURAL PHASE:

SHEET TITLE
DETAILS, SCHEDULES, SYMBOLS LIST & GENERAL NOTES

E0.01

3104

REFERENCE NOTES:

1. DISCONNECT THE POWER AND REMOVE THE ELECTRICAL DEVICES SUCH AS LIGHTING FIXTURES, OUTLETS, J-BOXES, ECT, IN THE WALLS BEING REMOVED WEATHER OR NOT SHOWN. REMOVE CONDUITS, CONDUCTORS, ECT, ALL THE WAY BACK TO THE POINT OF ORIGIN. COORDINATE THIS WORK WITH THE GENERAL CONTRACTOR.
2. EXISTING ELECTRICAL DEVICES TO REMAIN.
3. REPLACE THE EXISTING PANEL "C" WITH A NEW, 42 CIRCUIT PANEL, 100 AMP, 3 PHASE. RELOCATE THE PANEL AND THE ASSOCIATED FEEDERS TO THE NEW LOCATION. EXTEND ALL THE EXISTING CIRCUITS TIED TO THIS PANEL THAT ARE NOT BEING REMOVED TO THE NEW LOCATION. FIELD VERIFY THE FEEDER ROUTE. PROVIDE CIRCUIT BREAKERS IN THE NEW PANEL TO ACCOMMODATE THE EXISTING AND NEW CIRCUITS. FIELD VERIFY.
4. FURNISH AND INSTALL NEW 125 AMP 3 PHASE, 42 CIRCUIT PANEL "A2". FEED THE NEW PANEL FROM A NEW 125 AMP, 3 POLE CIRCUIT BREAKER IN THE EXISTING PANEL "A1". THE NEW CIRCUIT BREAKER SHALL HAVE THE SAME AIC RATING AS THE REST OF THE BREAKERS IN THE PANEL. FIELD VERIFY. UTILIZE 4#1, 1#6, 1 1/2"C.

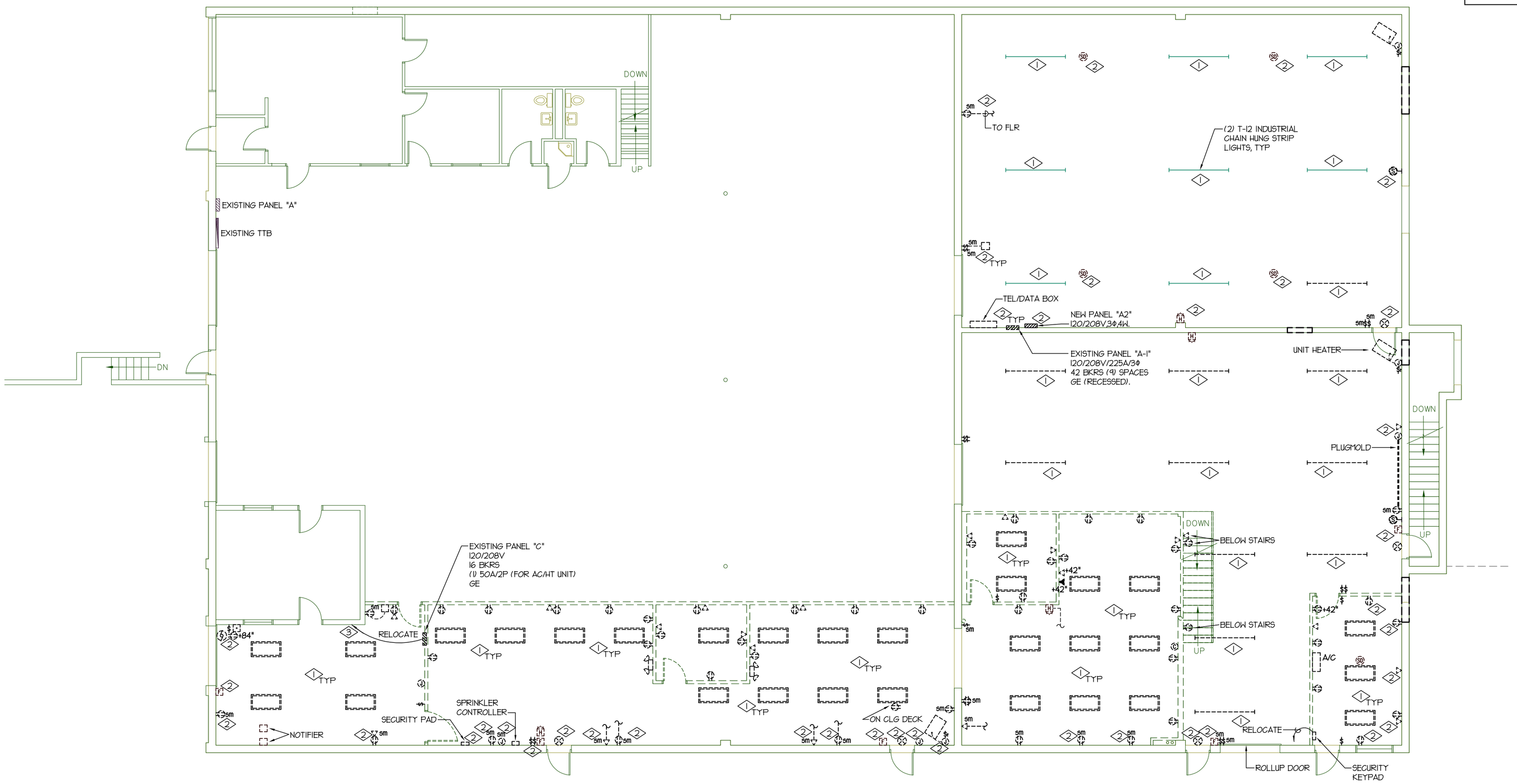

N

DEMOLITION MAIN FLOOR PLAN – ELECTRICAL

SCALE: 1/8" = 1'-0"

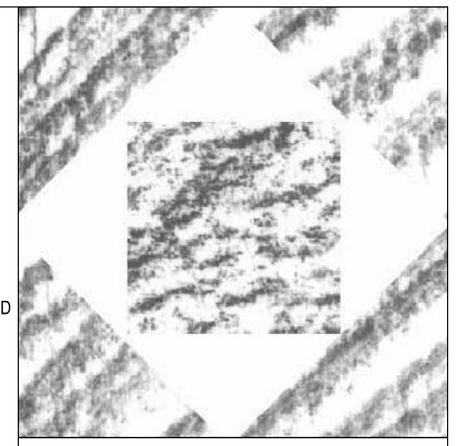

HFSArchitects

ARCHITECTURE
INTERIORS
PLANNING

1484 South State Street
Salt Lake City, Utah 84115
801-596-0691/F: 596-0693
www.hfsa.com

CONSULTANT

E. C. E. INC., CONSULTING ENGINEERS
939 SO. WEST TEMPLE SLC, UTAH 84101
PHONE (801) 521-8007 FAX: (801) 521-8057

LICENSED PROFESSIONAL ENGINEER NO. 334543-2202 MANSOUR AGHDASI STATE OF UTAH

STORES & RECEIVING BUILDING EXPANSION/RENOVATION

Weber State University
Ogden, Utah

MARK	DATE	DESCRIPTION
	02-27-06	100% REVIEW SET
	03-14-06	CONSTRUCTION DOCUMENT

DATE: 03-14-06
AGENCY PROJECT NO:
HFSA PROJECT NO:
CAD DWG FILE NO: 3104
DRAWN BY: JB
CHECKED BY: MA
DESIGNED BY:
DWG TYPE:
ARCHITECTURAL PHASE:

SHEET TITLE

DEMOLITION FLOOR PLAN– ELECTRICAL

E1.01

SHEET 26 OF 31

3104

REFERENCE NOTES:

1. DISCONNECT THE POWER AND REMOVE THE ELECTRICAL DEVICES SUCH AS LIGHTING FIXTURES, OUTLETS, J-BOXES, ECT, IN THE WALLS BEING REMOVED WEATHER OR NOT SHOWN. REMOVE CONDUITS, CONDUCTORS, ECT, ALL THE WAY BACK TO THE POINT OF ORIGIN. COORDINATE THIS WORK WITH THE GENERAL CONTRACTOR.
2. EXISTING ELECTRICAL DEVICES TO REMAIN.
3. RELOCATE THE EXISTING PANEL AND THE ASSOCIATED FEEDERS TO THE NEW LOCATION. EXTEND ALL THE EXISTING CIRCUITS TIED TO THIS PANEL THAT ARE NOT BEING REMOVED TO THE NEW LOCATION. FIELD VERIFY THE FEEDER ROUTE.

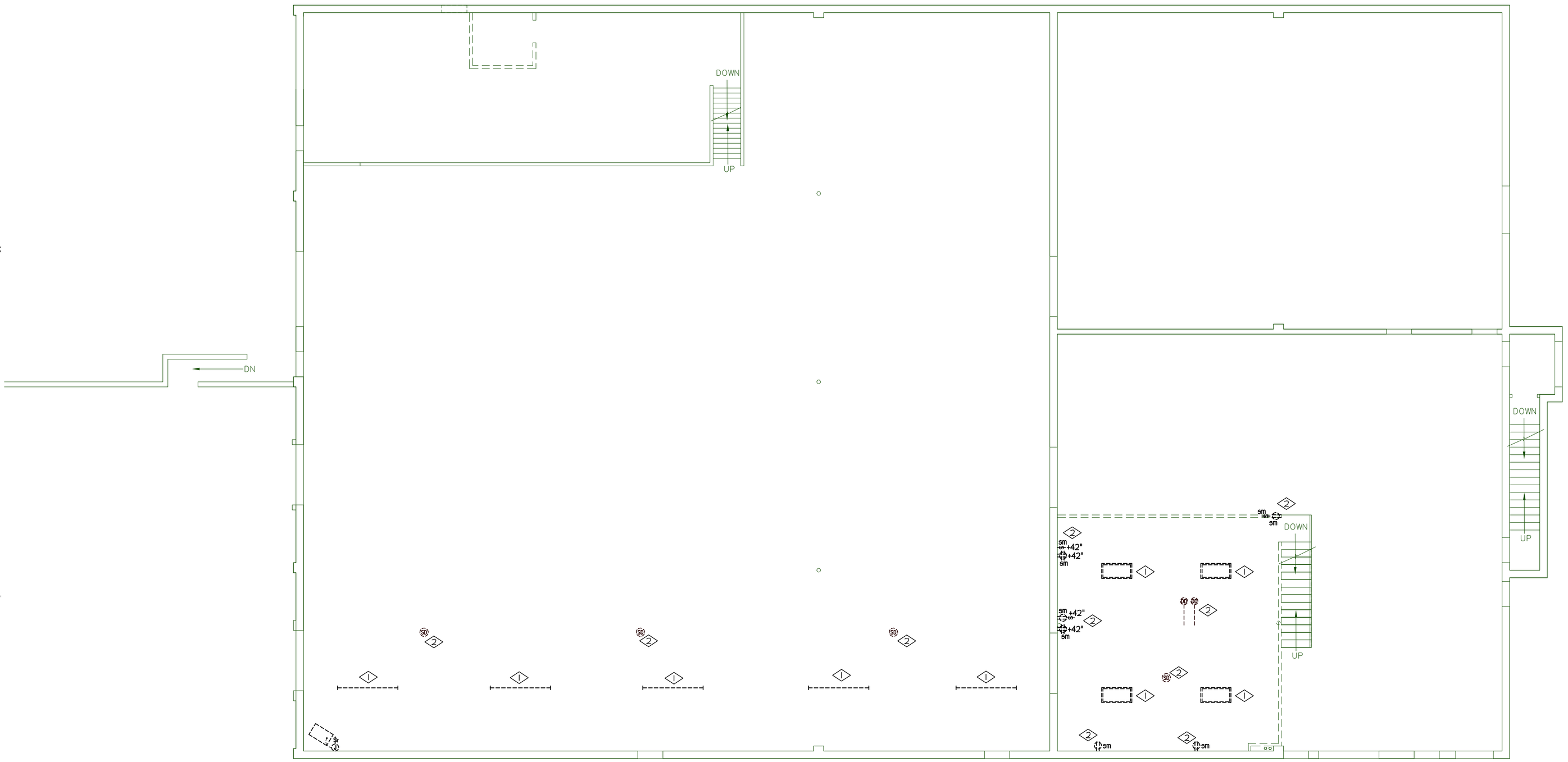

N

DEMOLITION UPPER FLOOR PLAN – ELECTRICAL

SCALE: 1/8" = 1'-0"

HFSArchitects

ARCHITECTURE
INTERIORS
PLANNING

1484 South State Street
Salt Lake City, Utah 84115
801-596-0691/F: 596-0693
www.hfsa.com

CONSULTANT

E. C. E. INC., CONSULTING ENGINEERS
939 SO. WEST TEMPLE
SLC, UTAH 84101
PHONE: (801) 521-8007
FAX: (801) 521-8057

LICENSED PROFESSIONAL ENGINEER
NO. 334543-2202
MANSOUR AGHDASI
STATE OF UTAH

STORES & RECEIVING BUILDING EXPANSION/RENOVATION

Weber State University
Ogden, Utah

MARK	DATE	DESCRIPTION
	02-27-06	100% REVIEW SET
	03-14-06	CONSTRUCTION DOCUMENT

DATE: 03-14-06

AGENCY PROJECT NO:
HFSA PROJECT NO:
CAD DWG FILE NO: 3104
DRAWN BY: JB
CHECKED BY: MA
DESIGNED BY:
DWG TYPE:
ARCHITECTURAL PHASE:

SHEET TITLE

DEMOLITION UPPER FLOOR PLAN– ELECTRICAL

E1.02

SHEET 27 OF 31

3104

REFERENCE NOTES:

1. TIE EACH HOME RUN TO THE NEAREST 120 VOLT 20 AMP DEDICATED CIRCUIT IN THE NEAREST PANEL WITH AVAILABLE CAPACITY. PROVIDE CONDUITS, CONDUCTORS, CIRCUIT BREAKERS, ECT, FOR A COMPLETE INSTALLATION. FIELD VERIFY.
2. FURNISH AND INSTALL A FLOOR BOX WITH A DUPLEX OUTLET, AND A J-BOX FOR A VOICE/DATA. TIE THE DUPLEX OUTLETS TO THE INDICATED CIRCUIT. RUN (2) 1" CONDUITS WITH PULL STRING FROM THE DATA J-BOX TO THE CABLE TRAY. HUBBELL AND WALKER ARE THE APPROVED MANUFACTURES. SAW CUT EXISTING CONCRETE TO INSTALL THE NEW FLOOR BOXES.
3. FURNISH AND INSTALL A 4"X4"X2 1/8" J-BOX IN THE APPROXIMATE LOCATION SHOWN. FOR VOICE/DATA. RUN A 1" CONDUIT WITH PULL STRING FROM THE J-BOX TO THE CABLE TRAY. COORDINATE WITH THE OWNER FOR LOCATION PRIOR TO ROUGH IN.
4. FURNISH AND INSTALL NEW FIRE ALARM DEVICES IN THE APPROXIMATE LOCATION SHOWN. THE NEW DEVICES SHALL BE THE SAME/COMPATIBLE WITH THE EXISTING FIRE ALARM SYSTEM. TIE THE NEW DEVICES TO THE EXISTING FIRE ALARM CONTROL PANEL (NOTIFIER). UTILIZE A CLASS "A" LOOP. PROVIDE ADDITIONAL SOFTWARE, HARDWARE, BATTERIES, ETC., FOR A COMPLETE WORKING INSTALLATION. TEST AND CERTIFY THE SYSTEM TO MEET AHJ'S REQUIREMENTS AFTER THE DEVICES ARE INSTALLED. FIELD VERIFY.

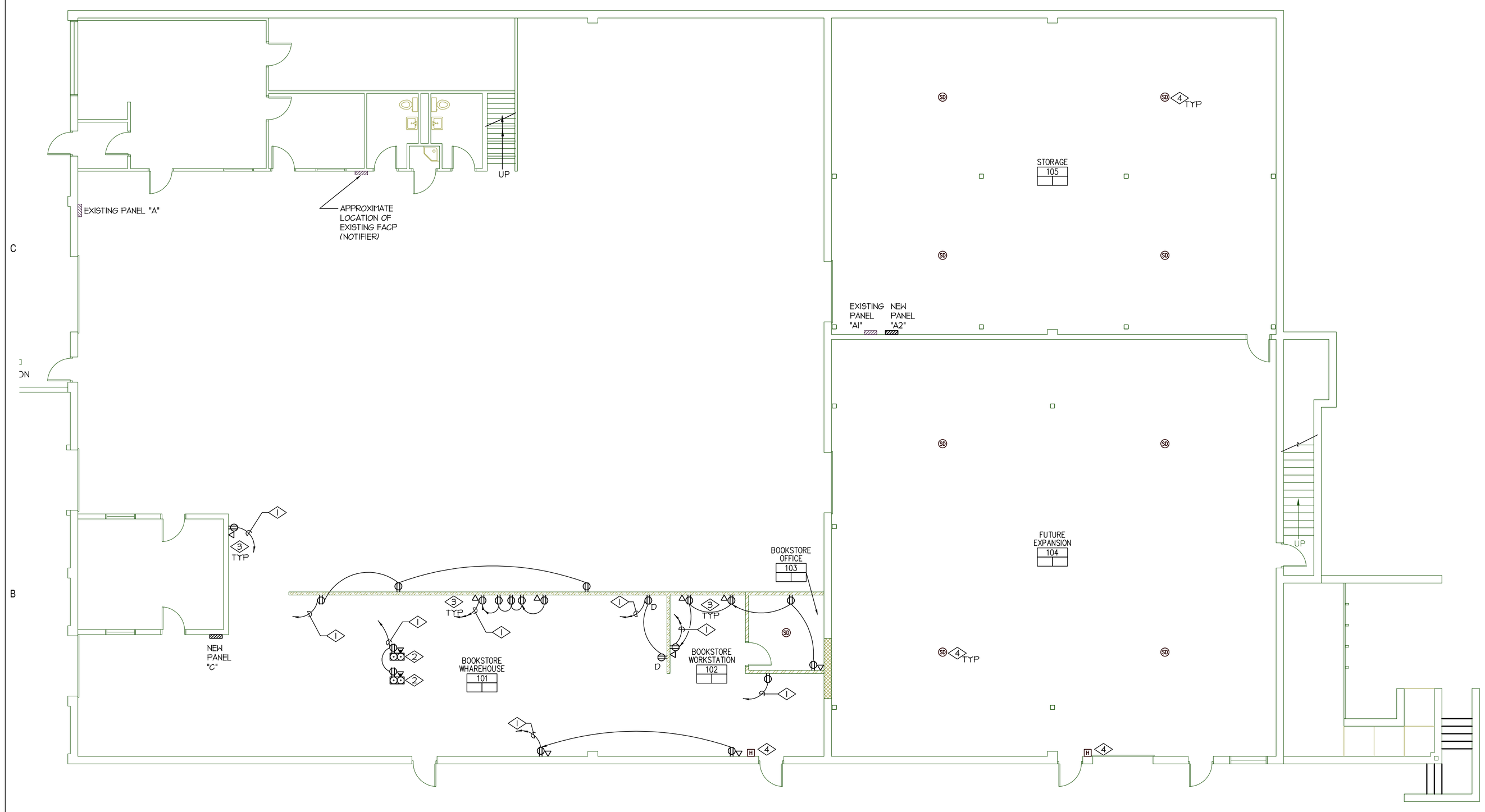

N

MAIN FLOOR PLAN – ELECTRICAL

SCALE: 1/8" = 1'-0"

HFSArchitects

ARCHITECTURE
INTERIORS
PLANNING

1484 South State Street
Salt Lake City, Utah 84115
801-596-0691/F: 596-0693
www.hfsa.com

CONSULTANT

ECE
E. C. E. INC., CONSULTING ENGINEERS
939 SO. WEST TEMPLE SLC, UTAH 84101
PHONE: (801) 521-8007
FAX: (801) 521-8057

LICENSED PROFESSIONAL ENGINEER
NO. 334543-2202
MANSOUR AGHDASI
STATE OF UTAH

STORES & RECEIVING BUILDING EXPANSION/RENOVATION

Weber State University
Ogden, Utah

MARK	DATE	DESCRIPTION
	02-27-06	100% REVIEW SET
	03-14-06	CONSTRUCTION DOCUMENT

DATE: 03-14-06
AGENCY PROJECT NO:
HFSA PROJECT NO:
CAD DWG FILE NO: 3104
DRAWN BY: JB
CHECKED BY: MA
DESIGNED BY:
DWG TYPE:
ARCHITECTURAL PHASE:

SHEET TITLE

MAIN FLOOR PLAN–ELECTRICAL

E2.01

SHEET 28 OF 31

3104

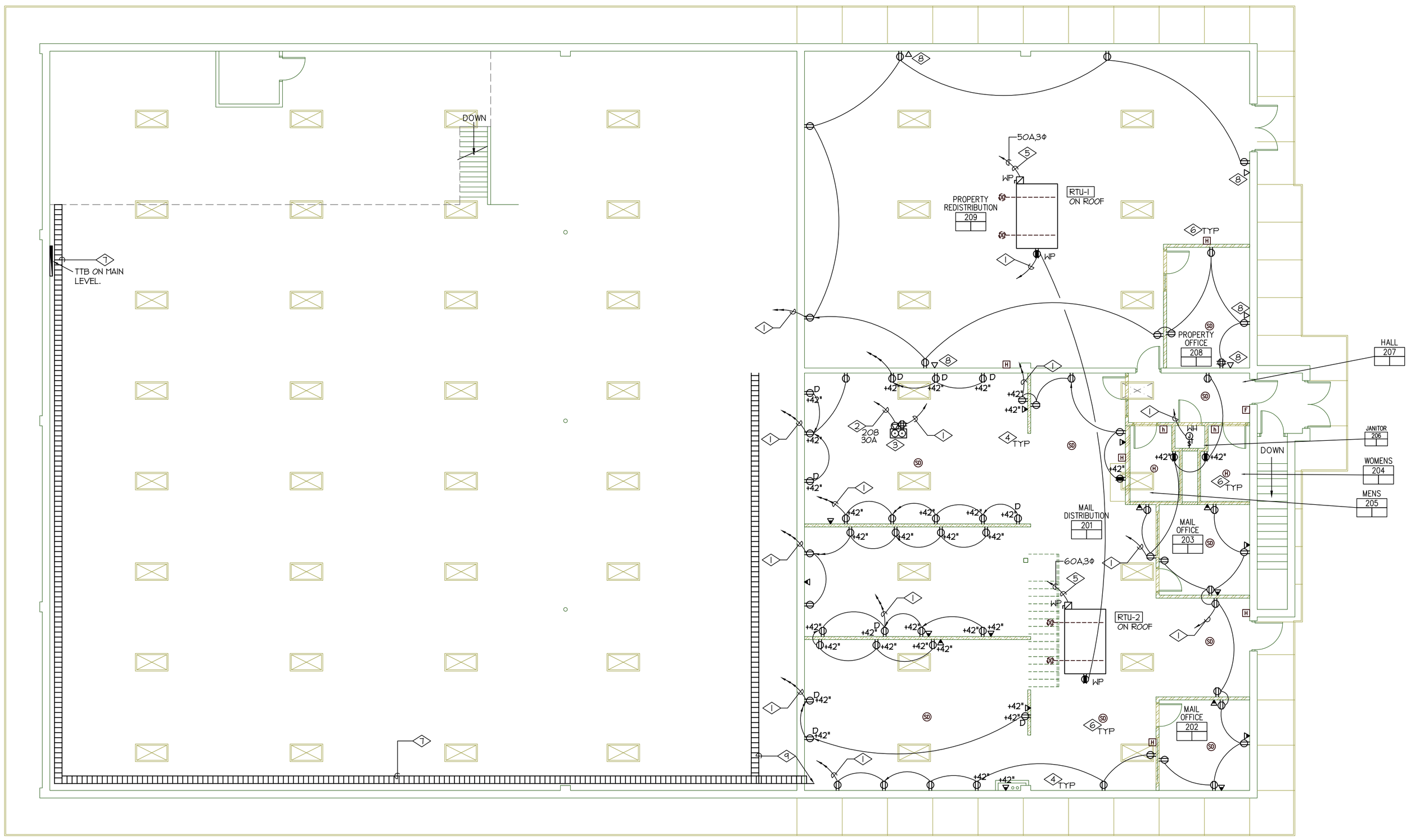

N

UPPER FLOOR PLAN – ELECTRICAL

SCALE: 1/8" = 1'-0"

REFERENCE NOTES:

1. TIE EACH HOME RUN TO THE NEAREST 120 VOLT 20 AMP DEDICATED CIRCUIT IN THE NEAREST PANEL WITH AVAILABLE CAPACITY. PROVIDE CONDUITS, CONDUCTORS, CIRCUIT BREAKERS, ETC, FOR A COMPLETE INSTALLATION. FIELD VERIFY.
2. TIE TO A 208 VOLT, 30 AMP CIRCUIT BREAKER IN THE NEAREST PANEL WITH AVAILABLE CAPACITY. PROVIDE CONDUITS CONDUCTORS, CIRCUIT BREAKERS, ETC, FOR A COMPLETE INSTALLATION.
3. FURNISH AND INSTALL FLOOR OUTLETS (ONE 208 VOLT AND ONE 120 VOLT) IN THE APPROXIMATE LOCATION SHOWN. TIE THE FLOOR OUTLETS TO THE INDICATED CIRCUIT. PROVIDE METAL COVER PLATE. COORDINATE WITH THE GENERAL CONTRACTOR FOR EXACT LOCATION.
4. FURNISH AND INSTALL A 4"X4"X2 1/8" J-BOX IN THE APPROXIMATE LOCATION SHOWN. FOR VOICE/DATA. RUN A 1" CONDUIT WITH PULL STRING FROM THE J-BOX TO THE CABLE TRAY. COORDINATE WITH THE OWNER FOR LOCATION PRIOR TO ROUGH IN. MINIMIZE THE LENGTH OF THE CONDUIT TO THE CABLE TRAY SO THAT THE MAXIMUM CABLE DISTANCE DOES NOT EXCEED 210'.
5. FURNISH AND INSTALL A 50 AMP AND A 60 AMP 3 POLE CIRCUIT BREAKERS IN THE EXISTING PANEL "A" (400 AMP, 3 PHASE PANEL). TIE EACH ROOF TOP UNIT (RTU-1 AND RTU-2) TO THE CORRESPONDING CIRCUIT BREAKERS. MAKE ANY MODIFICATIONS NECESSARY TO INSTALL THE TWO BREAKERS IN THE EXISTING PANEL. THE NEW CIRCUIT BREAKERS SHALL HAVE THE SAME AIC RATING AS THE REST OF THE BREAKERS IN THE PANEL. FIELD VERIFY.
6. FURNISH AND INSTALL NEW FIRE ALARM DEVICES IN THE APPROXIMATE LOCATION SHOWN. THE NEW DEVICES SHALL BE THE SAME/COMPATIBLE WITH THE EXISTING FIRE ALARM SYSTEM (NOTIFIER). TIE THE NEW DEVICES TO THE EXISTING FIRE ALARM CONTROL PANEL. UTILIZE A CLASS "A" LOOP. PROVIDE ADDITIONAL SOFTWARE, HARDWARE, BATTERIES, ETC., FOR A COMPLETE WORKING INSTALLATION. TEST AND CERTIFY THE SYSTEM TO MEET AHJ'S REQUIREMENTS AFTER THE DEVICES ARE INSTALLED. FIELD VERIFY.
7. FURNISH AND INSTALL LADDER TYPE ALUMINUM CABLE TRAY. WALL MOUNTED WITH 6" RUNG SPACING 4" HEIGHT B-LINE CAT.# A-06-12-B494-12. SUPPORT THE CABLE TRAY AS PER MANUFACTURE RECOMMENDATION. PROVIDE BONDING JUMPERS AT ALL THE JOINTS AND GROUND THE TRAY TO GROUND BUS BAR IN MAIN ELECTRICAL PANEL. COORDINATE WITH GENERAL AND MECHANICAL CONTRACTOR FOR EXACT ROUTING OF CABLE TRAY.
8. FURNISH AND INSTALL 4"X4"X2 1/8" J-BOX IN THE APPROXIMATE LOCATIONS SHOWN FOR VOICE/DATA. RUN 1" CONDUIT WITH PULL STRINGS FROM THE J-BOX TO THE TTB. COORDINATE WITH THE OWNER PRIOR TO ROUGH-IN.
9. CABLE TRAY TO BE INSTALLED ON THE CEILING OF THE FIRST LEVEL. MAINTAIN A MINIMUM OF 4" CLEARANCE FROM THE CEILING TO THE TOP OF THE CABLE TRAY. COORDINATE WITH THE UNIVERSITY FOR THE EXACT HEIGHT AND ROUTE OF THE CABLE TRAY PRIOR TO ROUGH IN.

HFSArchitects

ARCHITECTURE
INTERIORS
PLANNING

1484 South State Street
Salt Lake City, Utah 84115
801-596-0691/F: 596-0693
www.hfsa.com

CONSULTANT

E. C. E. INC., CONSULTING ENGINEERS
939 SO. WEST TEMPLE SLC, UTAH 84101
PHONE (801) 521-8007 FAX: (801) 521-8057

LICENSED PROFESSIONAL ENGINEER NO. 334543-2202 MANSOUR AGHDASI STATE OF UTAH

STORES & RECEIVING BUILDING EXPANSION/RENOVATION

Weber State University
Ogden, Utah

MARK	DATE	DESCRIPTION
	02-27-06	100% REVIEW SET
	03-14-06	CONSTRUCTION DOCUMENT

DATE: 03-14-06
AGENCY PROJECT NO:
HFSA PROJECT NO:
CAD DWG FILE NO: 3104
DRAWN BY: JB
CHECKED BY: MA
DESIGNED BY:
DWG TYPE:
ARCHITECTURAL PHASE:

SHEET TITLE

UPPER FLOOR PLAN–ELECTRICAL

E2.02

3104

REFERENCE NOTES:

1. LIGHT FIXTURES INDICATED WITH A LETTER "E" (EMERGENCY) SHALL BE PROVIDED WITH A 90 MINUTE BATTERY PACK WITH 1100 LUMENS ON ONE LAMP. ONE LAMP SHALL TURN ON WHEN COMMERCIAL POWER FAILS, REGARDLESS OF THE POSITION OF CONTROL SWITCH. ALL LAMPS IN THE LIGHT FIXTURE SHALL BE CONTROLLED WITH THE INDICATED LIGHT SWITCH. PROVIDE UNSWITCHED LIGHTING CIRCUIT TO THE BATTERY PACK. PROVIDE CONDUIT, CONDUCTORS, RELAY (ONE PER EMERGENCY FIXTURE) ETC., FOR A COMPLETE INSTALLATION.
2. TIE EXIT SIGNS TO THE NEAREST UNSWITCHED EMERGENCY LIGHTING CIRCUIT. PROVIDE CONDUITS, CONDUCTORS, ETC., FOR A COMPLETE INSTALLATION.
3. LIGHT FIXTURES INDICATED WITH A LOWER CASE LETTER SHALL BE TIED TO THE CORRESPONDING LIGHT SWITCHES. PROVIDE CONDUIT, CONDUCTORS, ETC., AS REQUIRED TO ACCOMMODATE SWITCHING.
4. ONE LAMP IN LIGHT FIXTURES INDICATED WITH "NL" (NIGHT LIGHT) SHALL STAY 'ON' AT ALL TIMES. PROVIDE CONDUITS, CONDUCTORS, ETC., FOR A COMPLETE INSTALLATION.
5. TIE EACH HOME RUN TO THE NEAREST 120 VOLT 20 AMP DEDICATED CIRCUIT IN THE NEAREST PANEL WITH AVAILABLE CAPACITY. PROVIDE CONDUITS, CONDUCTORS, CIRCUIT BREAKERS, ECT, FOR A COMPLETE INSTALLATION. FIELD VERIFY.

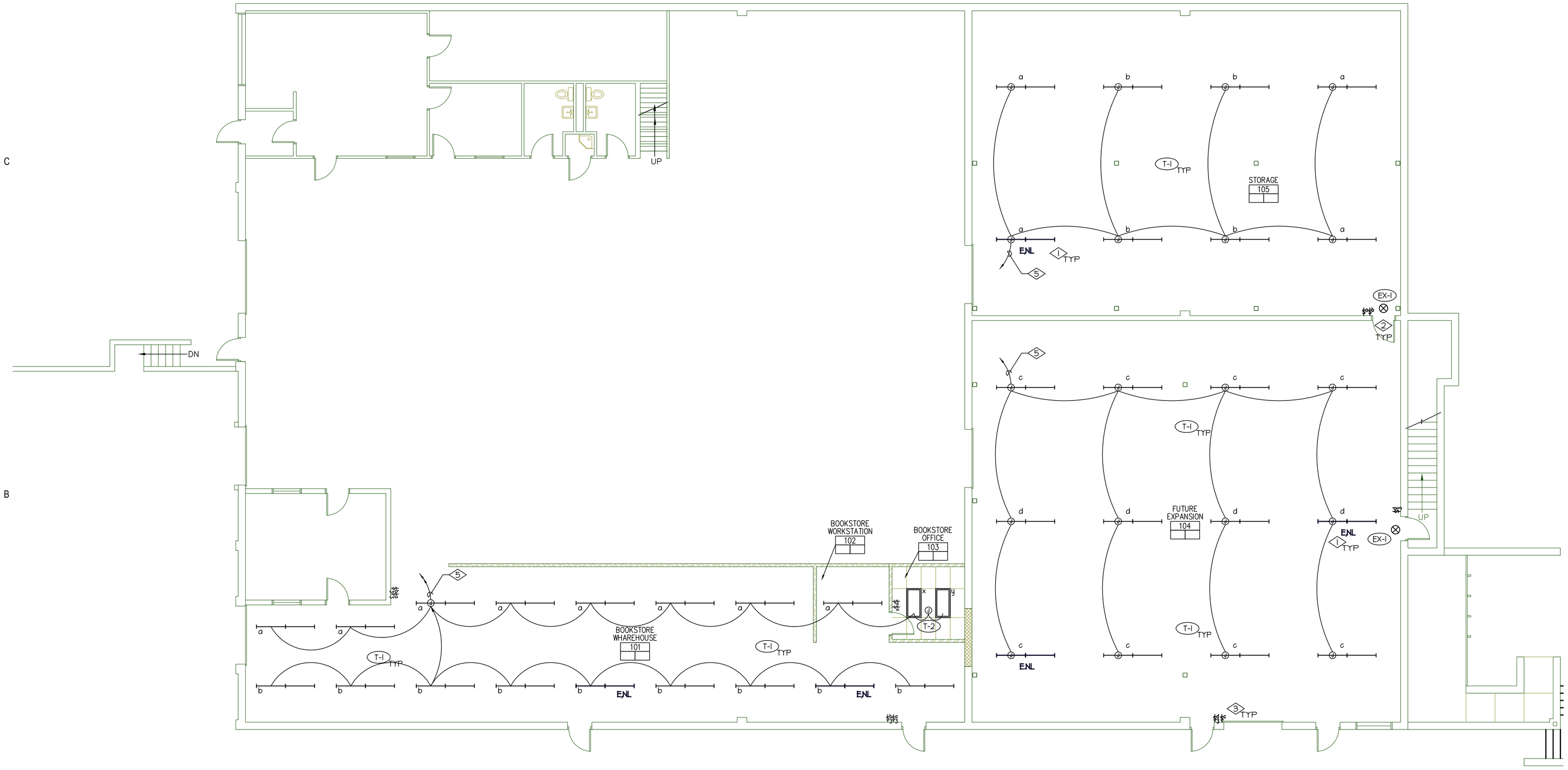

N

MAIN FLOOR PLAN – LIGHTING

SCALE: 1/8" = 1'-0"

HFSArchitects

ARCHITECTURE
INTERIORS
PLANNING

1484 South State Street
Salt Lake City, Utah 84115
801-596-0691/F: 596-0693
www.hfsa.com

CONSULTANT

E. C. E. INC., CONSULTING ENGINEERS
939 SO. WEST TEMPLE
SLC, UTAH 84101
PHONE (801) 521-8007
FAX (801) 521-8057

LICENSED PROFESSIONAL ENGINEER
NO. 334543-2202
MANSOUR AGHDASI
STATE OF UTAH

STORES & RECEIVING BUILDING EXPANSION/RENOVATION

Weber State University
Ogden, Utah

MARK	DATE	DESCRIPTION
	02-27-06	100% REVIEW SET
	03-14-06	CONSTRUCTION DOCUMENT

DATE: 03-14-06
AGENCY PROJECT NO:
HFSA PROJECT NO:
CAD DWG FILE NO: 3104
DRAWN BY: JB
CHECKED BY: MA
DESIGNED BY:
DWG TYPE:
ARCHITECTURAL PHASE:

SHEET TITLE

MAIN FLOOR PLAN–LIGHTING

E9.01

SHEET 30 OF 31

3104

REFERENCE NOTES:

1. LIGHT FIXTURES INDICATED WITH A LETTER "E" (EMERGENCY) SHALL BE PROVIDED WITH A 90 MINUTE BATTERY PACK WITH 1100 LUMENS ON ONE LAMP. ONE LAMP SHALL TURN ON WHEN COMMERCIAL POWER FAILS, REGARDLESS OF THE POSITION OF CONTROL SWITCH. ALL LAMPS IN THE LIGHT FIXTURE SHALL BE CONTROLLED WITH THE INDICATED LIGHT SWITCH. PROVIDE UNSWITCHED LIGHTING CIRCUIT TO THE BATTERY PACK. PROVIDE CONDUIT, CONDUCTORS, RELAY (ONE PER EMERGENCY FIXTURE) ETC., FOR A COMPLETE INSTALLATION.
2. TIE EXIT SIGNS TO THE NEAREST UNSWITCHED EMERGENCY LIGHTING CIRCUIT. PROVIDE CONDUITS, CONDUCTORS, ETC., FOR A COMPLETE INSTALLATION.
3. LIGHT FIXTURES INDICATED WITH A LOWER CASE LETTER SHALL BE TIED TO THE CORRESPONDING LIGHT SWITCHES. PROVIDE CONDUIT, CONDUCTORS, ETC., AS REQUIRED TO ACCOMMODATE SWITCHING.
4. ONE LAMP IN LIGHT FIXTURES INDICATED WITH "NL" (NIGHT LIGHT) SHALL STAY 'ON' AT ALL TIMES. PROVIDE CONDUITS, CONDUCTORS, ETC., FOR A COMPLETE INSTALLATION.
5. TIE EACH HOME RUN TO THE NEAREST 120 VOLT 20 AMP DEDICATED CIRCUIT IN THE NEAREST PANEL WITH AVAILABLE CAPACITY. PROVIDE CONDUITS, CONDUCTORS, CIRCUIT BREAKERS, ECT, FOR A COMPLETE INSTALLATION. FIELD VERIFY.

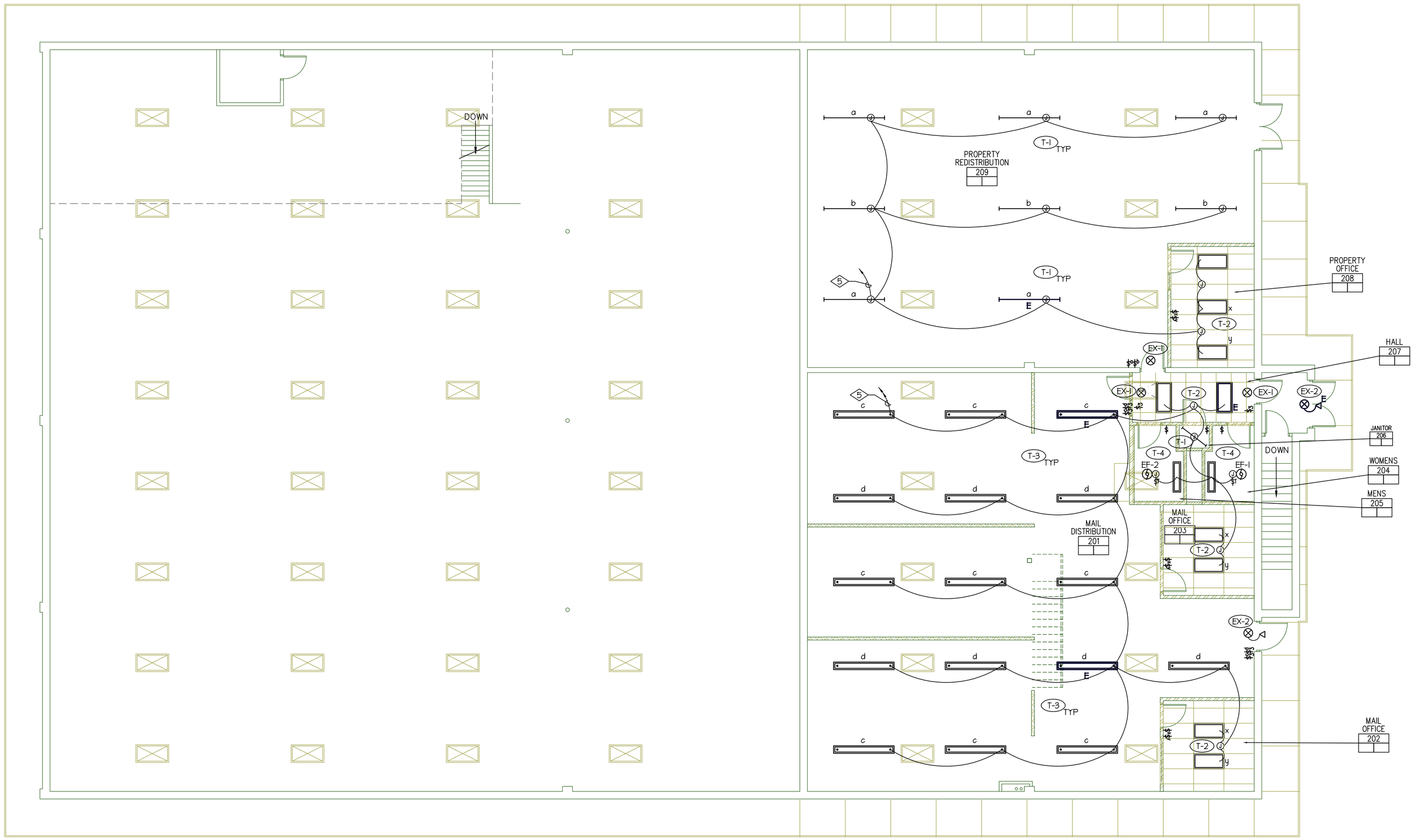

N

UPPER FLOOR PLAN – LIGHTING

SCALE: 1/8" = 1'-0"

HFSArchitects

ARCHITECTURE
INTERIORS
PLANNING

1484 South State Street
Salt Lake City, Utah 84115
801-596-0691/F: 596-0693
www.hfsa.com

CONSULTANT

E. C. E. INC., CONSULTING ENGINEERS
939 SO. WEST TEMPLE SLC, UTAH 84101
PHONE (801) 521-8007 FAX: (801) 521-8057

LICENSED PROFESSIONAL ENGINEER NO. 334543-2202 MANSOUR AGHDASI STATE OF UTAH

STORES & RECEIVING BUILDING EXPANSION/RENOVATION

Weber State University
Ogden, Utah

MARK	DATE	DESCRIPTION
	02-27-06	100% REVIEW SET
	03-14-06	CONSTRUCTION DOCUMENT

DATE: 03-14-06
AGENCY PROJECT NO:
HFSA PROJECT NO:
CAD DWG FILE NO: 3104
DRAWN BY: JB
CHECKED BY: MA
DESIGNED BY:
DWG TYPE:
ARCHITECTURAL PHASE:

SHEET TITLE

UPPER FLOOR PLAN LIGHTING

E9.02

SHEET 31 OF 31

3104