# KITCHEN & BATH REMODELS TO:

# QUAILRUN & OAKRIDGE BUILDINGS

## UTAH STATE DEVELOPMENT CENTER

## AMERICAN FORK, UTAH


VINCENT DESIGN GROUP INC.

401 EAST 1700 SOUTH
SALT LAKE CITY, UTAH
(801) 484-2046

architects/planners


## LEGEND & SYMBOLS

| | | | |
|---|---|---|---|
| ACOUST. | ACOUSTIC | SPEC. | SPECIFICATION |
| ADJ. | ADJUSTABLE | STL. | STEEL |
| ALUM. | ALUMINUM | TJI. | TRUSS JOIST |
| CER.TILE | CERAMIC TILE | REQ. | REQUIRED |
| CONC. | CONCRETE | W.C. | WATER CLOSET |
| CONT. | CONTINUOUS | U.N.O. | UNLESS NOTED OTHERWISE |
| DET. | DETAIL | | |
| ELEV. | ELEVATION | | |
| EXIST/EX. | EXISTING | | |
| EXP. | EXPANSION | | |
| FLR. | FLOOR | P/L | PROPERTY LINE |
| F.D. | FLOOR DRAIN | FGE. | FINISH GRADE ELEVATION |
| GALV. | GALVANIZED | TBC. | TOP OF CURB ELEVATION |
| GA. | GUAGE | TCE. | TOP OF CONCRETE ELEVATION |
| GYP. BD. | GYPSUM BOARD | FFE. | FINISH FLOOR ELEVATION |
| INSUL. | INSULATION | —G— | GAS LINE |
| MAX. | MAXIMUM | —SS— | SANITARY SEWER LINE |
| MM | MINIMUM | —W— | WATER LINE |
| MTL. | METAL | —T— | TELEPHONE LINE |
| N. I. C. | NOT IN CONTRACT | —P— | POWER LINE |
| OPN'G | OPENING | | |
| REINF. | REINFORCED | | |
| SHT. | SHEET | | |
| O.C. | ON CENTER | | |

WOOD FRAMED WALLS
CONCRETE
ACOUSTIC TILE
GYPSUM BOARD
BRICK VENEER
RIGID INSULATION
WOOD DIMENSIONAL LUMBER
WOOD

WINDOW NUMBERS
DOOR NUMBERS
DETAIL NUMBER / SHEET NUMBER — DETAIL
SECTION LETTER / SHEET NUMBER — SECTION OR ELEVATION

1

## DRAWING INDEX :


| NUMBER | TITLE |
|---|---|
| GI-000 | TITLE SHEET, LEGEND & DRAWING INDEX |
| AE-101 | BUILDINGS FLOOR PLAN |
| AE-102 | KITCHEN PLAN, ELEVATIONS DETAILS & SPEC. NOTES |


APPROVALS:

Prime Agency — Date

DFCM — Date

APPROVAL DOES NOT RELIEVE A/E OF DESIGN LIABILITY

VINCENT DESIGN GROUP
architects/planners
401 EAST 1700 SOUTH
SALT LAKE CITY, UTAH
(801) 484-2046

CONSULTANTS

KITCHEN & BATH MILLWORK REMODEL TO
QUAILRUN, OAKRIDGE USDC
AMERICAN FORK, UTAH
UTAH STATE DEVELOPMENT CENTER
DFCM PROJECT NO. 05201410

| MARK | DATE | DESCRIPTION |
|---|---|---|
| 1 | 2/06 | WORKING DRWGS. |
| 3 | 4/06 | BID DOCUMENTS |
| | | BID DOCUMENTS UPDATE |

PROJECT NO:
ARCH. PROJECT NO: 05-65
CAD DWG FILE:
DRAWN BY: JV
CHECKED BY:
DESIGNED BY:
COPYRIGHT:

SHEET TITLE
GI-000

ARCHITECTURAL

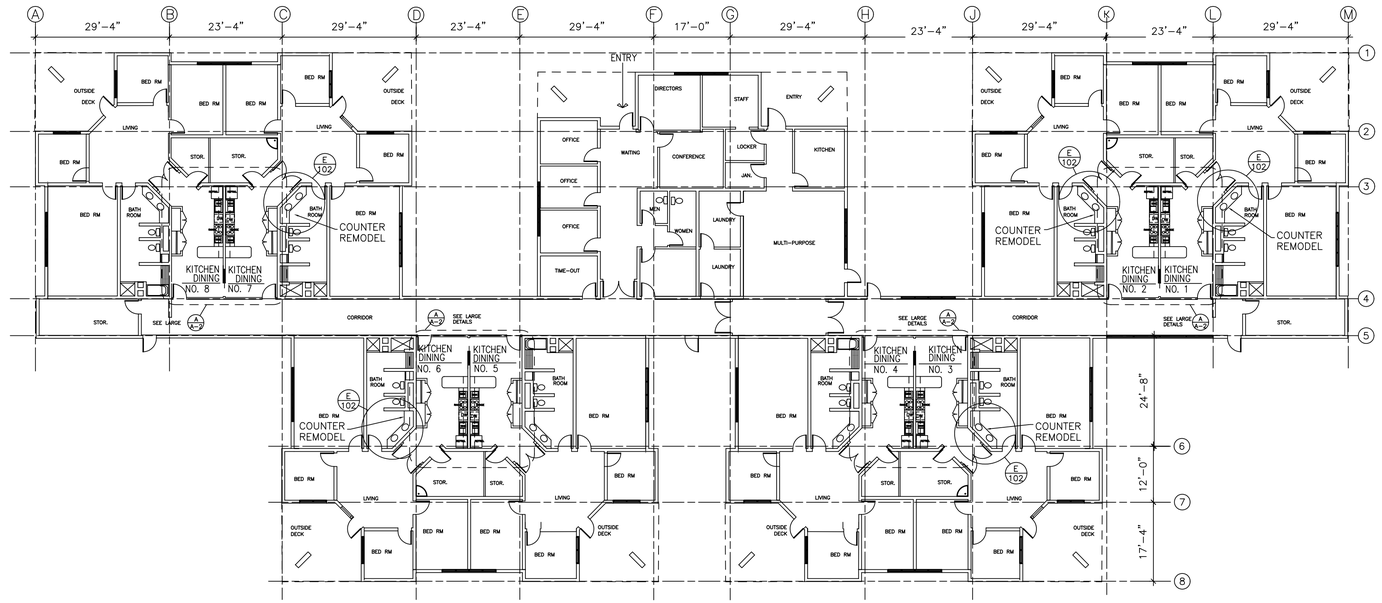


OAKRIDGE BUILDING

# BUILDING FLOOR PLAN

SCALE: 1/16"=1'-0"

NORTH

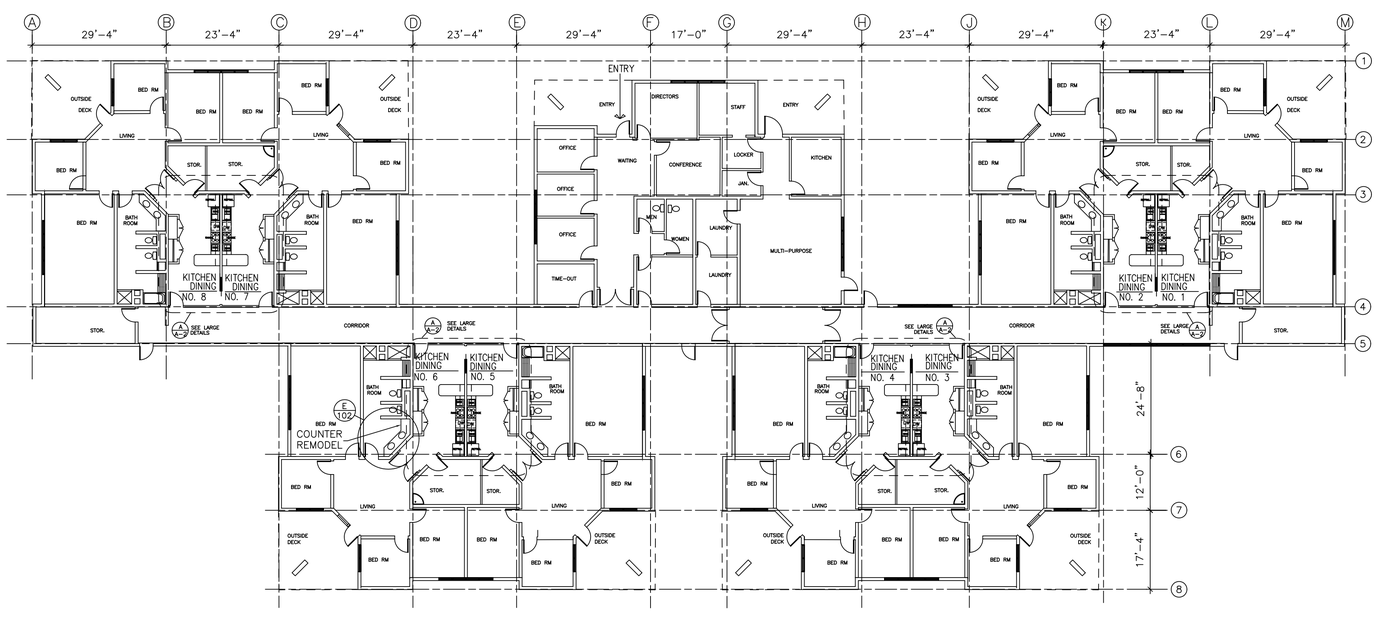


QUAILRUN BUILDING

# BUILDING FLOOR PLAN

SCALE: 1/8"=1'-0"

NORTH

VINCENT DESIGN GROUP

architects/planners

401 EAST 1700 SOUTH
SALT LAKE CITY, UTAH
(801) 484-2046

CONSULTANTS

KITCHEN & BATH MILLWORK REMODEL TO

QUAILRUN, OAKRIDGE USDC
AMERICAN FORK, UTAH

UTAH STATE DEVELOPMENT CENTER
DFCM PROJECT NO. 05201410

| MARK | DATE | DESCRIPTION |
|---|---|---|
| 1 | 2/06 | WORKING DRWGS. |
| 3 | 4/06 | BID DOCUMENTS |
| | | BID DOCUMENTS UPDATE |

PROJECT NO: P.O.
ARCH. PROJECT NO: 05-65
CAD DWG FILE:
DRAWN BY: JV
CHECKED BY:
DESIGNED BY:
COPYRIGHT:

SHEET TITLE

AE-101

ARCHITECTURAL

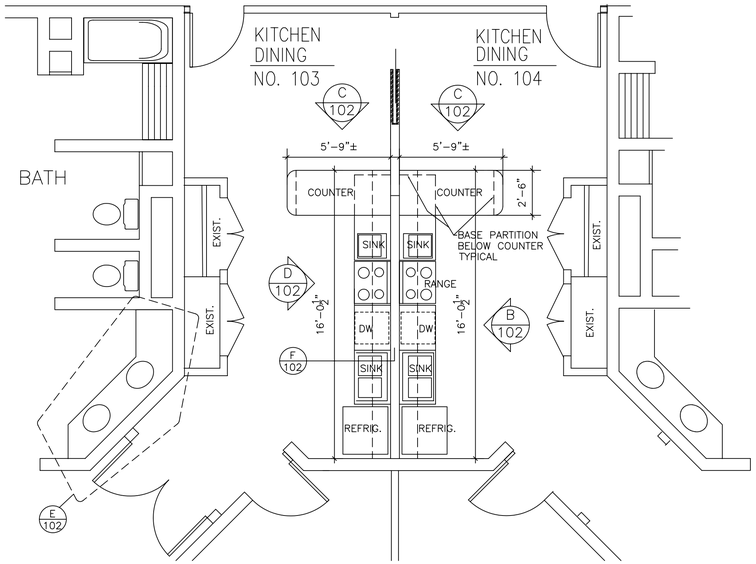


## TYPICAL KITCHEN PLAN (A / A-2)

SCALE: 1/4"=1'-0"

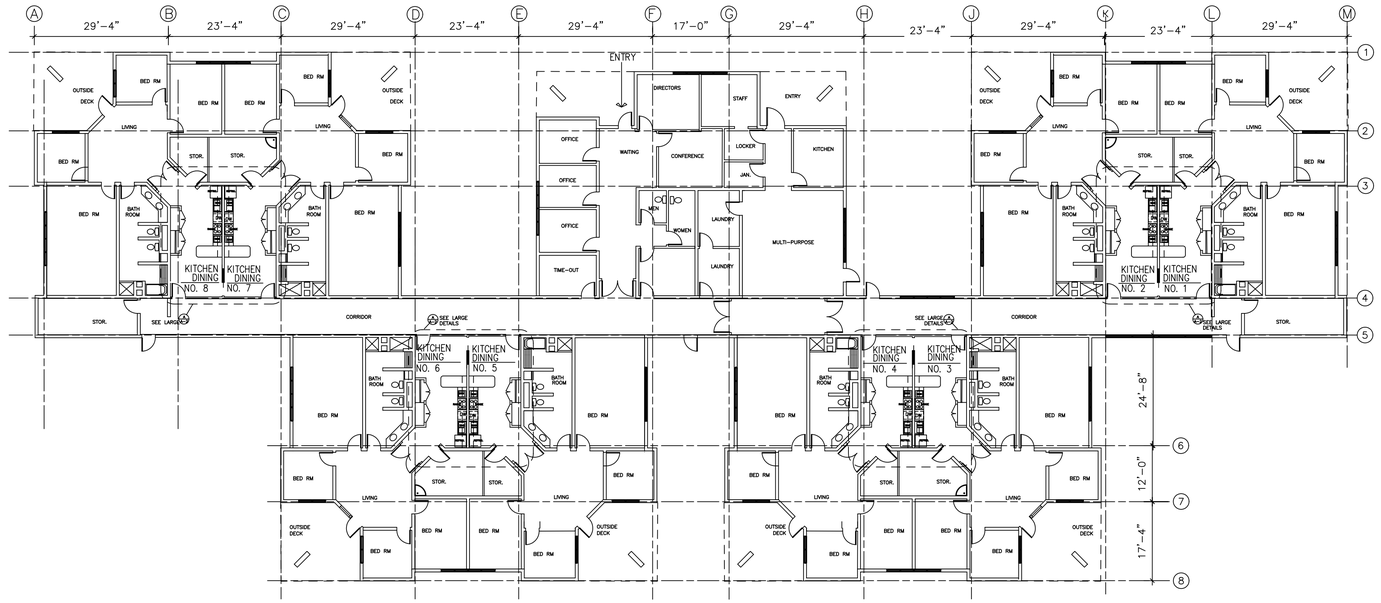


## BUILDING PLAN

SCALE: 1/16"=1'-0"

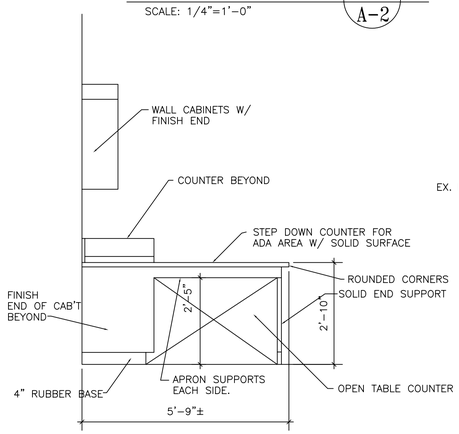


## ELEVATION (C / 102)

SCALE: 1/2"=1'-0"

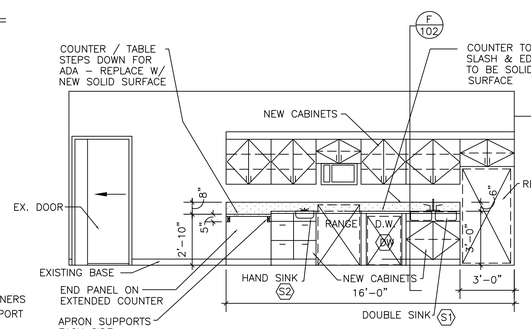


## ELEVATION (D / 102)

SCALE: 1/4"=1'-0"

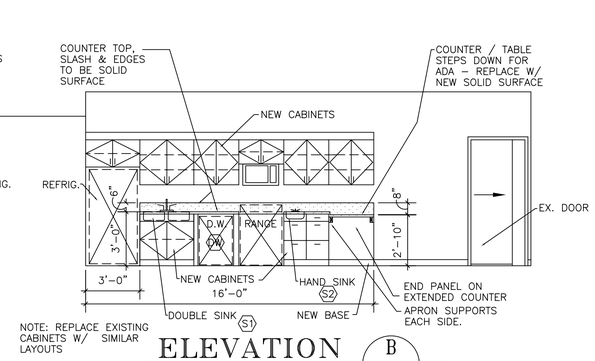


## ELEVATION (B / 102)

SCALE: 1/4"=1'-0"

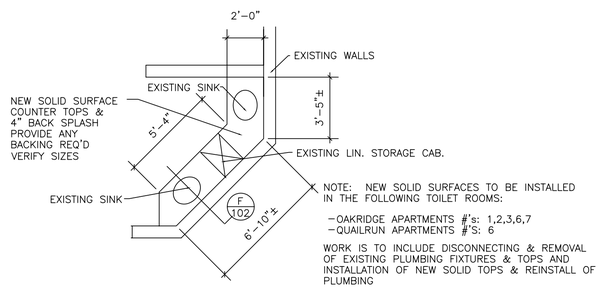


## BATH VANITY (E / 102)

SCALE: 1/4"=1'-0"

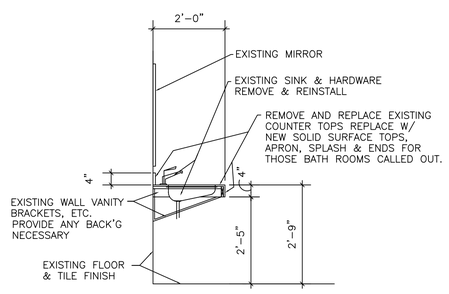


## ELEVATION (F / 102)

SCALE: 1/2"=1'-0"

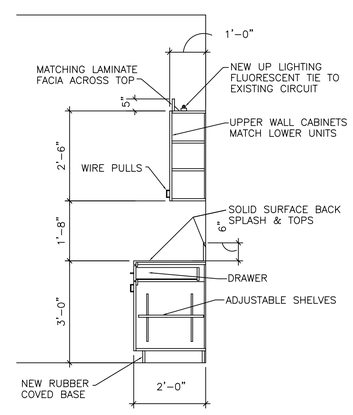


## DETAIL (G / A-2)

SCALE: 1/2"=1'-0"

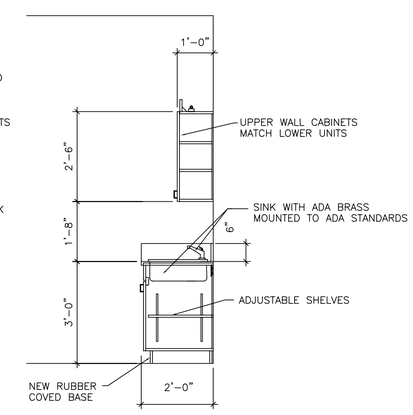


## DETAIL (H / A-2)

SCALE: 1/2"=1'-0"

## CONSTRUCTION NOTES

1. REMOVE EXISTING KITCHEN COUNTERS, DISCONNECT POWER & PLUMBING (OUTLETS & SINKS, ETC.) NOTE THAT EXIST. FIXTURES ARE TO BE RECONNECTED BACK TO EXISTING AFTER INSTALLATION.
2. SEE SPECIFICATION FOR WORK RELATED INFORMATION.
3. ALL WORK IS TO MEET STATE AND LOCAL CODES IBC 2003, ETC.
4. COORDINATE WORK SO THAT ONLY TWO KITCHENS ARE EFFECTED AT ONE TIME.
5. PROVIDE ANY BACKING, SUPPORTS NECESSARY FOR NEW COUNTERS.
6. SEE SPECIFICATIONS FOR FOR PLUMBING, ELECTRICAL, ETC.. REQUIREMENTS & FIXTURES. NOTE WORK IS TO COMPLY W/ ADA.
7. NEW COUNTER TOPS, BACK SPLASH & EDGES TO BE SOLID SURFACE MATERIAL : STILE STONE', 'HAN STONE" OR APPROVED EQUAL.
8. CABINET WORK TO BE LAMINATE FINISH WITH 1/8" SOLID EDGES, W/ HINGES, WIRE PULLS, SOLID 1/2" 'CORIAN' TOPS & SPLASH. MATCH EXISTING.
9. TOUCH UP PAINTED WHERE NECESSARY FROM REMODEL.
10. NOTE: NEW DOUBLE SINKS ARE TO NEW W/ NEW FAUCETS. RECONNECT TO EXISTING SUPPLY & WASTE, SEE SPEC. BELOW

## LEGEND

1. PLUMBING FIXTURES: TIE BACK INTO EXISTING PLUMBING AS REQUIRED.

DW — DISHWASHER: EXISTING (DISCONNECT & REINSTALL)

S1 — TRIPLE COMPARTMENT SINK:'ELKAY' ST. STL. #ELU 3118, UNDER COUNTER MOUNT W/ CHICAGO FAUCET #1100CY & #317 HANDLES, STRAINER, ETC.. CONNECT TO EXISTING WATER & WASTE.

S2 — HAND SINK: 'ELKAY' #ELU 1418 – UNDER COUNTER MOUNT ST. STL. W/ CHICAGO FAUCET #1100 CY & #317 HANDLES, P– TRAPS, STRAINER, ETC. RECONNECT TO EXISTING WATER & WASTE.

NOTES:

1. REPLACE ALL TRAPS CONNECTING PIPING, AND PROVIDE INSUL. ON ADA EXPOSED PIPING.
2. ELECTRICAL APPLIANCES ARE EXISTING, CONNECTION BY THIS CONTRACTOR, VERIFY UNITS REQUIREMENTS.
3. ALL WORK IS TO MEET OR EXCEED LOCAL AND STATE CODE STANDARDS
4. COORDINATE WORK WITH OWNER SCHEDULE.


VINCENT DESIGN GROUP
architects/planners
401 EAST 1700 SOUTH
SALT LAKE CITY, UTAH
(801) 484–2046


CONSULTANTS

KITCHEN & BATH MILLWORK REMODEL TO
# QUAILRUN, OAKRIDGE USDC AMERICAN FORK, UTAH
UTAH STATE DEVELOPMENT CENTER
DFCM PROJECT NO. 05201410

| MARK | DATE | DESCRIPTION |
|---|---|---|
| 1 | 2/06 | WORKING DRWGS. |
| 3 | 4/06 | BID DOCUMENTS |
| | | BID DOCUMENTS UPDATE |

| | |
|---|---|
| PROJECT NO: | |
| ARCH. PROJECT NO: | 05–65 |
| CAD DWG FILE: | |
| DRAWN BY: | JV |
| CHECKED BY: | |
| DESIGNED BY: | |
| COPYRIGHT: | |

SHEET TITLE

AE–102

ARCHITECTURAL