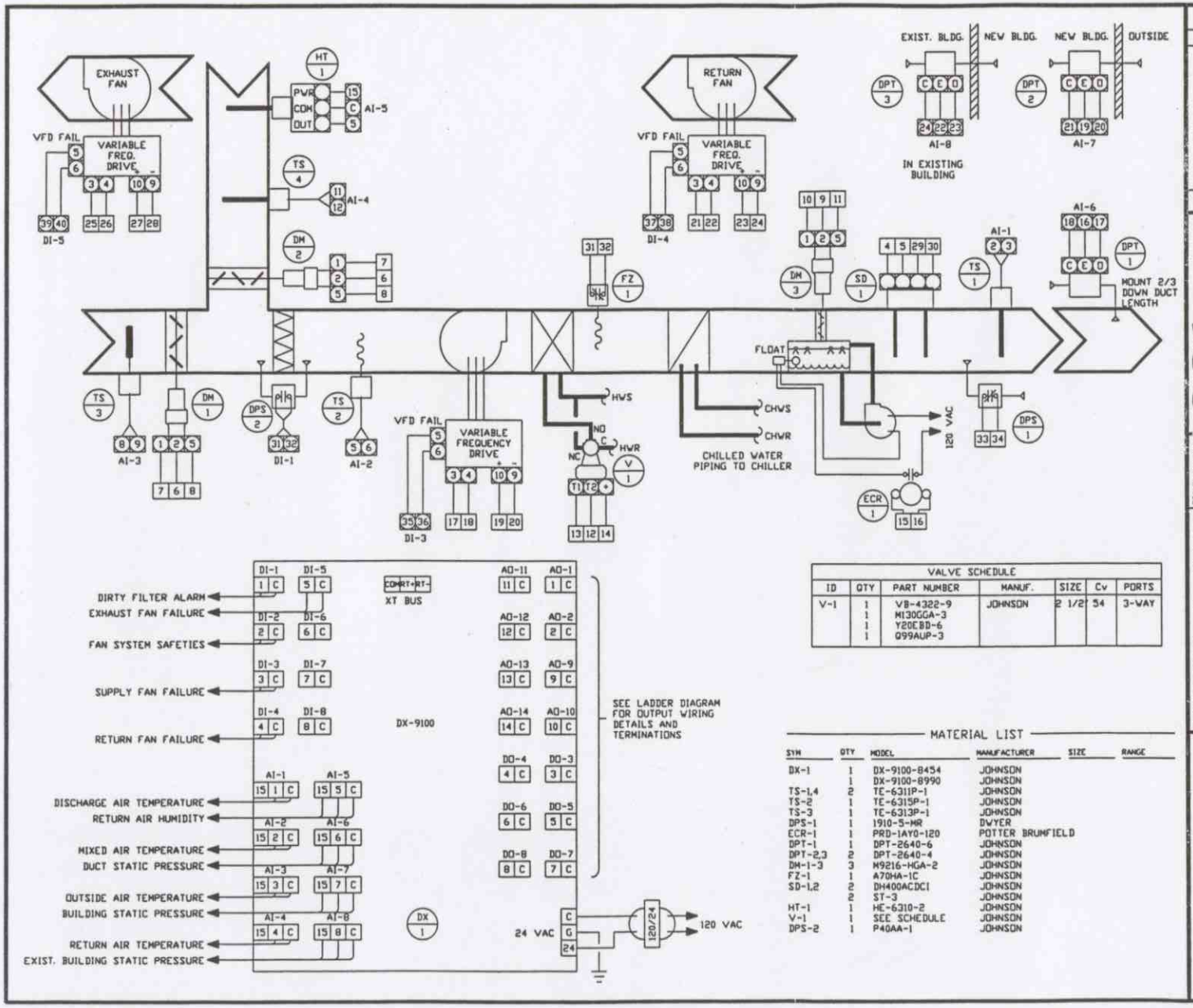

VALVE SCHEDULE

ID	QTY	PART NUMBER	MANUF.	SIZE	Cv	PORTS
V-1	1 1 1 1	VB-4322-9 M130GGA-3 Y20EBD-6 Q99AUP-3	JOHNSON	2 1/2"	54	3-WAY

MATERIAL LIST

SYM	QTY	MODEL	MANUFACTURER	SIZE	RANGE
DX-1	1	DX-9100-8454	JOHNSON		
	1	DX-9100-8990	JOHNSON		
TS-1,4	2	TE-6311P-1	JOHNSON		
TS-2	1	TE-6315P-1	JOHNSON		
TS-3	1	TE-6313P-1	JOHNSON		
DPS-1	1	1910-5-MR	DWYER		
ECR-1	1	PRD-1AY0-120	POTTER BRUMFIELD		
DPT-1	1	DPT-2640-6	JOHNSON		
DPT-2,3	2	DPT-2640-4	JOHNSON		
DM-1-3	3	M9216-HGA-2	JOHNSON		
FZ-1	1	A70HA-1C	JOHNSON		
SD-1,2	2	DH400ACDCI	JOHNSON		
	2	ST-3	JOHNSON		
HT-1	1	HE-6310-2	JOHNSON		
V-1	1	SEE SCHEDULE	JOHNSON		
DPS-2	1	P40AA-1	JOHNSON		

REV	DESCRIPTION OF CHANGE	BY	DATE
1	AS BUILT CHANGES		10/08/97

Precision Control Service Inc.

DRAWING 1 OF 10 DRAWN BY: DEP

SYSTEM VAV AIR HANDLER #1

BLDG. DEPT. OF HUMAN SERV.

SITE BLANDING, UTAH

ARCH:

ENGR.: COLVIN ENGINEERING

CONTR.: WESTERN STATES

JOB NO.: C9601 04/15/96

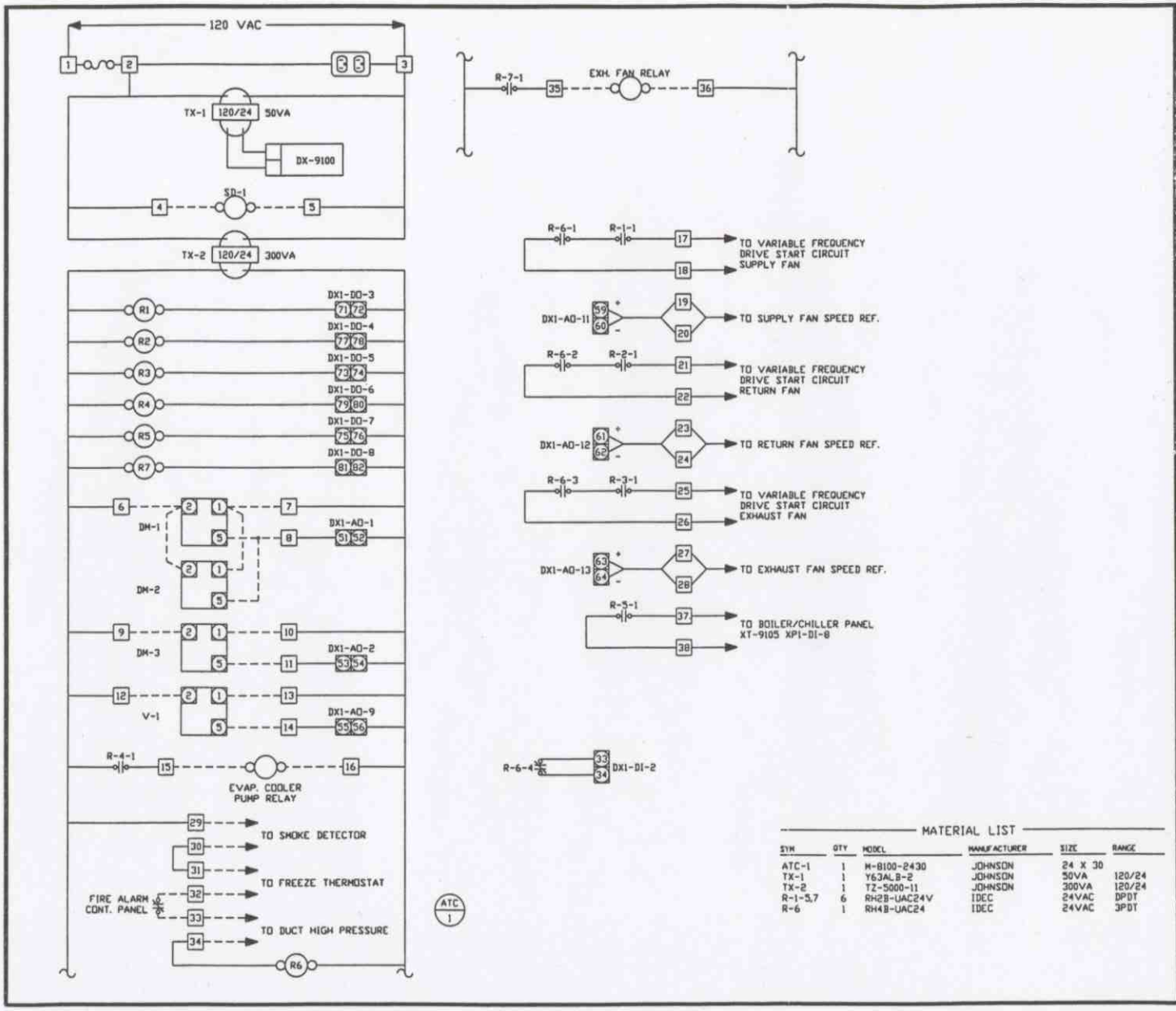

MATERIAL LIST

SYM	QTY	MODEL	MANUFACTURER	SIZE	RANGE
ATC-1	1	M-8100-2430	JOHNSON	24 X 30	
TX-1	1	Y63ALB-2	JOHNSON	50VA	120/24
TX-2	1	TZ-5000-11	JOHNSON	300VA	120/24
R-1-5,7	6	RH2B-UAC24V	IDEC	24VAC	DPDT
R-6	1	RH4B-UAC24	IDEC	24VAC	3PDT

REV	DESCRIPTION OF CHANGE	BY	DATE
1	AS BUILT CHANGES	DEP	08/97

Precision Control Service Inc.

DRAWING 2 OF 10 DRAWN BY: DEP

SYSTEM AHU-1 LADDER DIAGRAM

BLDG. DEPT. OF HUMAN SERV.

SITE BLANDING, UTAH

ARCH.:

ENGR.: COLVIN ENGINEERING

CONTR.: WESTERN STATES

JOB NO.: C9601 04/15/96

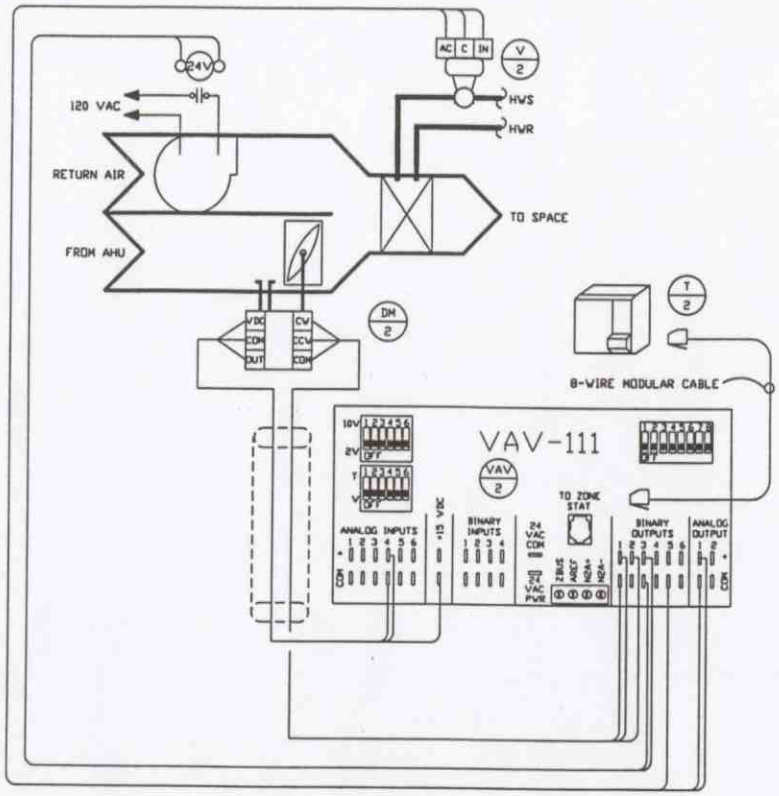

FAN POWERED VAV BOXES

TYP. OF 39

VAV BOX VALVE SCHEDULE					QUANTITY	
BOX ID	PART NUMBER	SIZE	Cv	MANUFACTURE	2-WAY	3-WAY
C	VTM-T?007-200	1/2"	0.7	JOHNSON	12	1
C-1	VTM-T?007-200	1/2"	0.7	JOHNSON	0	0
D	VTM-T?007-200	1/2"	0.7	JOHNSON	11	2
E	VTM-T?007-200	1/2"	0.7	JOHNSON	9	0
F	VTM-T?007-200	1/2"	0.7	JOHNSON	2	0
G	VTM-T?007-200	1/2"	0.7	JOHNSON	1	0
H	VTM-T?007-200	1/2"	0.7	JOHNSON	0	0
I	VTM-T?019-200	1/2"	1.9	JOHNSON	1	0
J	VTM-T?019-200	1/2"	1.9	JOHNSON	0	0
	?= "M" FOR 3-WAY					
	?= "N" FOR 2-WAY					

BOX ID	ROOM #	PORTING	SENSOR #
C	109	2-WAY	TE-6411W-1100
	127	2-WAY	TE-6411W-1100
	139	2-WAY	TE-6411W-1100
	140	2-WAY	TE-6411W-1100
	141 INT	3-WAY	TE-6411W-1100
	148	2-WAY	TE-6411W-1100
	215	2-WAY	TE-6411W-1100
	217	2-WAY	TE-6411W-1100
	218	2-WAY	TE-6411W-1100
	236	2-WAY	TE-6411W-1100
	242	2-WAY	TE-6411W-1100
	252	2-WAY	TE-6411W-1100
	263	2-WAY	TE-6411W-1100
D	111	2-WAY	TE-6411W-1100
	119	3-WAY	TE-6411W-1100
	120	2-WAY	TE-6411W-1100
	149	2-WAY	TE-6411W-1100
	208	3-WAY	TE-6411W-1100
	210	2-WAY	TE-6411W-1100
	223	2-WAY	TE-6411W-1100
	229	2-WAY	TE-6411W-1100
	232	2-WAY	TE-6411W-1100
	243	2-WAY	TE-6411W-1100
	253	2-WAY	TE-6411W-1100
	266	2-WAY	TE-6411W-1100
	268	2-WAY	TE-6411W-1100
E	110	2-WAY	TE-6411W-1100
	118	2-WAY	TE-6411W-1100
	123	2-WAY	TE-6411W-1100
	135	2-WAY	TE-6411W-1100
	141	2-WAY	TE-6411W-1100
	142	2-WAY	TE-6411W-1100
	238	2-WAY	TE-6411W-1100
	246	2-WAY	TE-6411W-1100
	254	2-WAY	TE-6411W-1100
F	126	2-WAY	TE-6411W-1100
	133	2-WAY	TE-6411W-1100
G	146	2-WAY	TE-6411W-1100
I	112	2-WAY	TE-6411W-1100

MATERIAL LIST

SYM	QTY	MODEL	MANUFACTURE	SIZE	RANGE
VAV-1	39	AS-VAV111-1	JOHNSON		
T-1	39	SEE SCHEDULE	JOHNSON		
DM-1	39	ATP-2040-211	JOHNSON		
V-1	39	SEE SCHEDULE	JOHNSON		

REV	DESCRIPTION OF CHANGE	BY	DATE
1	AS BUILT CHANGES		10/28/97

Precision Control Service Inc.

DRAWN BY: DEP

DRAWING 3 OF 10

SYSTEM VAV BOX TERMINALS

BLDG. DEPT. OF HUMAN SERV.

SITE BLANDING, UTAH

ARCH:

ENGR: COLVIN ENGINEERING

CONTR: WESTERN STATES

JOB NO: C9601 | 04/15/96

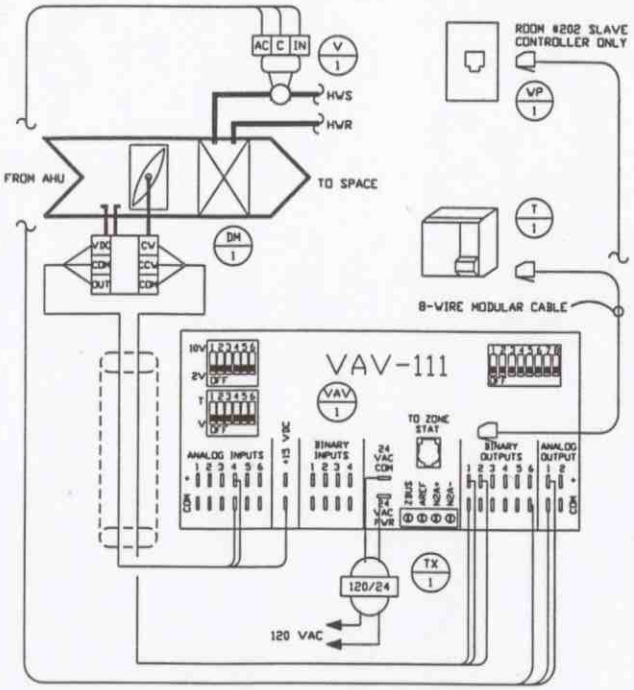

VAV BOXES - REHEAT

TYP. OF 10

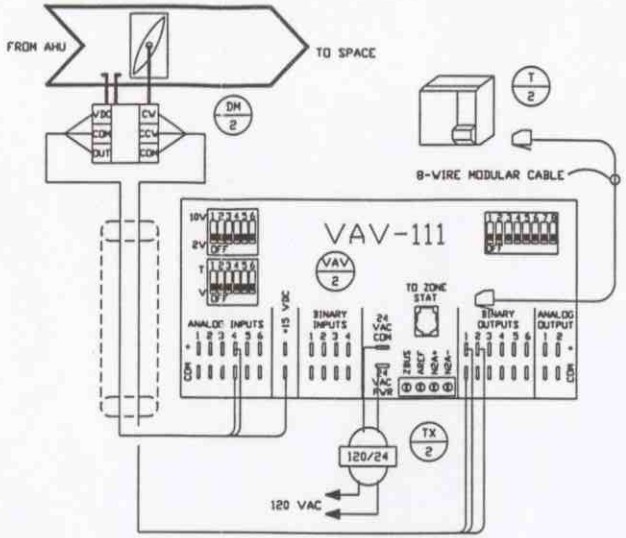

VAV BOXES - COOLING ONLY

TYP. OF 4

VAV BOX VALVE SCHEDULE						
BOX ID	PART NUMBER	SIZE	Cv	PORTS	MANUFACTURE	QTY.
AR	VTM-TN007-200	1/2"	0.7	2-WAY	JOHNSON	0
BR	VTM-TN007-200	1/2"	0.7	2-WAY	JOHNSON	0
CR	VTM-TN007-200	1/2"	0.7	2-WAY	JOHNSON	4
DR	VTM-TN007-200	1/2"	0.7	2-WAY	JOHNSON	2
ER	VTM-TN019-200	1/2"	1.9	2-WAY	JOHNSON	4
FR	VTM-TN019-200	1/2"	1.9	2-WAY	JOHNSON	0
GR	VTM-TN019-200	1/2"	1.9	2-WAY	JOHNSON	0
HR	VTM-TN047-200	1/2"	4.7	2-WAY	JOHNSON	0

BOX ID	ROOM #	PORTING	SENSOR #	
CR	104	2-WAY	TE-6411W-1100	
	105	2-WAY	TE-6411W-1100	
	130	2-WAY	TE-6411W-1100	
	248	2-WAY	TE-6411W-1100	
C	134	2-WAY	TE-6411W-1100	COOLING ONLY
DR	206	2-WAY	TE-6411W-1100	
	225	2-WAY	TE-6411W-1100	
ER	102	2-WAY	TE-6411W-1100	
	220	2-WAY	TE-6411W-1100	
	202	2-WAY 2-WAY	TE-6411W-1100	SEE INSTALLATION GUIDE FOR SENSOR SHARING CONNECTIONS
E	147	2-WAY	TE-6411W-1100	COOLING ONLY

MATERIAL LIST

SYM	QTY	MODEL	MANUFACTURE	SIZE	RANGE
VAV-1,2	12	AS-VAV111-1	JOHNSON		
T-1,2	11	SEE SCHEDULE	JOHNSON		
DM-1,2	12	ATP-2040-211	JOHNSON		
V-1,2	10	SEE SCHEDULE	JOHNSON		
TX-1,2	12	Y63ALB-2	JOHNSON	50VA	120/24VAC
WP-1	1	8-PIN MODULAR	GRAYBAR		

REV	DESCRIPTION OF CHANGE	BY	DATE
1	AS BUILT CHANGES	DEP	08/97

Precision Control Service Inc.

DRAWING 4 OF 10 | DRAWN BY: DEP

SYSTEM VAV BOX W/REHEAT

BLDG. DEPT. OF HUMAN SERV.

SITE BLANDING, UTAH

ARCH.:

ENGR.: COLVIN ENGINEERING

CONTR.: WESTERN STATES

JOB NO.: C9601 | 04/15/96

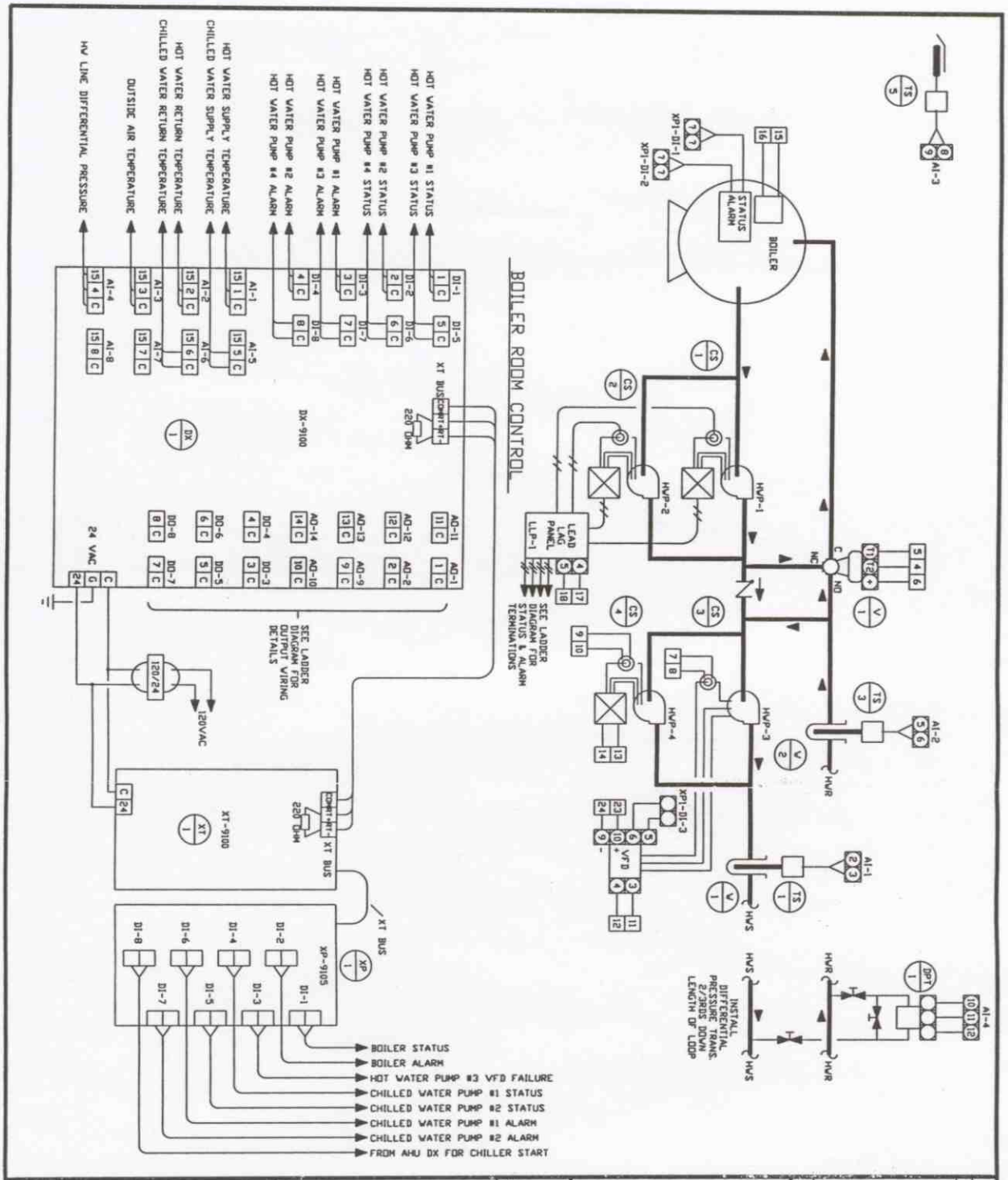

ARCH.:	DRAWING 5 OF 10	DRAWN BY: DEP	Precision Control Service Inc.
ENGR.: COLVIN ENGINEERING	SYSTEM BOILER ROOM		
CONTR.: WESTERN STATES	BLDG. DEPT. OF HUMAN SERV.		
JOB NO.: C9601 04/15/96	SITE BLANDING, UTAH		

REV	DESCRIPTION OF CHANGE	BY	DATE
1	AS BUILT CHANGES	DEP	08/97

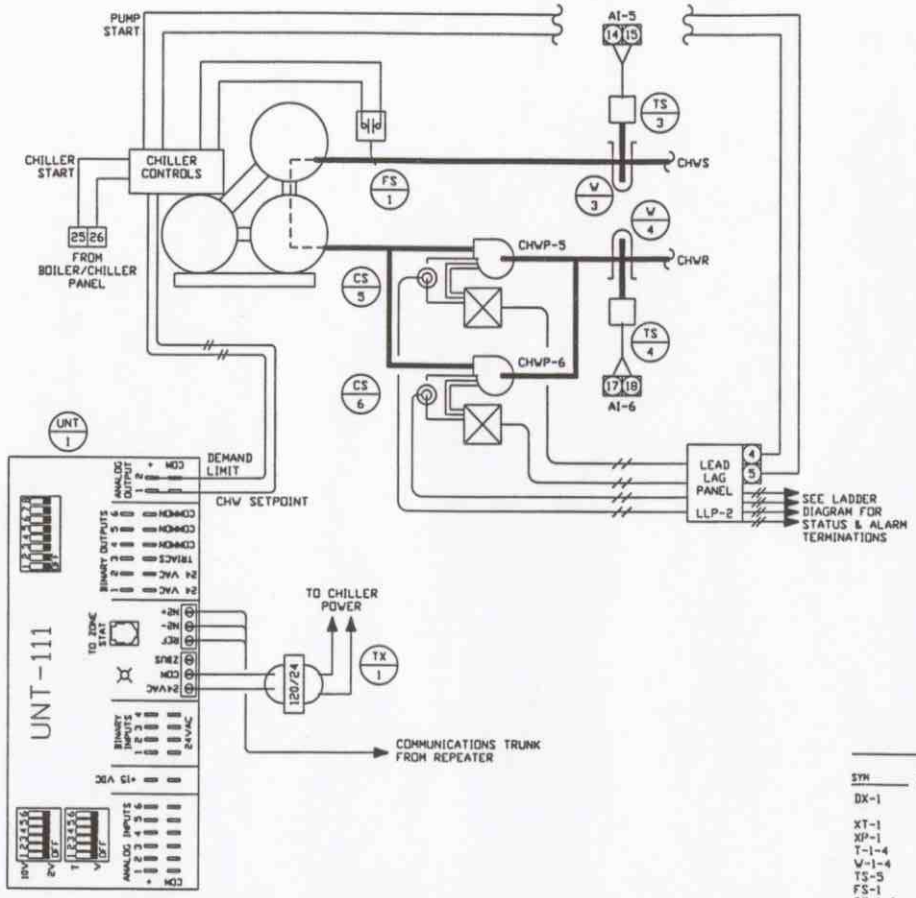

CHILLER ROOM CONTROL

VALVE SCHEDULE						
ID	QTY	PART NUMBER	MANUF.	SIZE	Cv	PORTS
V-1	1 1 1 1	VB-4324-6 M130GGA-3 Y20CBD-6 Q99AUP-3	JOHNSON	1 1/2"	27.5	3-WAY

MATERIAL LIST

SYM	QTY	MODEL	MANUFACTURER	SIZE	RANGE
DX-1	1	DX-9100-8454	JOHNSON		
	1	DX-9100-8990	JOHNSON		
XT-1	1	XT-9100-8204	JOHNSON		
XP-1	1	XP-9105-8004	JOHNSON		
T-1-4	4	TE-631AP-1	JOHNSON		
W-1-4	4	WZ-1000-5	JOHNSON		
TS-5	1	TE-6313P-1	JOHNSON		
FS-1	1	F61KB-11C	JOHNSON		
CS-1-6	6	H-908	VERIS		
V-1	1	SEE SCHEDULE	JOHNSON		
UNT-1	1	AS-UNT111-1	JOHNSON		
TX-1	1	Y63AL,B-2C	JOHNSON		
DPT-1	1	PR-282-2-2-D-1-1-A	MAMAC	12VDC	0-30PSI

*** NOTE *** SEE PAGE 5 FOR CONNECTIONS TO CONTROLLER

REV	DESCRIPTION OF CHANGE	BY	DATE
1	AS BUILT CHANGES	DEP	08/06/97

Precision Control Service Inc.

DRAWING 6 OF 10 — DRAWN BY: DEP

SYSTEM CHILLER ROOM

BLDG. DEPT. OF HUMAN SERV.

SITE BLANDING, UTAH

ARCH:

ENGR: COLVIN ENGINEERING

CONTR: WESTERN STATES

JOB NO: C9601 | 04/15/96

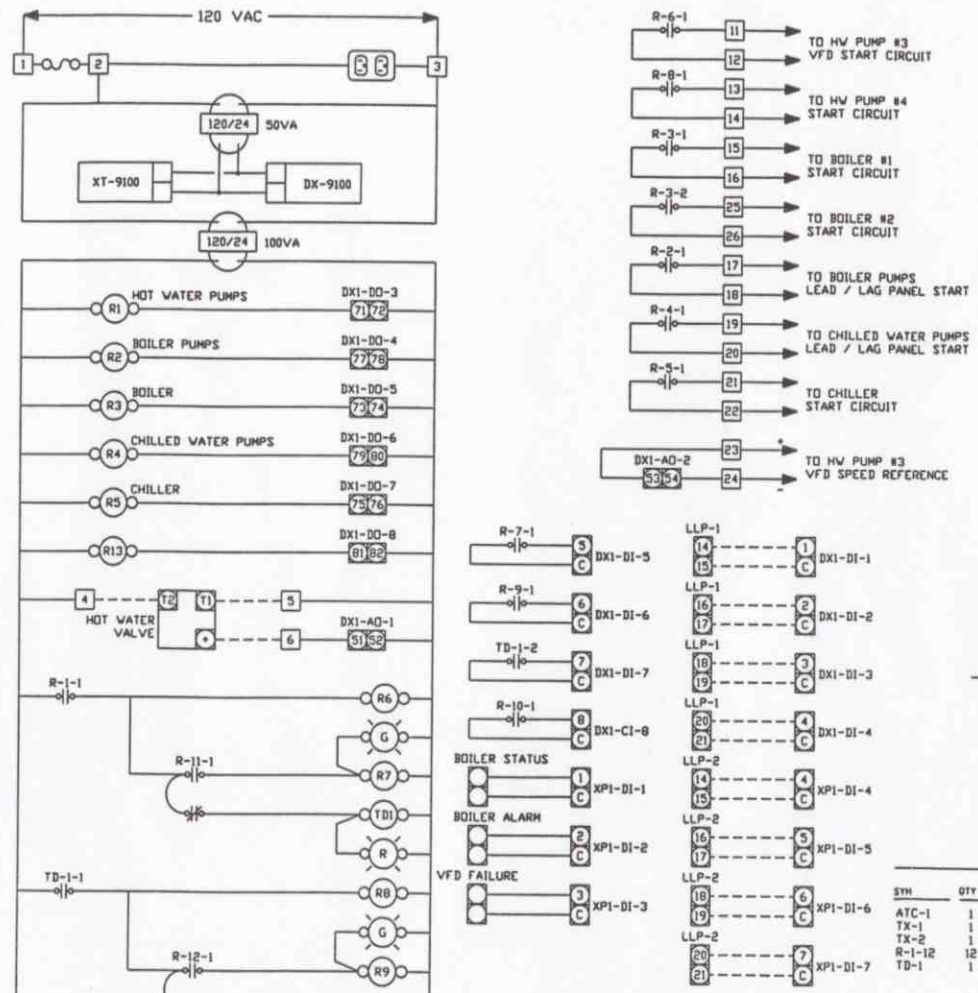

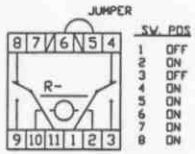

KNOB MIN = 9.3 SEC
KNOB MAX = 54.2 SEC

KNOB SETTING = 46% = 30 SEC

TYPICAL TIME DELAY RELAY

MATERIAL LIST

SYM	QTY	MODEL	MANUFACTURER	SIZE	RANGE
ATC-1	1	M-8100-2430	JOHNSON	24 X 30	
TX-1	1	Y63AL8-2	JOHNSON	50VA	120/24
TX-2	1	TZ-5000-10	JOHNSON	100VA	120/24
R-1-12	12	RH2B-UAC24V	IDEC	24VAC	DPDT
TD-1	1	P-186-8-2	SIEBE	24VAC	DPDT

REV	DESCRIPTION OF CHANGE	BY	DATE
1	AS BUILT CHANGES		SEP 08/97

Precision Control Service Inc.

DRAWN BY: DEP

DRAWING 7 OF 10

SYSTEM BLR. & CHILLER LADDER

BLDG. DEPT. OF HUMAN SERV.

SITE BLANDING, UTAH

ARCH.:

ENGR.: COLVIN ENGINEERING

CONTR.: WESTERN STATES

JOB NO.: C9601 | 04/15/96

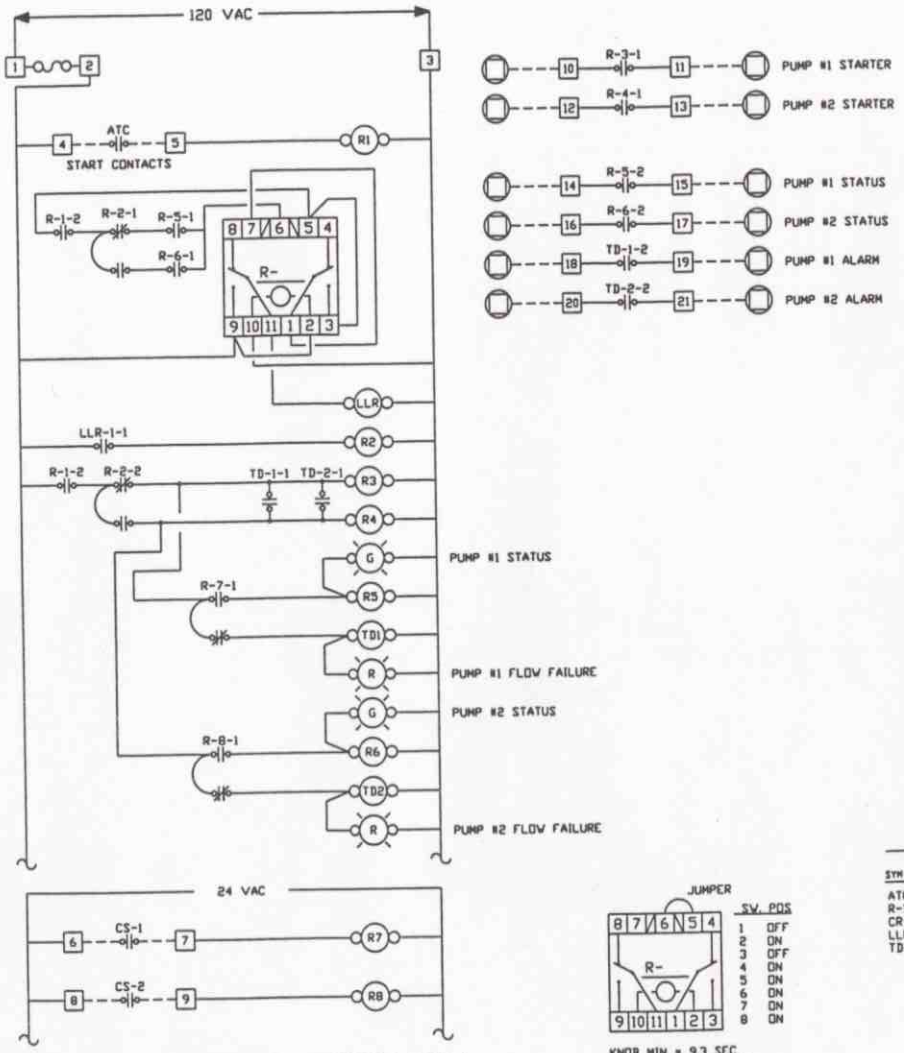

PUMP LEAD / LAG PANEL LADDER DIAG.

TYP. OF 2 PANELS

SW. POS	
1	OFF
2	ON
3	OFF
4	ON
5	ON
6	ON
7	ON
8	ON

KNOB MIN = 9.3 SEC
KNOB MAX = 54.2 SEC

KNOB SETTING = 46% = 30 SEC

TYPICAL TIME DELAY RELAY

MATERIAL LIST

SYM	QTY	MODEL	MANUFACTURE	SIZE	RANGE
ATC-1	2	M-8100-1218	JOHNSON		
R-1-8	12	RH2B-U120	IDEC		
CR-1	2	CNT-35-76	POTTER BRUMFIELD		
LLR-1	2	47A810AF	FURNAS		
TD-1,2	4	P-186-8-2	SIEBE		

REV	DESCRIPTION OF CHANGE	BY	DATE
1	AS BUILT CHANGES		08-30-97

Precision Control Service Inc.

DRAWING 8 OF 10 | DRAWN BY: DEP

SYSTEM LEAD / LAG PANEL

BLDG. DEPT. OF HUMAN SERV.

SITE BLANDING, UTAH

ARCH.:

ENGR.: COLVIN ENGINEERING

CONTR.: WESTERN STATES

JOB NO.: C9601 | 04/15/96

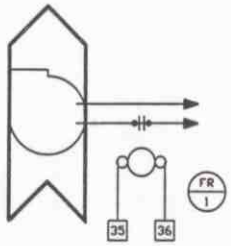

NEW BATHROOM EXHAUST FAN

TYP. OF 1

MATERIAL LIST

SYM	QTY	MODEL	MANUFACTURER	SIZE	RANGE
FR-1	1	5X849	DAYTON	24VAC	SPST

REV	DESCRIPTION OF CHANGE	BY	DATE
1	AS BUILT CHANGES		8/28/97

Precision Control Service Inc.

DRAWING 9 OF 10

DRAWN BY: DEP

SYSTEM MISCELLANEOUS

BLDG. DEPT. OF HUMAN SERV.

SITE BLANDING, UTAH

ARCH.:

ENGR.: COLVIN ENGINEERING

CONTR.: WESTERN STATES

JOB NO.: C9601 04/15/96

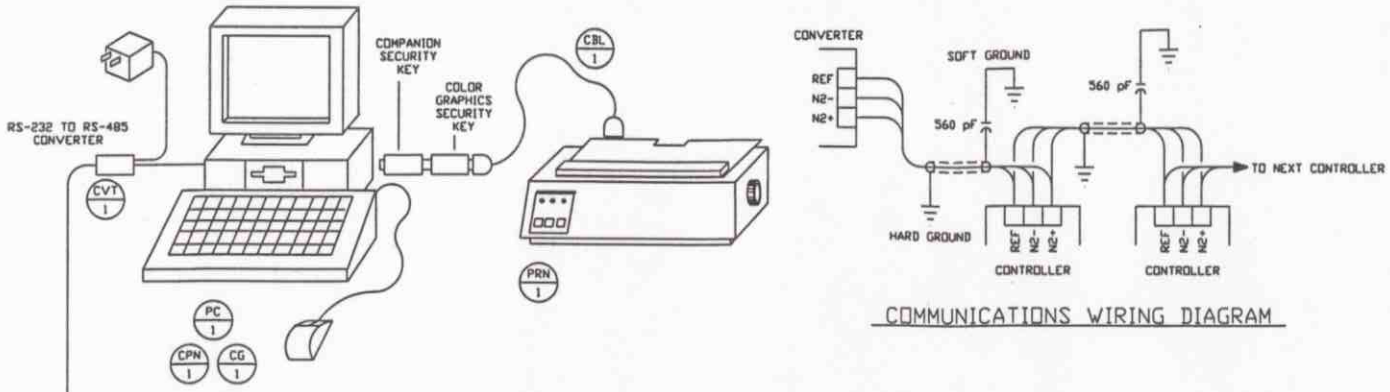

COMMUNICATIONS WIRING DIAGRAM

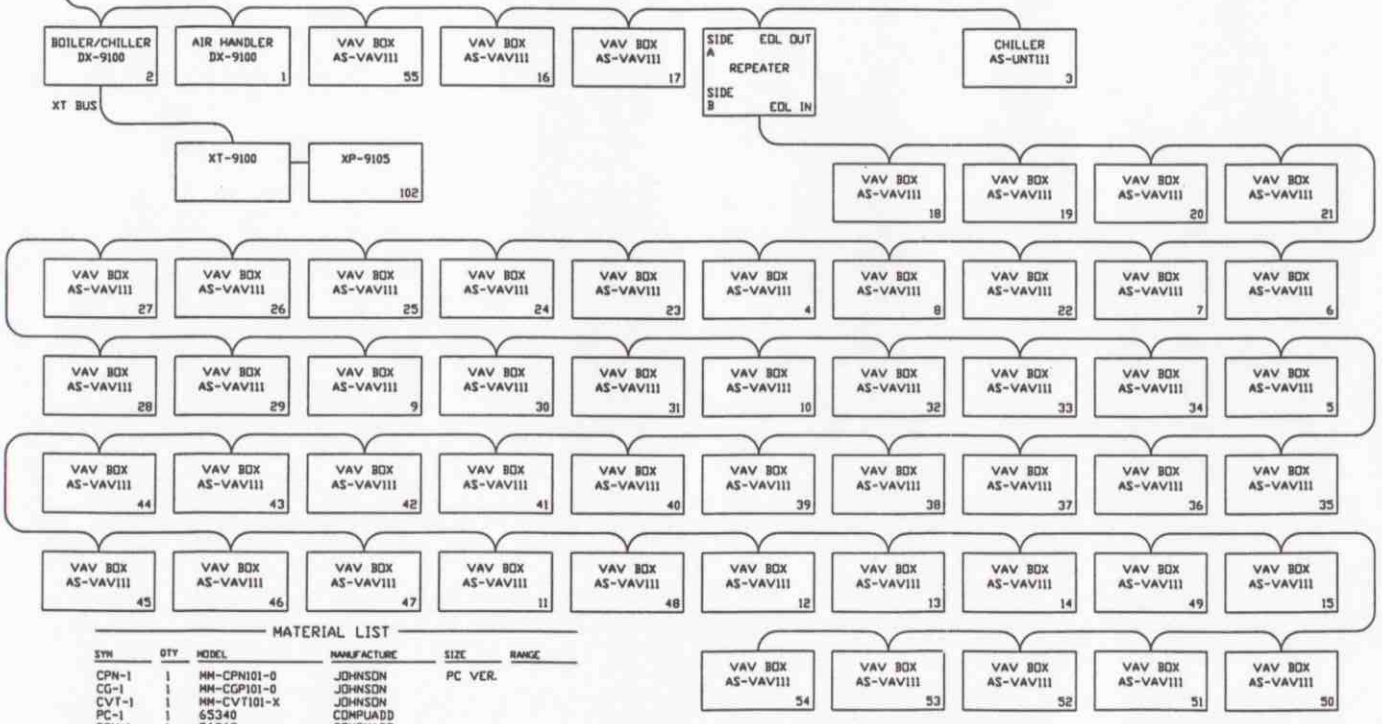

MATERIAL LIST

SYM	QTY	MODEL	MANUFACTURE	SIZE	RANGE
CPN-1	1	MM-CPN101-0	JOHNSON	PC VER.	
CG-1	1	MM-CGP101-0	JOHNSON		
CVT-1	1	MM-CVT101-X	JOHNSON		
PC-1	1	65340	COMPUADD		
PRN-1	1	56365	COMPUADD		
CBL-1	1	39627	COMPUADD	10 '	
RPT-1	1	4683-TTM-1	ACROMAG		
ENC-1	1	BZ-1000-7	JOHNSON		

REV	DESCRIPTION OF CHANGE	BY	DATE
1	AS BUILT CHANGES		10/29/97

Precision Control Service Inc.

DRAWING 10 OF 10 | DRAWN BY: DEP

SYSTEM TRUNK RISER DIAGRAM

BLDG. DEPT. OF HUMAN SERV.

SITE BLANDING, UTAH

ARCH:

ENGR: COLVIN ENGINEERING

CONTR: WESTERN STATES

JOB NO.: C9601 | 04/14/96