PROJECT NO.	SHEET NO.
05112550	1

STATE OF UTAH
DIVISION OF FACILITIES CONSTRUCTION AND MANAGEMENT

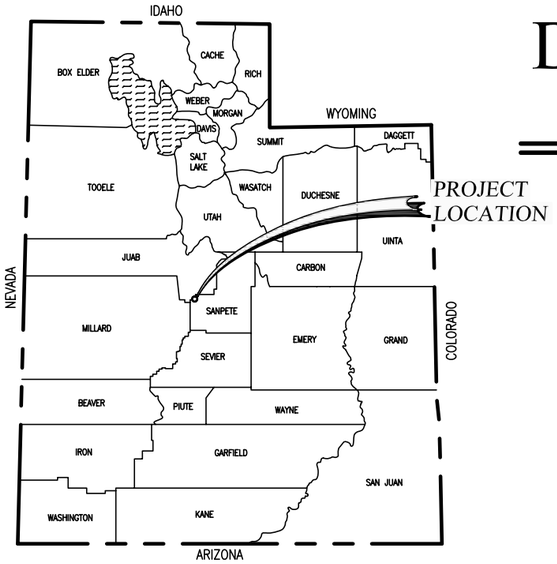

PUBLIC SAFETY MOAB REGIONAL TRUCK DRIVER TRAINING AREA PAVING IMPROVEMENT PROJECT

DFCM PROJECT NO. 05112550

2006

INDEX TO SHEETS

SHEET	DESCRIPTION
1	TITLE SHEET
2A–2B	TYPICAL SECTIONS SHEETS 1–2
2C	RETENTION POND CROSS SECTIONS
2D	FENCE DETAIL
3A–3C	CROSS SECTIONS
4	OVERALL SITE PLAN
4A–4B	PLAN SHEETS
5	ACCESS ROAD PLAN & PROFILE

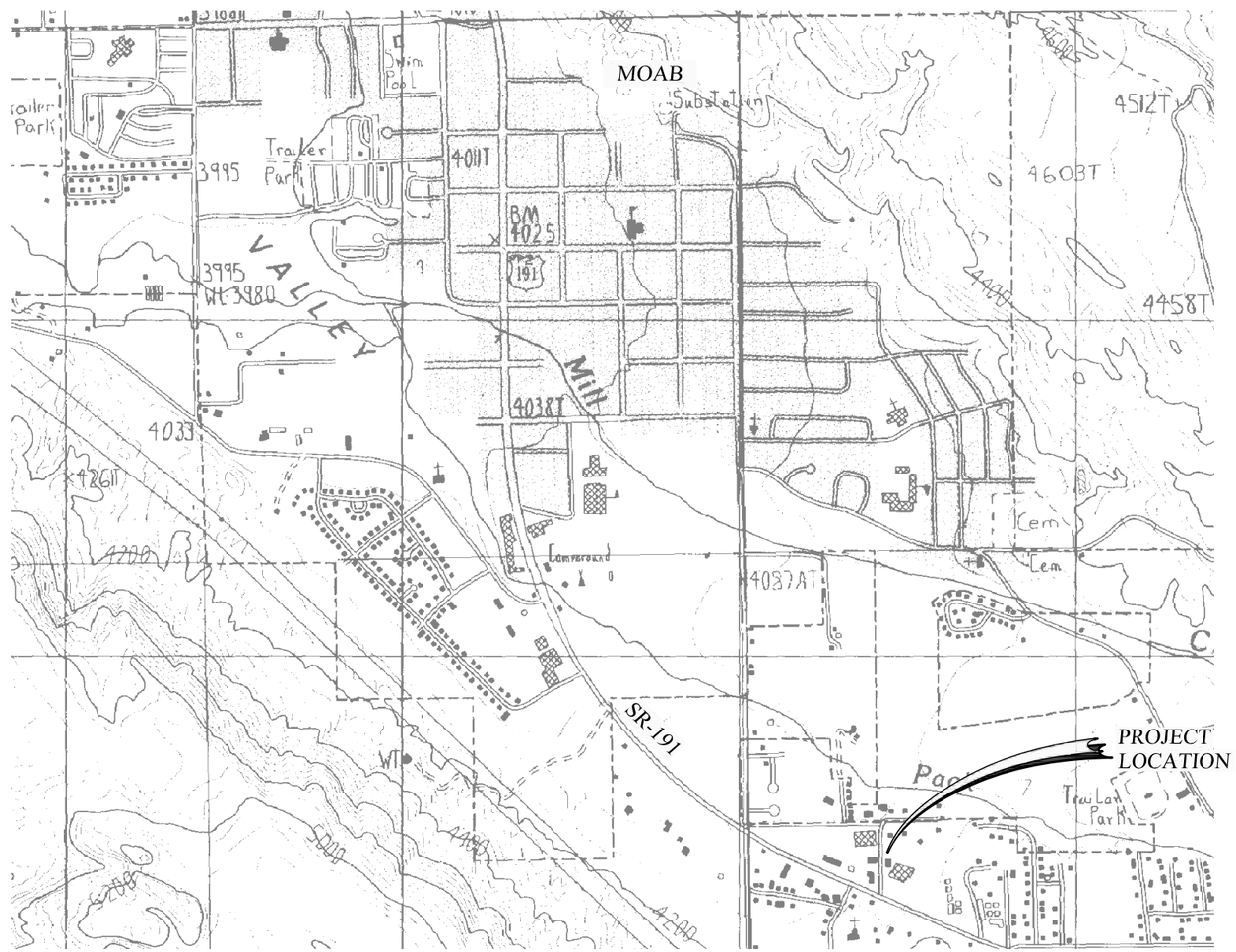

N

RECOMMENDED FOR APPROVAL:

PROJECT ENGINEER — 1–20–06 DATE

LICENSED PROFESSIONAL ENGINEER No. 146602 CRAIG E. JOHANSEN STATE OF UTAH

APPROVALS:

DFCM — 1–20–06 DATE

STATE OF UTAH
DIVISION OF FACILITIES CONSTRUCTION AND MANAGEMENT

johansen & tuttle ENGINEERING INC.
BOX 487, CASTLE DALE, UTAH 84513 (435) 381-2523
FAX (435) 381-2522 email jt@etv.net

MOAB, UTAH

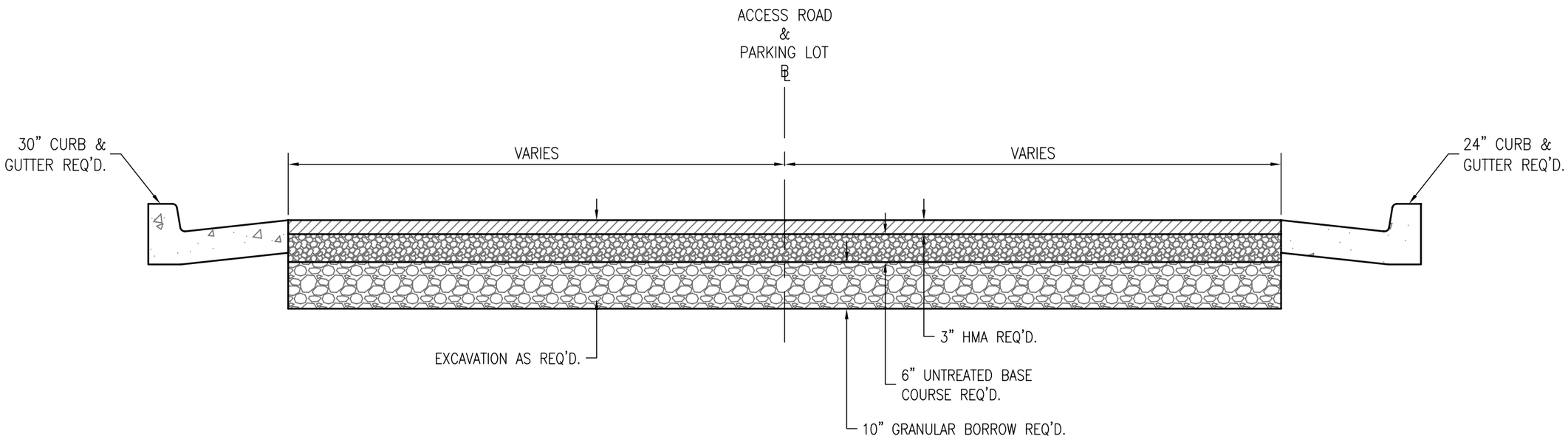

TYPICAL ASPHALT SURFACE SECTION

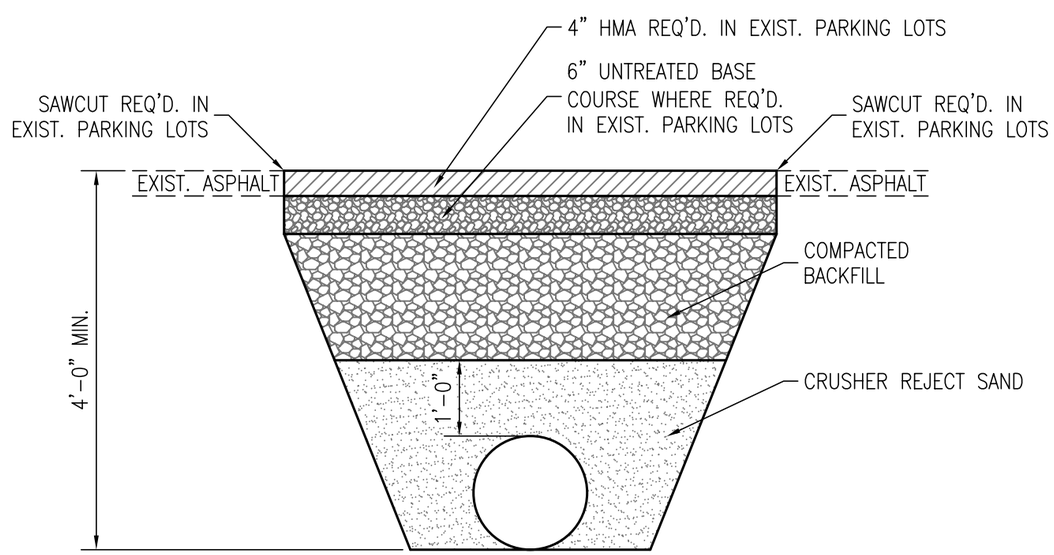

TYPICAL DRAIN PIPE TRENCH

DESIGNED HRT	1-06	CHECKED CEJ	1-06
DRAWN KLB	1-06	CHECKED HRT	1-06
SURVEYED BHT	6-05	CHECKED LMS	6-05
R.O.W.		CHECKED	

Johansen & Tuttle ENGINEERING INC.
BOX 487, CASTLE DALE, UTAH 84513 (435) 381-2523
FAX (435) 381-2522 email jt@etv.net

STATE of UTAH DFCM
PUBLIC SAFETY MOAB REGIONAL
TRUCK DRIVER TRAINING AREA
PAVING IMPROVEMENT PROJECT

TYPICAL SECTIONS
SHEET 1

PROJECT NO.
05112550

SHEET NO.
2A

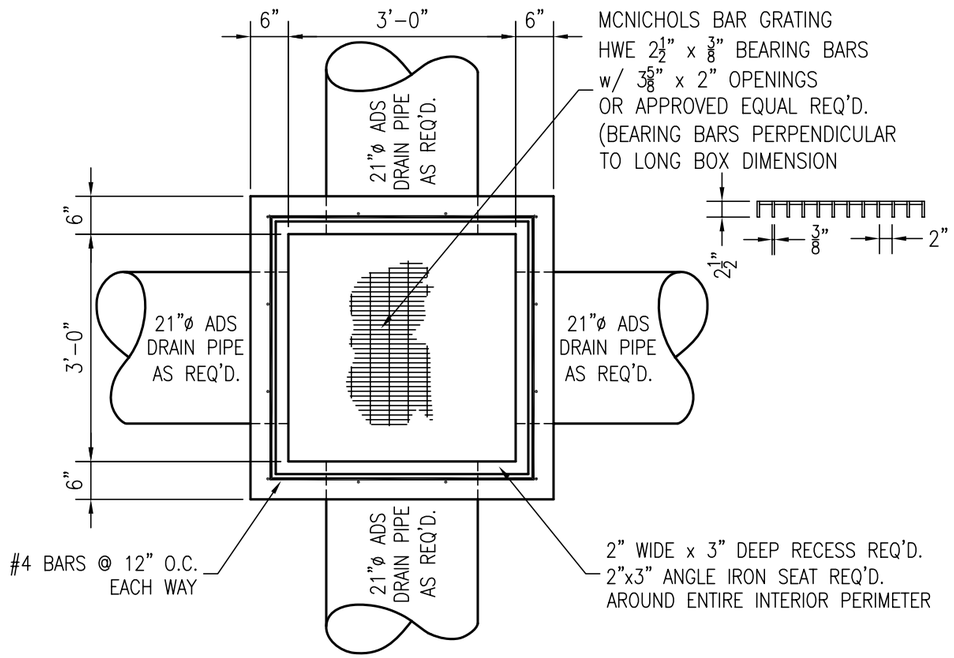

TYPICAL TYPE 1 INLET BOX

NOTES:

1. ALL INLET BOXES SHALL HAVE 6" FLOORS
2. THE DEPTH OF INLET BOXES SHALL BE AS DIRECTED BY THE ENGINEER.
3. 2" WEEP HOLES WITH SCREEN SHALL BE REQ'D. AS DIRECTED BY THE ENGINEER.
4. EXISTING DRAINAGE PIPING SHALL BE CONNECTED TO THE INLET BOXES.

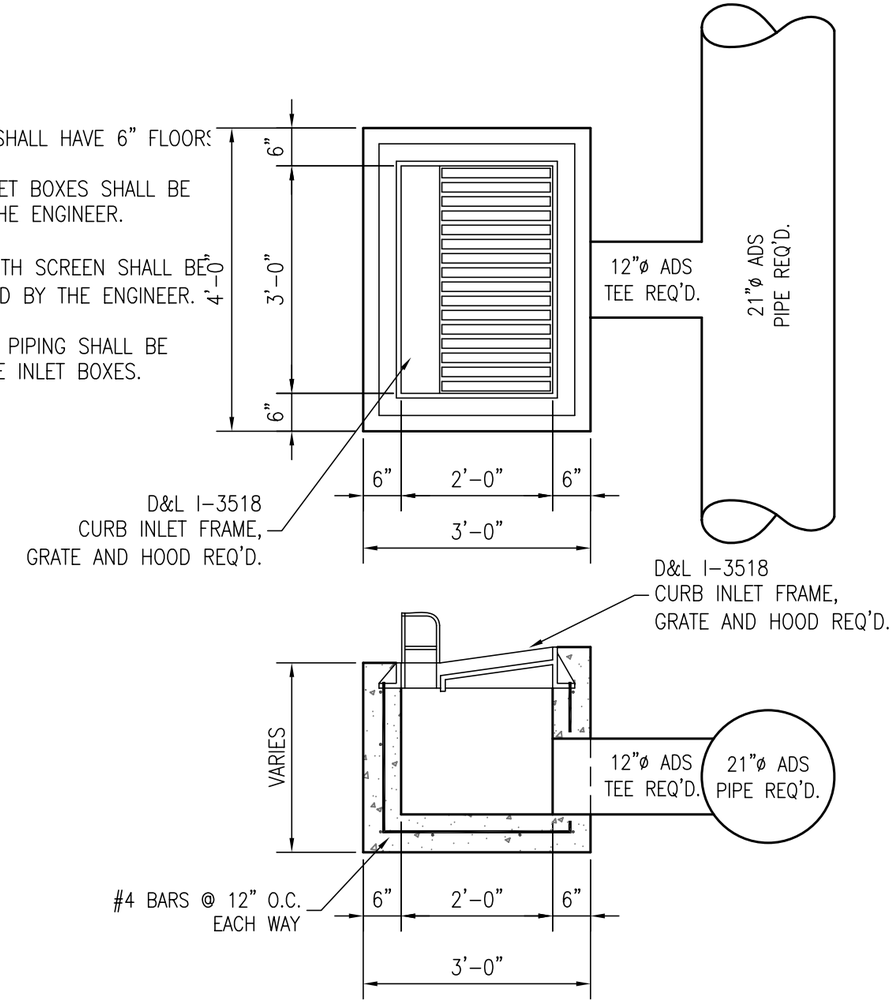

TYPICAL TYPE 2 INLET BOX

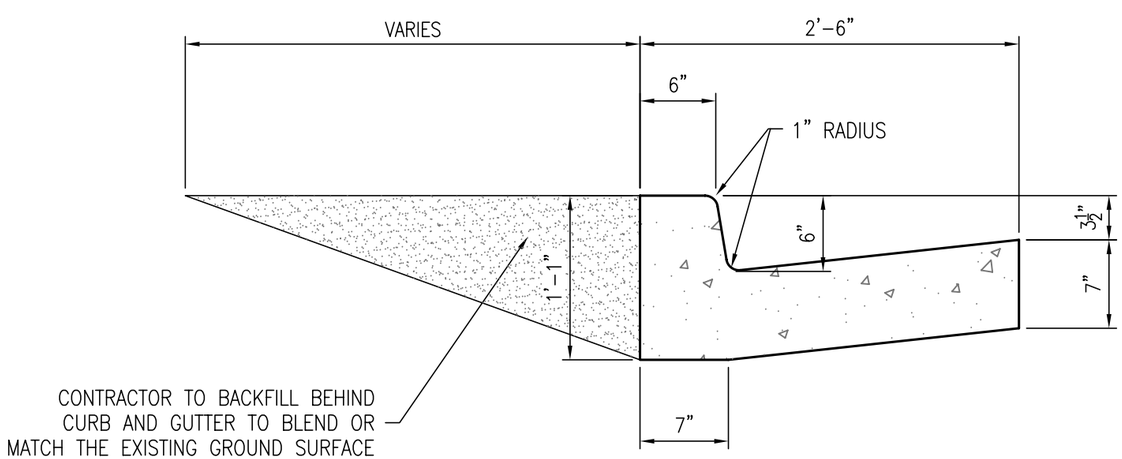

TYPICAL 30" CURB & GUTTER

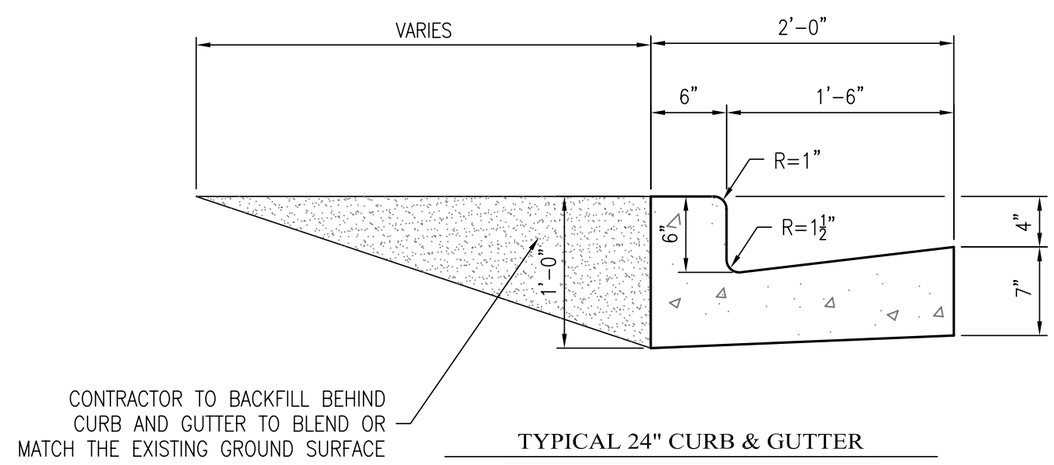

TYPICAL 24" CURB & GUTTER

DESIGNED HRT	1-06	CHECKED CEJ	1-06
DRAWN KLB	1-06	CHECKED HRT	1-06
SURVEYED BHT	6-05	CHECKED LMS	6-05
R.O.W.		CHECKED	

johansen & tuttle ENGINEERING INC.
BOX 487, CASTLE DALE, UTAH 84513 (435) 381-2523
FAX (435) 381-2522 email jt@etv.net

STATE of UTAH DFCM
PUBLIC SAFETY MOAB REGIONAL
TRUCK DRIVER TRAINING AREA
PAVING IMPROVEMENT PROJECT

TYPICAL SECTIONS
SHEET 2

PROJECT NO. 05112550

SHEET NO. 2B

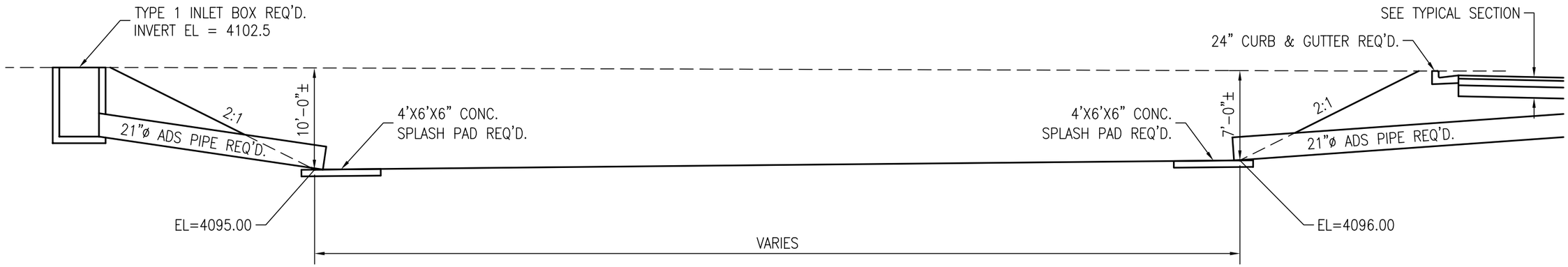

A/4A RETENTION POND CROSS SECTION

SCALE: 1/8"=1'-0"

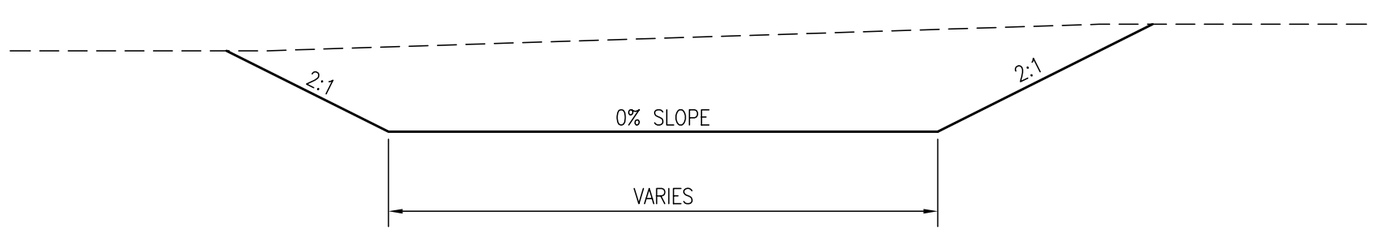

B/4A RETENTION POND CROSS SECTION

SCALE: 1/8"=1'-0"

DESIGNED HRT	1-06	CHECKED CEJ	1-06
DRAWN KLB	1-06	CHECKED HRT	1-06
SURVEYED BHT	6-05	CHECKED LMS	6-05
R.O.W.		CHECKED	

johansen & tuttle ENGINEERING INC.
BOX 497, CASTLE DALE, UTAH 84513 (435) 381-2523
FAX (435) 381-2522 email jt@etv.net

STATE of UTAH DFCM
PUBLIC SAFETY MOAB REGIONAL
TRUCK DRIVER TRAINING AREA
PAVING IMPROVEMENT PROJECT

RETENTION POND
CROSS SECTIONS

PROJECT NO.
05112550

SHEET NO.
2C

ALL PIPE SHALL
BE SCHEDULE 40

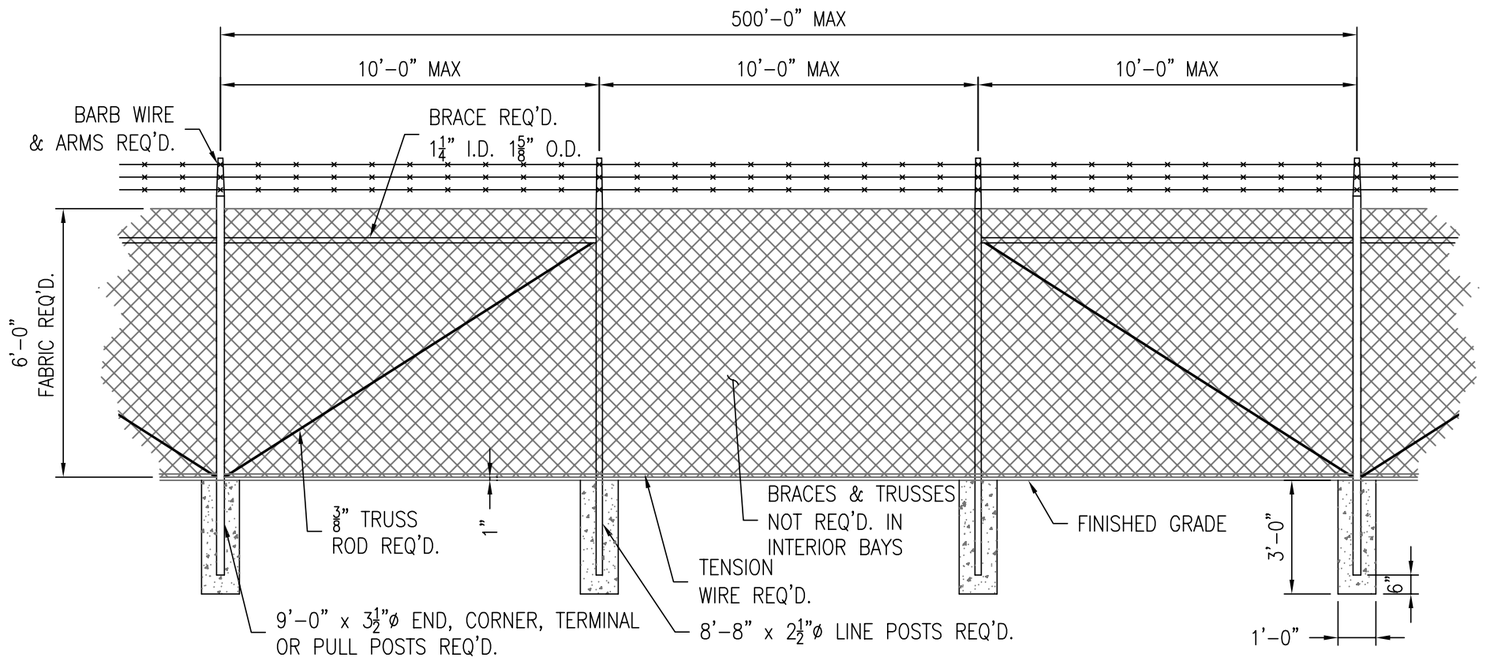

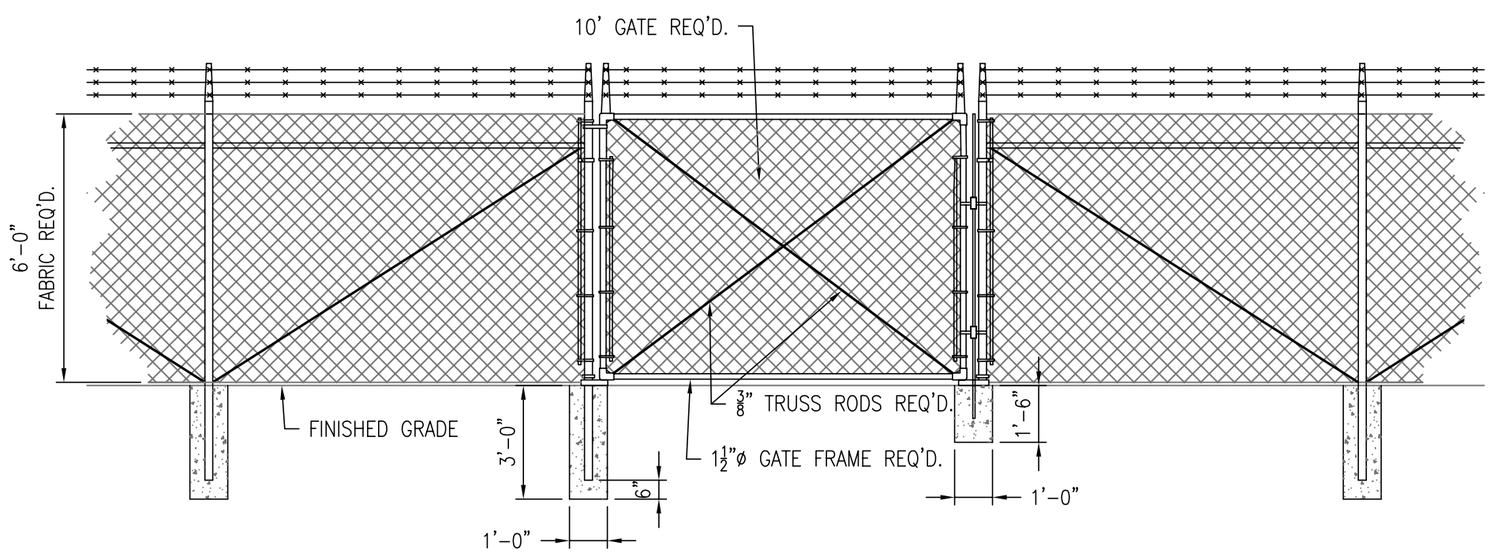

DESIGNED	HRT	1-06	CHECKED	CEJ	1-06
DRAWN	KLB	1-06	CHECKED	HRT	1-06
SURVEYED	BHT	6-05	CHECKED	LMS	6-05
R.O.W.			CHECKED		

Johansen & Tuttle ENGINEERING INC.
BOX 487, CASTLE DALE, UTAH 84513 (435) 381-2523
FAX (435) 381-2522 email jt@etv.net

STATE of UTAH DFCM
PUBLIC SAFETY MOAB REGIONAL
TRUCK DRIVER TRAINING AREA
PAVING IMPROVEMENT PROJECT

FENCE DETAIL

PROJECT NO.
05112550

SHEET NO.
2D

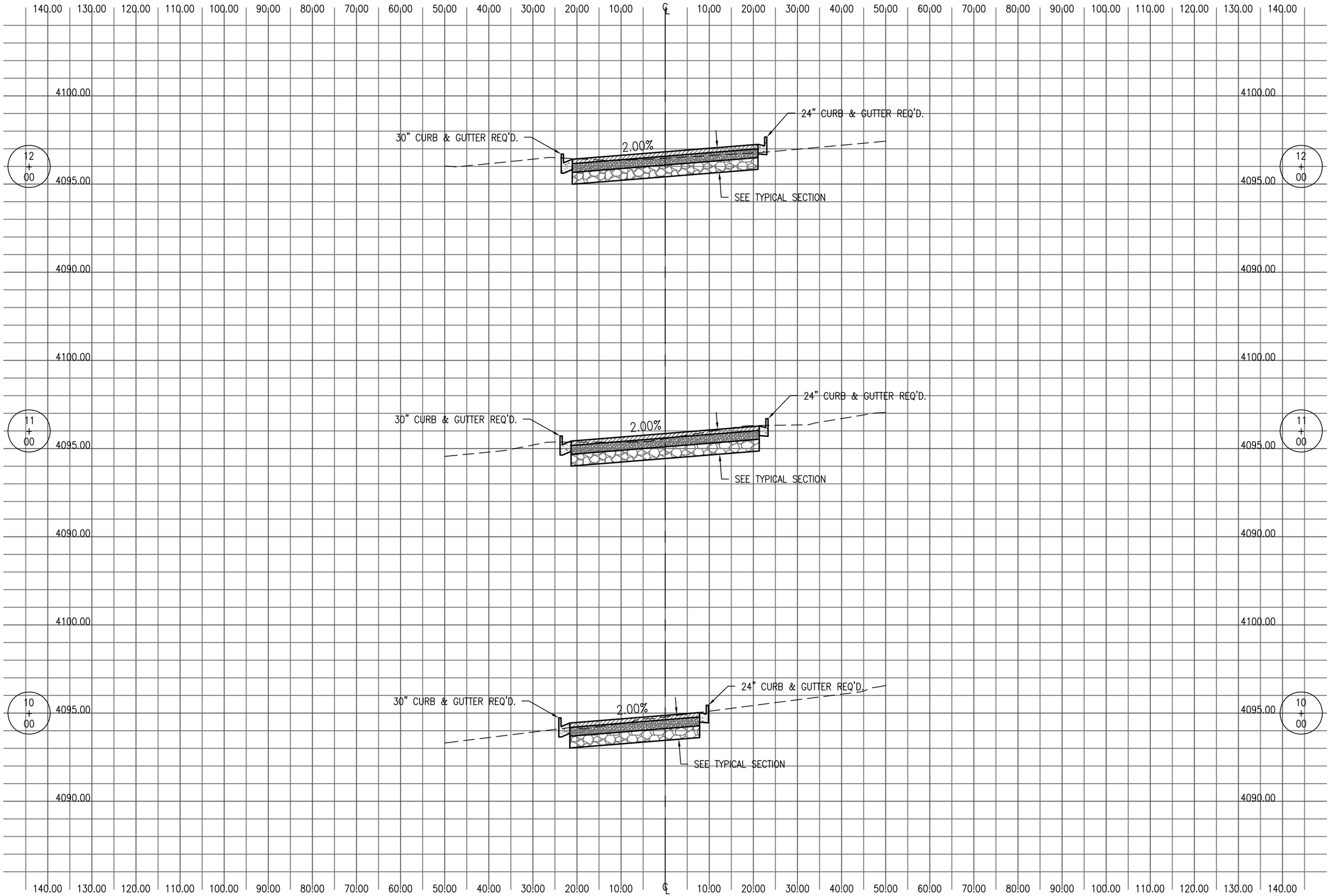

DESIGNED HRT	1-06	CHECKED CEJ	1-06
DRAWN KLB	1-06	CHECKED HRT	1-06
SURVEYED BHT	6-05	CHECKED LMS	6-05
R.O.W.		CHECKED	

johansen & tuttle ENGINEERING INC.
BOX 487, CASTLE DALE, UTAH 84513 (435) 381-2523
FAX (435) 381-2522 email jt@etv.net

STATE of UTAH DFCM
PUBLIC SAFETY MOAB REGIONAL
TRUCK DRIVER TRAINING AREA
PAVING IMPROVEMENT PROJECT

CROSS SECTIONS
SHEET 1

PROJECT NO.
05112550

SHEET NO.
3A

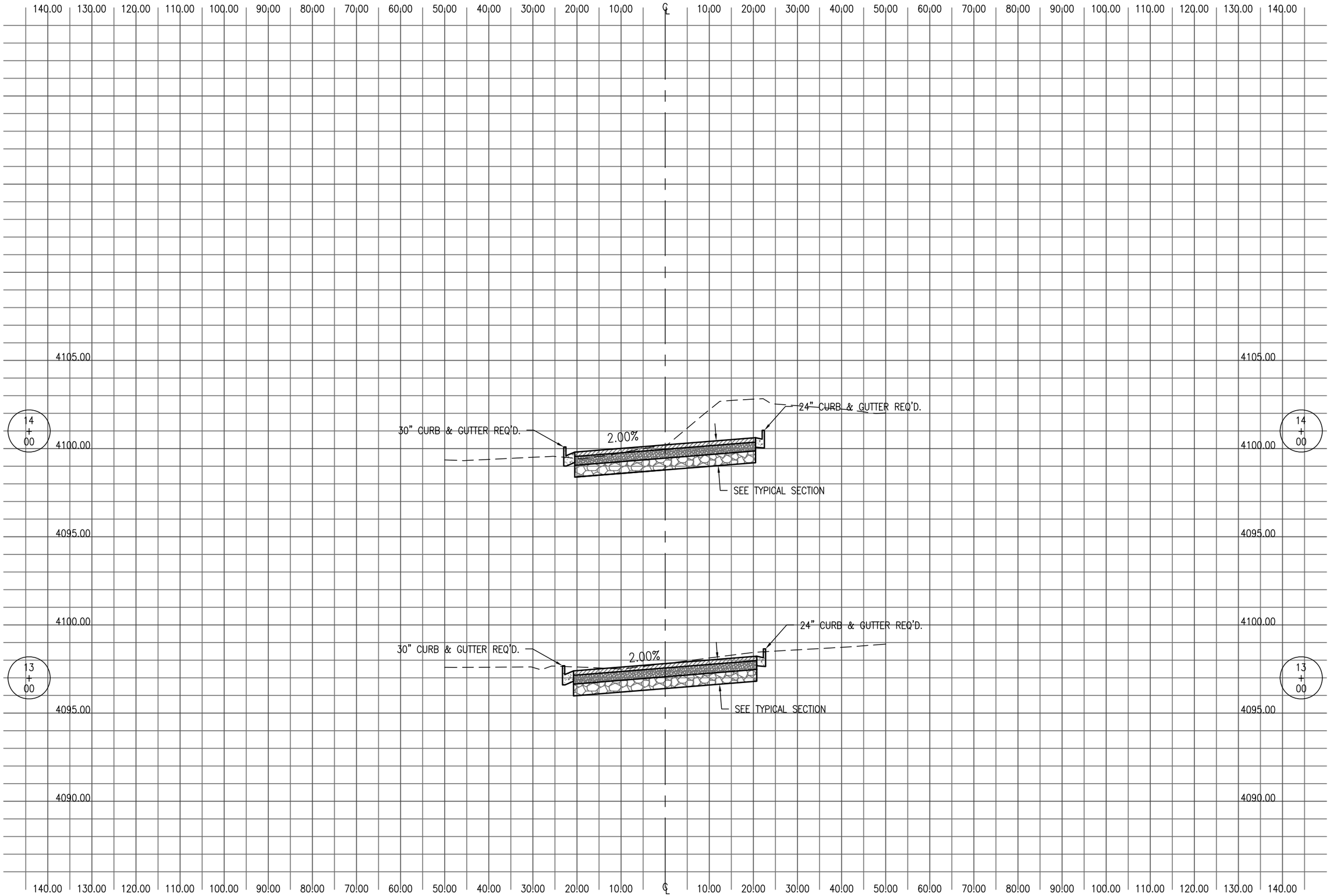

DESIGNED HRT	1-06	CHECKED CEJ	1-06
DRAWN KLB	1-06	CHECKED HRT	1-06
SURVEYED BHT	6-05	CHECKED LMS	6-05
R.O.W.		CHECKED	

johansen & tuttle ENGINEERING INC.
BOX 487, CASTLE DALE, UTAH 84513 (435) 381-2523
FAX (435) 381-2522 email jt@etv.net

STATE of UTAH DFCM
PUBLIC SAFETY MOAB REGIONAL
TRUCK DRIVER TRAINING AREA
PAVING IMPROVEMENT PROJECT

CROSS SECTIONS
SHEET 2

PROJECT NO. 05112550

SHEET NO. 3B

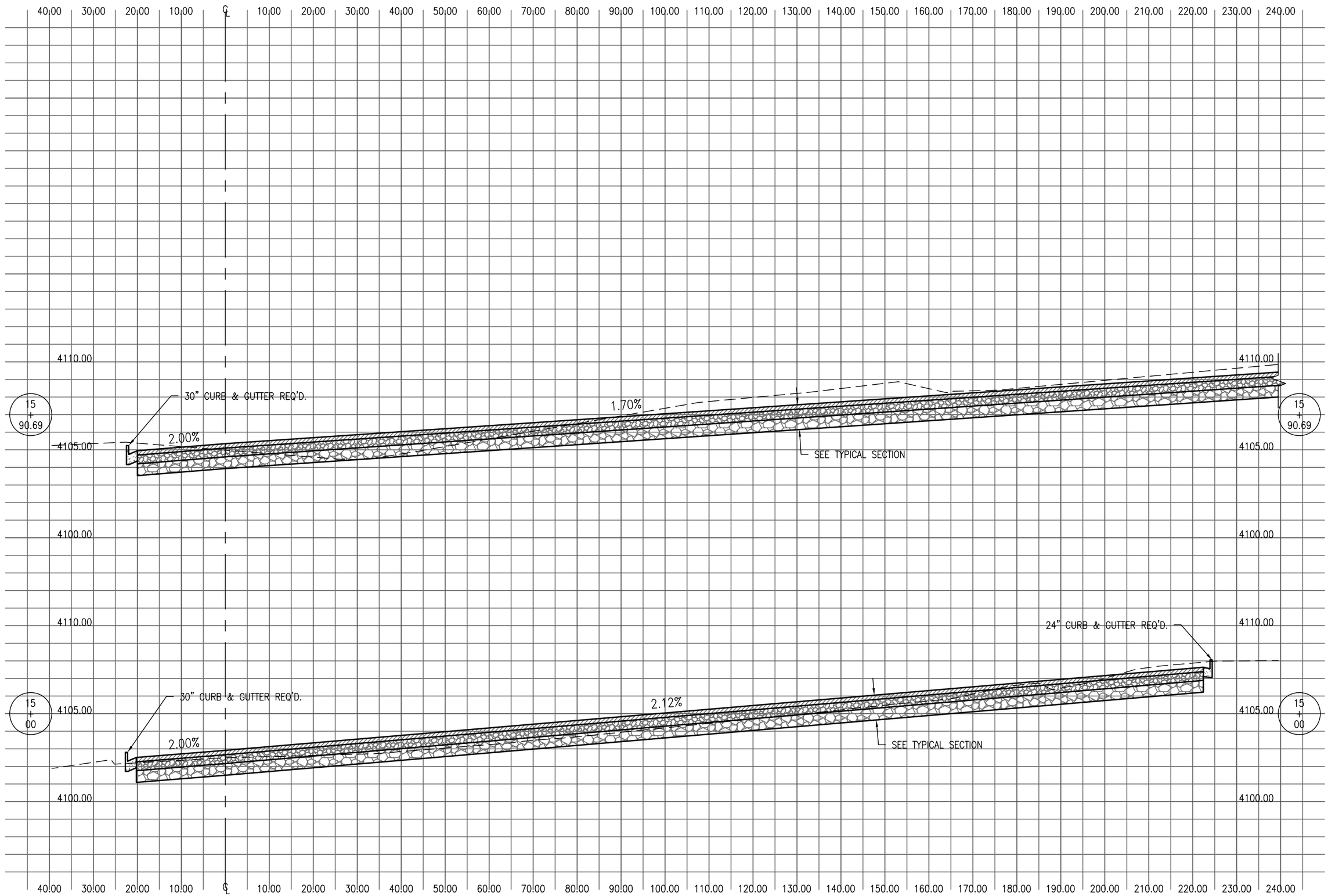

DESIGNED HRT	1-06	CHECKED CEJ	1-06
DRAWN KLB	1-06	CHECKED HRT	1-06
SURVEYED BHT	6-05	CHECKED LMS	6-05
R.O.W.		CHECKED	

johansen & tuttle ENGINEERING INC.
BOX 487, CASTLE DALE, UTAH 84513 (435) 381-2523
FAX (435) 381-2522 email jt@etv.net

STATE of UTAH DFCM
PUBLIC SAFETY MOAB REGIONAL
TRUCK DRIVER TRAINING AREA
PAVING IMPROVEMENT PROJECT

CROSS SECTIONS
SHEET 3

PROJECT NO. 05112550

SHEET NO. 3C

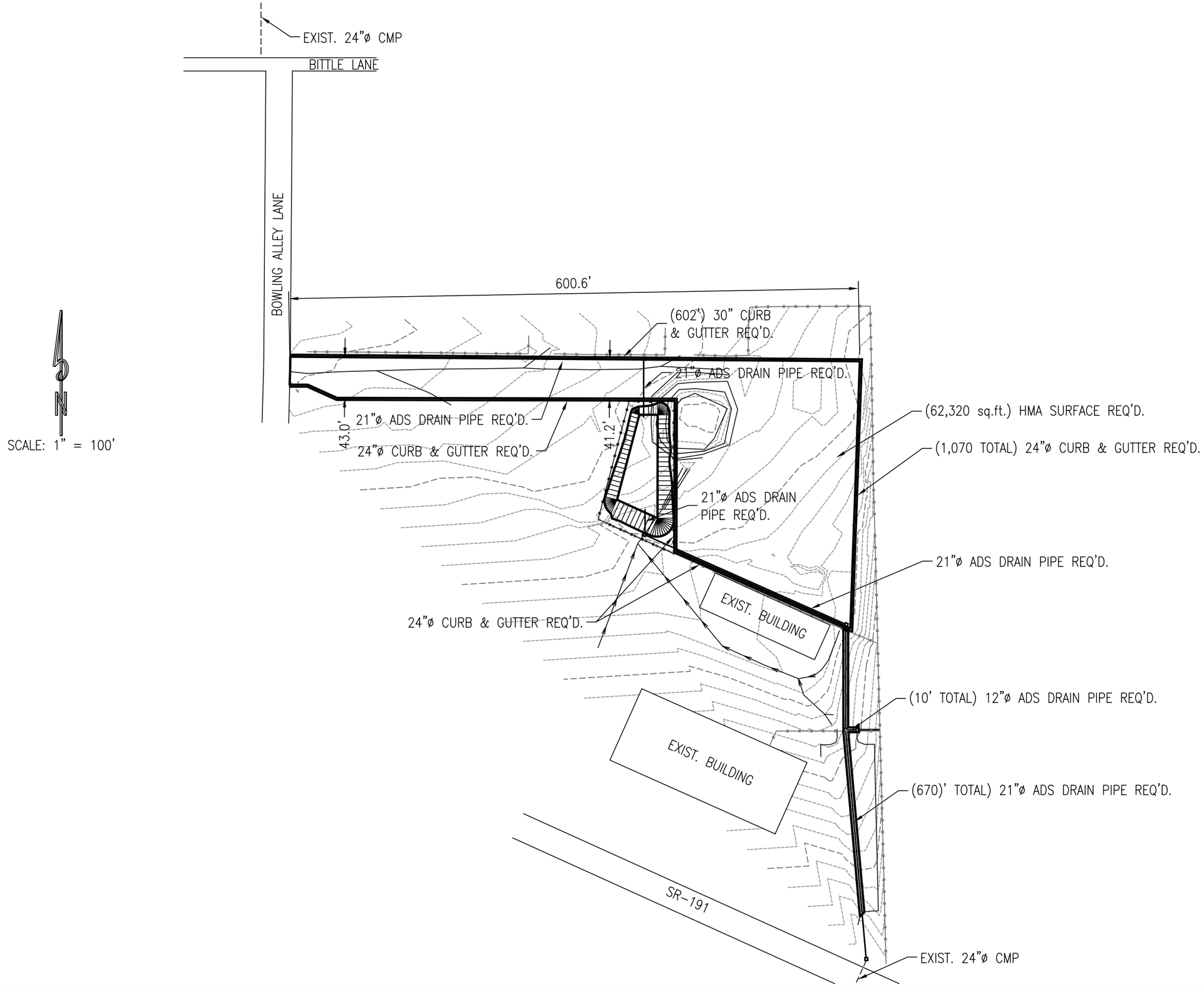

DESIGNED HRT	1-06	CHECKED CEJ	1-06
DRAWN KLB	1-06	CHECKED HRT	1-06
SURVEYED BHT	6-05	CHECKED LMS	6-05
R.O.W.		CHECKED	

johansen & tuttle ENGINEERING INC.
BOX 487, CASTLE DALE, UTAH 84513 (435) 381-2523
FAX (435) 381-2522 email jt@etv.net

STATE of UTAH DFCM
PUBLIC SAFETY MOAB REGIONAL
TRUCK DRIVER TRAINING AREA
PAVING IMPROVEMENT PROJECT

OVERALL SITE PLAN

PROJECT NO. 05112550

SHEET NO. 4

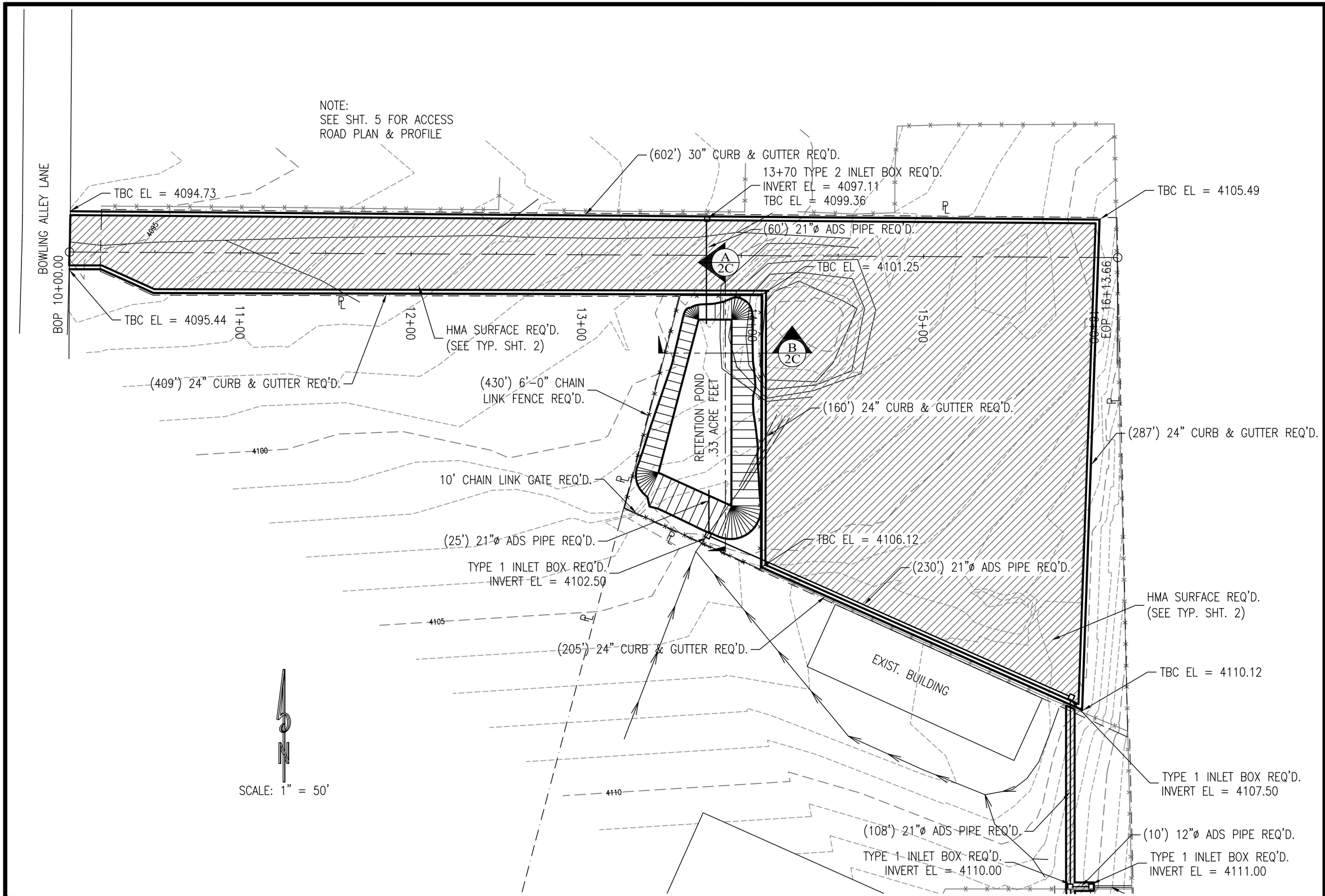

DESIGNED	HRT	1-06	CHECKED	CEJ	1-06
DRAWN	KLB	1-06	CHECKED	HRT	1-06
SURVEYED	BHT	6-05	CHECKED	LMS	6-05
R.O.W.			CHECKED		

johansen & tuttle ENGINEERING INC.
BOX 487, CASTLE DALE, UTAH 84513 (435) 381-2523
FAX (435) 381-2522 email jt@etv.net

STATE of UTAH DFCM
PUBLIC SAFETY MOAB REGIONAL
TRUCK DRIVER TRAINING AREA
PAVING IMPROVEMENT PROJECT

PLAN SHEET 1

PROJECT NO.
05112550

SHEET NO.
4A

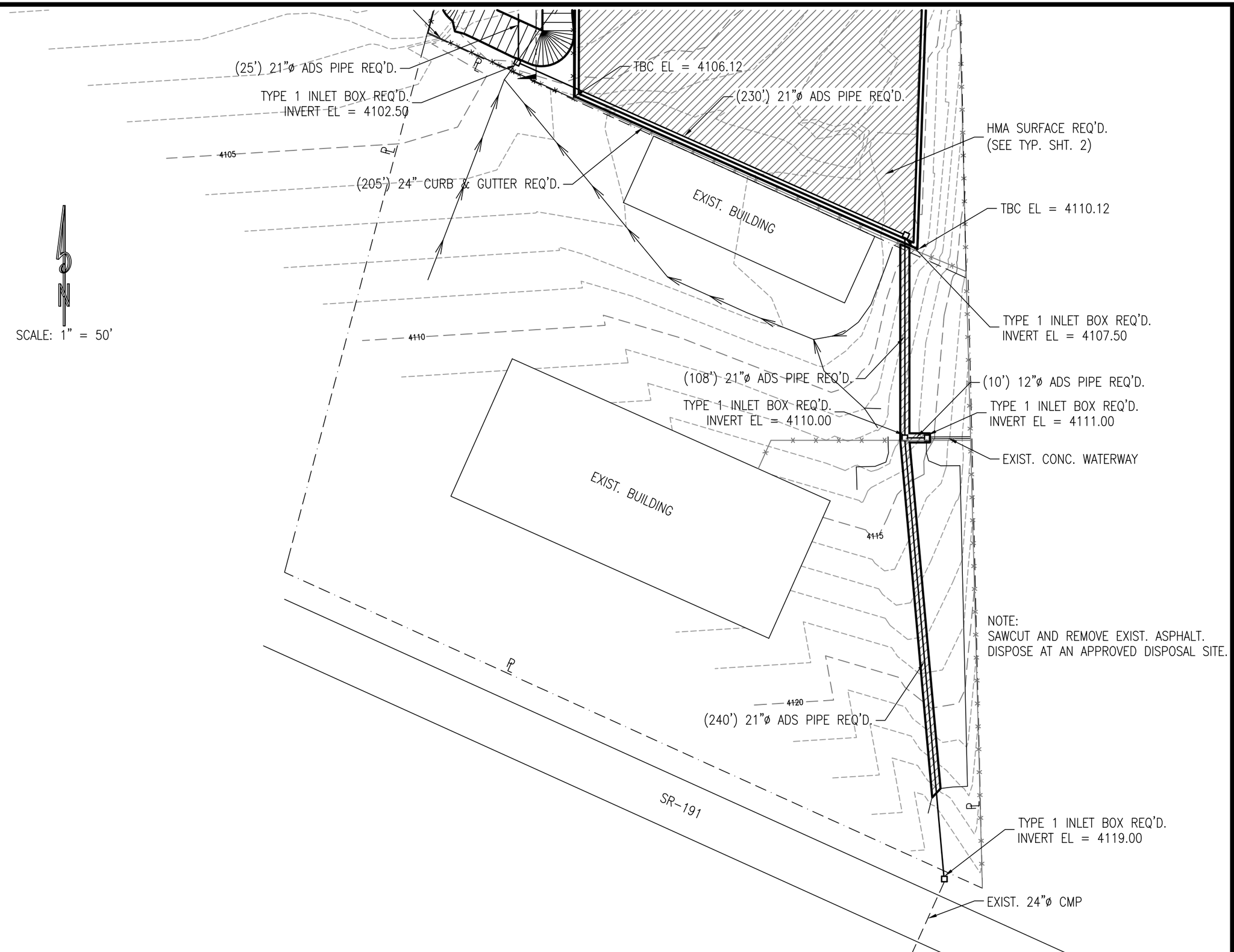

DESIGNED HRT	1-06	CHECKED CEJ	1-06
DRAWN KLB	1-06	CHECKED HRT	1-06
SURVEYED BHT	6-05	CHECKED LMS	6-05
R.O.W.		CHECKED	

johansen & tuttle ENGINEERING INC.
BOX 487, CASTLE DALE, UTAH 84513 (435) 381-2523
FAX (435) 381-2522 email jt@etv.net

STATE of UTAH DFCM
PUBLIC SAFETY MOAB REGIONAL
TRUCK DRIVER TRAINING AREA
PAVING IMPROVEMENT PROJECT

PLAN SHEET 2

PROJECT NO.
05112550

SHEET NO.
4B

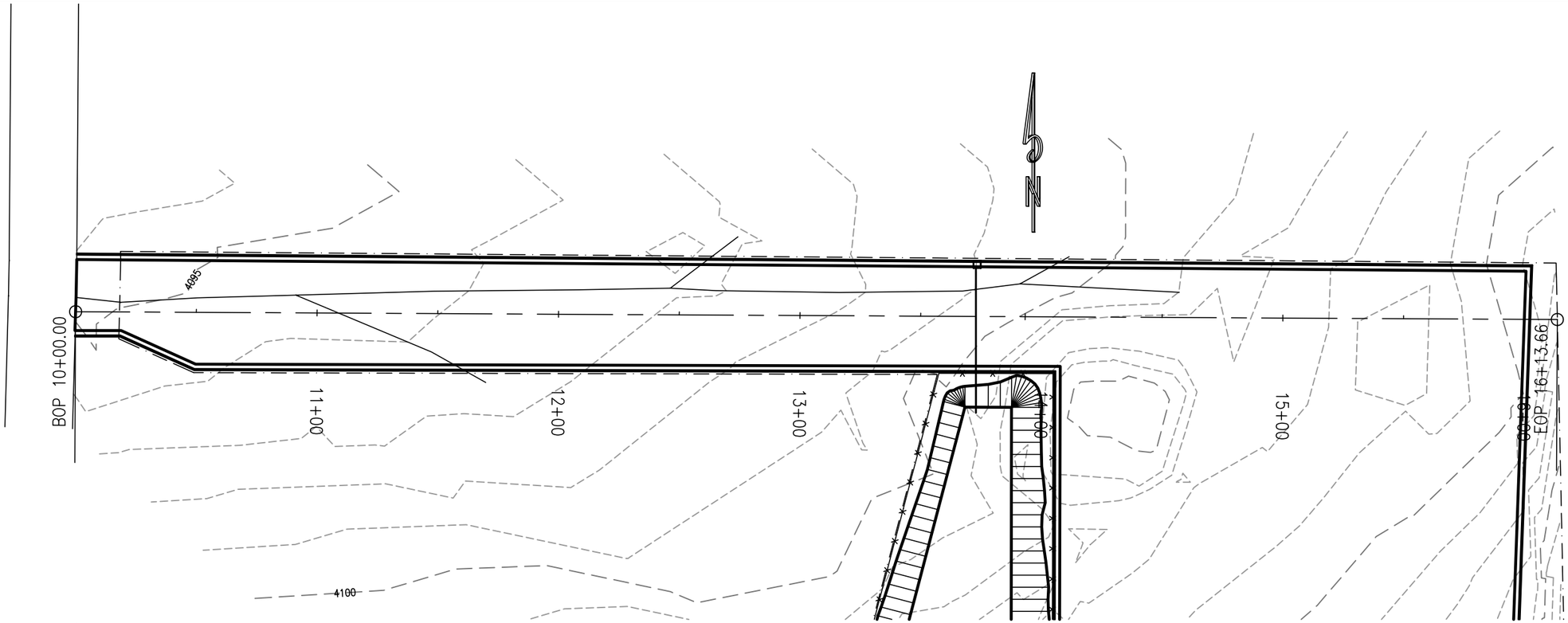

SCALES:
1" = 50' HOR
1" = 5' VER

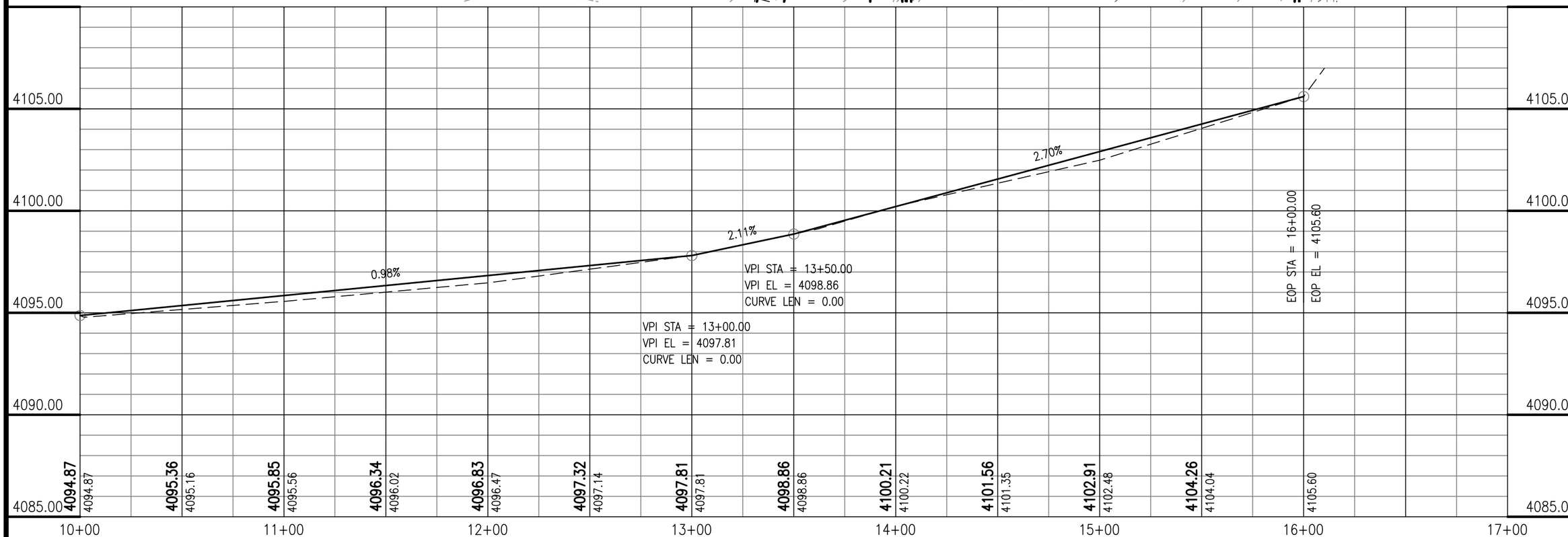

DESIGNED HRT	1-06	CHECKED CEJ	1-06
DRAWN KLB	1-06	CHECKED HRT	1-06
SURVEYED BHT	6-05	CHECKED LMS	6-05
R.O.W.		CHECKED	

johansen & tuttle ENGINEERING INC.
BOX 487, CASTLE DALE, UTAH 84513 (435) 381-2523
FAX (435) 381-2522 email jt@etv.net

STATE of UTAH DFCM
PUBLIC SAFETY MOAB REGIONAL
TRUCK DRIVER TRAINING AREA
PAVING IMPROVEMENT PROJECT

ACCESS ROAD
PLAN & PROFILE

PROJECT NO.
05112550

SHEET NO.
5