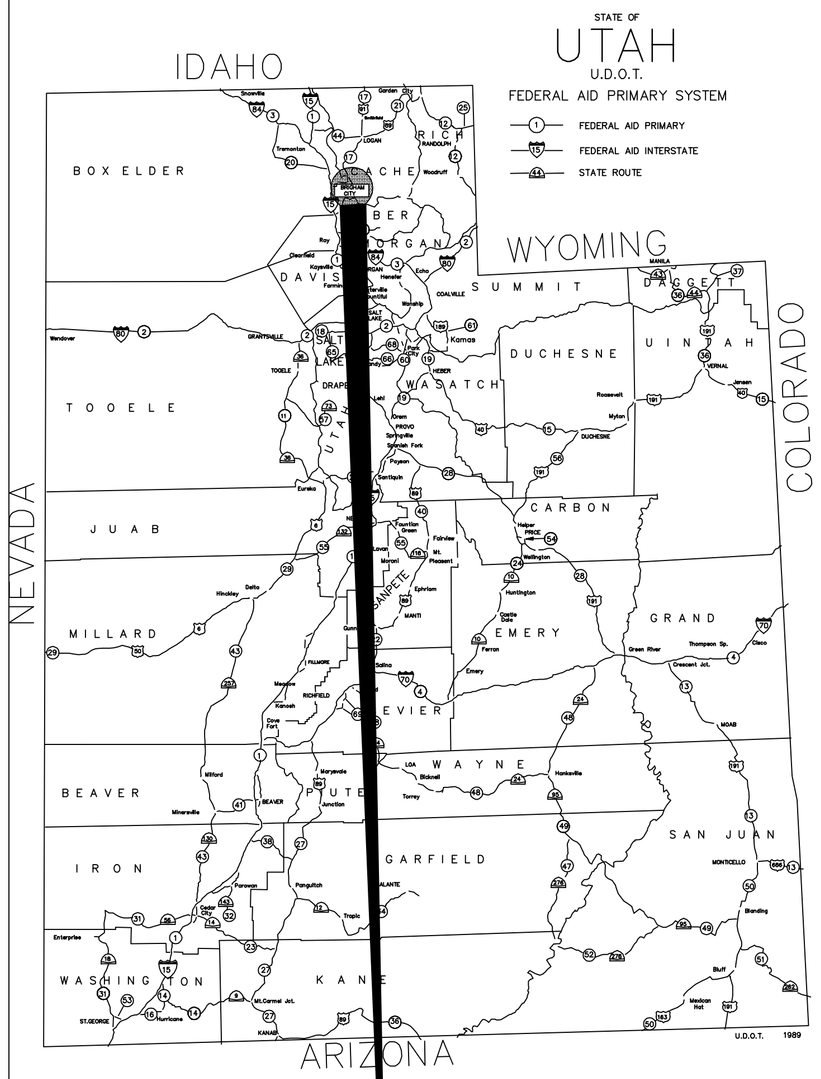

UDOT MAINTENANCE STATION #1423

BRIGHAM CITY, UTAH

DFCM PROJECT #05059900

CONSTRUCTION DOCUMENTS

FEBRUARY 15, 2006

N

LOCATION MAP N.T.S.

PREPARED BY

ARCHIPLEX GROUP
architecture • planning • design services
1135 South West Temple, Ste. A
Salt Lake City, UT 84101
P:(801) 961-7070
F:(801) 961-7373
Ralph Stanislaw

CONSULTANTS

STRUCTURAL
BHB Consulting Engineers
244 West 300 North
Suite 202
Salt Lake City, Utah 84103
Telephone: (801) 355-5656
Fax: (801) 355-5950
Chris L. Hofheins

MECHANICAL
PVE Inc.
90 South 400 West
Suite 340
Salt Lake City, UT 84101
Telephone: (801) 359-3158
Fax: (801) 521-4114
Alan Spendlove

ELECTRICAL
PVE Inc.
90 South 400 West
Suite 340
Salt Lake City, UT 84101
Telephone: (801) 359-3158
Fax: (801) 521-4114
Roger Riddle

CIVIL
JUB Engineering
40 W. Cache Valley Blvd.
Logan, UT 84341
Telephone: (435) 713-9514
Fax: (435) 713-9503
Zan Murray

CODE ANALYSIS

APPLICABLE CODES

	Year		Year
International Building Code	2003	National Electrical Code	2002
International Mechanical Code	2003	Uniform Code for Building Conservation	N.A.
International Plumbing Code	2003	ADA Accessibility Guildelines	2002
International Fire Code	2003		
International Energy Conservation Code	2003		

A. Occupancy and Group: S1 (MAINT. FAC.) B (OFFICE ACCESSORY) S2 (STORAGE INCIDENTAL) S2 (MEZZANINE)

Change in Use: Yes ____ No X Mixed Occupancy: Yes ____ No X

Special Use and Occupancy (e.g. High Rise, Covered Mall): N.A.

B. Seismic Design Category: D Design Wind Speed: 90 mph

C. Type of Construction (circle one):

I/A I/B II/A II/B III/A III/B IV/HT V/A (V/B)

D. Fire Resistance Rating Requirements for the Exterior Walls based on the fire separation distance (in hours):

North: 0 South: 0 East: 0 West: 0

E. Mixed Occupancies: NO Nonseparated Uses: NO

F: Sprinklers:

Required: NO Provided: NO Type of Sprinkler System: N.A.

G: Number of Stories: 1 Building Height: 26'-8"

H: Actual Area per Floor (square feet): 9856 SF

I: Tabular Area: 9000 SF

J: Area Modifications:

a) $A_a = A_t + \left[\frac{A_t\ I_f}{100}\right] + \left[\frac{A\ \ I_s}{100}\right]_t$ $\qquad I_f = 100\left[\frac{F}{P} - 0.25\right]\frac{W}{30}$

$$15750\ SF = 9000 + \left[\frac{9000\ (75)}{100}\right] + \left[\frac{9000\ (0)}{100}\right]$$

b) Sum of the Ratio Calculations for Mixed Occupancies:

$$\frac{\text{Actual Area}}{\text{Allowable Area}} \leq 1 \quad \frac{9856\ SF}{15750\ SF} = .625$$

c) Total Allowable Area for:

1) One Story: 15750 SF
2) Two Story: $A_a(2)$ N.A.
3) Three Story: $A_a(3)$ N.A.

d) Unlimited Area Building: Yes ____ No X Code Section: ____

K. Fire Resistance Rating Requirements for Building Elements (hours).

Element	Hours	Assembly Listing	Element	Hours	Assembly Listing
Exterior Bearing Walls	0	N.A.	Floors - Ceiling Floors	1	U.L. D902
Interior Bearing Walls	0	N.A.	Roofs - Ceiling Roofs	0	N.A.
Exterior Non-Bearing Walls	0	N.A.	Exterior Doors and Windows	0	N.A.
Structural Frame	0	N.A.	Shaft Enclosures	0	N.A.
Partitions - Permanent	0	N.A.	Fire Walls	0	N.A.
Fire Barriers	0	N.A.	Fire Partitions	1	I.B.C. 13-1.2
			Smoke Partitions	0	N.A.

L. Design Occupant Load: 15* *MAX. OCCUPANTS BASED ON UDOT STAFFING FOR 8 BAY FACILITY

Exit Width Required: 3" Exit Width Provided: 4'-0"

M. Minimum Number of Required Plumbing Facilities: *UNISEX

a) Water Closets - Required (m) 1* (f) 1* Provided (m) 1* (f) 1*
b) Lavatories - Required (m) 1* (f) 1* Provided (m) 1* (f) 1*
c) Bath Tubs or Showers: 1 (EMERGENCY EYEWASH)
d) Drinking Fountains: 1 Service Sinks: 1

FOOTNOTES:

1) In case of conflict with the U.S. Department of Justice Federal Registers Parts I through V - ADA Guidelines and specific reference to the International Building Code Accessibility Chapters, the more restrictive requirement shall govern.

2) Additional Code Information shall be provided at the discretion of the Building Official for Complex Buildings. Including, but not limited to:
   a) High Rise Requirements.
   b) Atriums.
   c) Performance Based Criteria.
   d) Means or Egress Analysis.
   e) Fire Assembly Locator Sheet.
   f) Exterior and Interior Accessibility Route.
   g) Fire Stopping, Including Tested Design Number.

CLIENT

BRIGHAM CITY
MAINTENANCE FACILITY
STATION #1423
1325 EAST HIGHWAY 90
BRIGHAM CITY, UTAH 84302

DESIGNER

ARCHIPLEX GROUP
architecture • planning • design services
1135 South West Temple, Ste. A
Salt Lake City, UT 84101
P:(801) 961-7070
F:(801) 961-7373

CONSULTANTS

PROFESSIONAL SEAL

STATE OF UTAH
RALPH M. STANISLAW
95-310818-0301
LICENSED ARCHITECT

ISSUE

MARK	DATE	DESCRIPTION
	2/15/06	CONSTRUCTION DOCUMENTS
	1/18/06	FINAL REVIEW SET
	12/21/05	DD REVIEW SET
	9/16/05	PRELIMINARY REVIEW SET

DFCM PROJECT NO:	05059900
ARCHIPLEX PROJECT NO:	050013.01
DRAWN BY:	K. PHILLIPS
CHECKED BY:	R. STANISLAW
SCALE:	NONE
DATE:	FEBRUARY 15, 2006

KEY PLAN

SHEET TITLE

COVER SHEET

G000

GENERAL NOTES

1. CONTRACTOR IS RESPONSIBLE FOR VERIFYING ALL DIMENSIONS AND CONDITIONS AT THE SITE BEFORE SUBMITTING A BID OR PROCEEDING WITH ANY PORTION OF THE WORK.
2. WHENEVER QUESTIONS ARISE OR CONDITIONS ARE ENCOUNTERED WHICH ARE NOT COVERED BY OR ARE IN CONFLICT WITH THE CONTRACT DOCUMENTS, CONSULT WITH THE ARCHITECT PRIOR TO TAKING ANY FURTHER ACTION.
3. ALL DIMENSIONS ARE TO FACE OF MASONRY OR FACE OF STUD, U.N.O.
4. DO NOT SCALE DRAWINGS FOR DIMENSIONS.
5. DIMENSIONS NOTED AS N.T.S. ARE TO BE FIELD VERIFIED.
6. ALL WOOD IN CONTACT WITH OR WITHIN 8" OF SOILS IS TO BE FIELD TREATED FOR MOISTURE, RODENT AND INSECT PROTECTION.
7. THE CONTRACTOR SHALL COORDINATE THE SEQUENCING OF WORK WITH THE OWNER AND ARCHITECT TO MEET THE OWNERS SCHEDULE.
8. CONTRACTOR SHALL LEAVE WORK AREAS BROOM CLEAN AND FREE OF TOOLS, EQUIPMENT, ETC., AT THE END OF EACH SHIFT. ALL CONSTRUCTION ACTIVITY SHALL BE CONTAINED WITHIN CONSTRUCTION BARRICADES OR FENCES. CONTRACTOR SHALL PROTECT OWNERS EXISTING CONSTRUCTION AND EQUIPMENT ADJACENT TO NEW CONSTRUCTION. CONTRACTOR SHALL CLEAN ALL SURFACES TO "LIKE NEW" CONDITION AT THE COMPLETION OF
9. PROVIDE WATER SUPPLY ROUGH-IN AND ELECTRICAL SUPPLY TO IRRIGATION CONTROLS. PROVIDE PVC SLEEVE UNDER PAVEMENTS AND WALKS
10. THE DESIGN OF THE PRE MANUFACTURED STRUCTURAL ROOF SYSTEM INCLUDING THE STEEL DECK, JOISTS, GIRDERS, COLUMNS AND THE LATERAL FORCE RESISTING SYSTEM (INCLUDING RIGID FRAMES) IS THE RESPONSIBILITY OF THE PRE MANUFACTURED METAL BUILDING SUPPLIER. FOOTINGS, STEEL COLUMNS, CONCRETE PIER SIZES & LOCATIONS SHOWN ARE AN ESTIMATE OF ACTUAL SIZES. ACTUAL SIZES WILL BE PROVIDE AFTER PREFABRICATED METAL BUILDER IS SELECTED. ALL BIDDERS SHALL PROVIDE UNIT PRICES FOR ADDING OR SUBTRACTING VOLUME OF CONCRETE, WEIGHT OF REINFORCING STEEL AND VOLUME OF EARTHWORK.

GRAPHIC SYMBOLS

EARTH	GRAVEL
SAND	CONCRETE
CONC. W/ FINISH	CAST STONE
TILE W/ BED	MARBLE
BRICK	GRANITE
CMU	STONE
LIMESTONE	PLYWOOD
WOOD (BLOCKING)	WOOD FINISH
WOOD FRAMING	ALUMINUM
STEEL	BATT INSULATION
RIGID INSULATION	ACOUSTICAL TILE
PLASTER	BACKER ROD AND FILLER
COMP. FILLER	GYPSUM BOARD
METAL LATH	FENCE

ARCHITECTURAL LEGEND

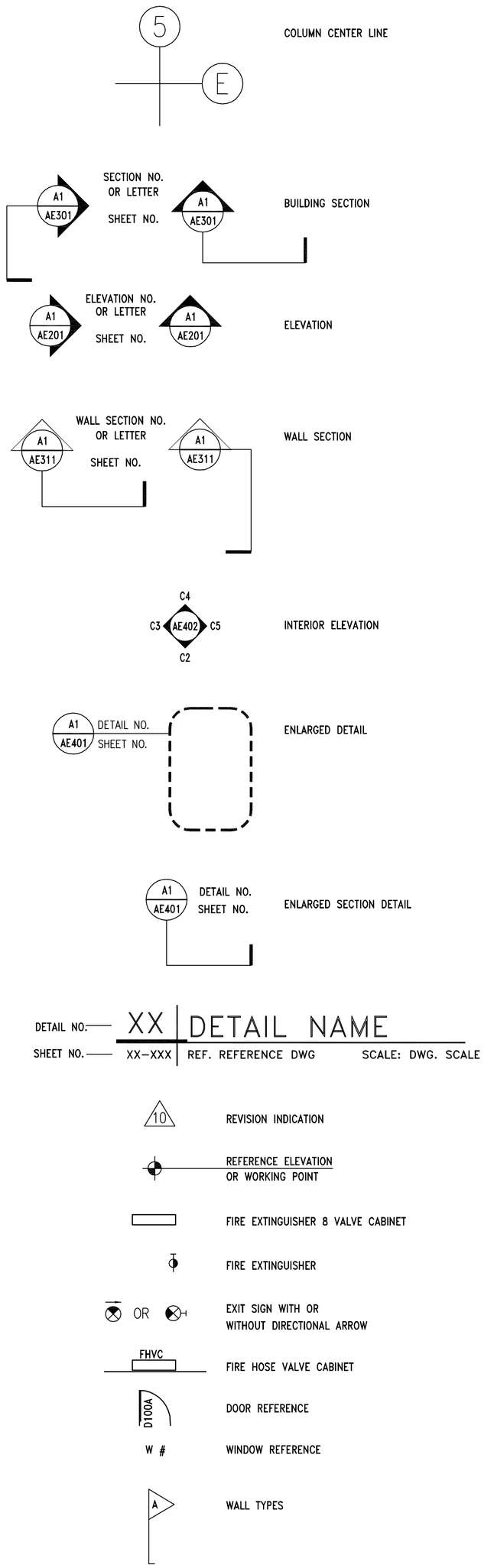

ABBREVIATIONS

ALT.	ALTERNATE
ALUM.	ALUMINUM
A.B.	ANCHOR BOLT
&	AND
ARCH.	ARCHITECTURAL
@	AT OR AT THE
BM.	BEAM
BLK.	BLOCK
BLKG.	BLOCKING
BD.	BOARD
BOT.	BOTTOM
BLDG.	BUILDING
CLKG.	CAULKING
C.I.	CAST IRON
CLG.	CEILING
CEM.	CEMENT
CTR.	CENTER
	CENTER LINE
CER.	CERAMIC
C.T.	CERAMIC TILE
CFCI	CONTRACTOR FURNISH, CONTRACTOR INSTALL
CFOI	CONTRACTOR FURNISH, OWNER INSTALLED
CLR.	CLEAR (...ANCE)
CLO.	CLOSET
COL.	COLUMN
CONC.	CONCRETE
CMU	CONCRETE MASONRY UNIT
CONN.	CONNECTION
CONSTR.	CONSTRUCTION
CONT.	CONTINUE/CONTINUOUS
CONTR.	CONTRACTOR
C.J.	CONTROL JOINT
CORR.	CORRIDOR
CNTR.	COUNTER
CTSK.	COUNTERSUNK
DET.	DETAIL
DIA.	DIAMETER
DIM.	DIMENSION
DN.	DOWN
D.S.	DOWNSPOUT
DWG.	DRAWING
D.F.	DRINKING FOUNTAIN
EA.	EACH
ELEC.	ELECTRIC (AL)
ELEV./EL.	ELEVATION
EQ.	EQUAL
EQUIP.	EQUIPMENT
EXP.	EXPANSION
EXT.	EXTERIOR
EW	EACH WAY
FIN.	FINISH
F.A.	FIRE ALARM
F.E.	FIRE EXTINGUISHER
F.E.C.	F.E. CABINET
FLR./FL.	FLOOR
F.D.	FLOOR DRAIN
FTG.	FOOTING
FDN.	FOUNDATION
GALV.	GALVANIZED
G.I.	GALVANIZED IRON
GA.	GAUGE
GL.	GLASS
GR.	GRADE
GND.	GROUND
GYP.	GYPSUM
GYP. BD.	GYPSUM BOARD
HDWR.	HARDWARE
HDWD.	HARDWOOD
HT.	HEIGHT
H.P.	HIGH POINT
HORIZ.	HORIZONTAL
H.B.	HOSE BIBB
HM	HOLLOW METAL
HR.	HOURS (FIRE RATING)
IN.	INCH
I.D.	INSIDE DIAMETER
INUSL.	INSULATION
INT.	INTERIOR
JAN.	JANITOR
JT.	JOINT
J-BOX	JUNCTION BOX
KIT.	KITCHEN
LAM.	LAMINATE
LAV.	LAVATORY
LT.	LIGHT
L.P.	LOW POINT
MAINT.	MAINTENANCE
MFR.	MANUFACTURER
M.O.	MASONRY OPENING
MAX.	MAXIMUM
MECH.	MECHANICAL
MEMB.	MEMBRANE
MEN	MEN'S TOILET
MTL./MET.	METAL
MIN.	MINIMUM
MIR.	MIRROR
MISC.	MISCELLANEOUS
MTD.	MOUNTED
MUL.	MULLION
NOM.	NOMINAL
N.	NORTH
N.I.C.	NOT IN CONTRACT
N.T.S.	NOT TO SCALE
NO. OR #	NUMBER
OFOI	OWNER FURNISH, OWNER INSTALL
OFCI	OWNER FURNISH, CONTRACTOR INSTALL
OFF.	OFFICE
O.C.	ON CENTER
OPNG.	OPENING
OPP.	OPPOSITE
OPP. H.	OPPOSITE HAND
O.D.	OUTSIDE DIAMETER
PTD.	PAINTED
PR.	PAIR
PART.	PARTITION
PED.	PEDESTRIAN
PLAS.	PLASTER
P. LAM.	PLASTIC LAMINATE
PL	PLATE
PM	PRESSED METAL
PLYWD.	PLYWOOD
PT.	POINT
Q.T.	QUARRY TILE
RAD.	RADIUS
R.W.L.	RAIN WATER LEADER
RE:	REFER TO
REFL.	REFLECTED
REINF.	REINFORCING
REQ.	REQUIRED
REV.	REVISED
R.	RISER
R.D.	ROOF DRAIN
RM.	ROOM
R.O.	ROUGH OPENING
SCHED.	SCHEDULE
SEAL.	SEALANT
SECT.	SECTION
S.SK.	SERVICE SINK
SHT.	SHEET
SIM.	SIMILAR
SL./SLP.	SLOPE
S.C.	SOLID CORE
SPEC.	SPECIFICATIONS
SQ.	SQUARE
STD.	STANDARD
STL.	STEEL
STOR.	STORAGE
STRUCT.	STRUCTURAL/STRUCTURE
SYM.	SYMMETRICAL
S.STL	STAINLESS STEEL
TEL.	TELEPHONE
TEMP.	TEMPORARY/TEMPERED
THK.	THICK (NESS)
T & G	TONGUE AND GROOVE
T/CONC.	TOP OF CONCRETE
T/CURB	TOP OF CURB
T.O.P.	TOP OF PLATE
T/WALL	TOP OF WALL
T.	TREAD
TYP.	TYPICAL
UNF.	UNFINISHED
U.N.O.	UNLESS NOTED OTHERWISE
VAR.	VARY OR VARIES
VERT.	VERTICAL
V.T.R.	VENT THROUGH ROOF
W/	WITH
WD.	WOOD
WP.	WATERPROOF
WSCT.	WAINSCOT
W/O	WITHOUT
W.P.	WORKING POINT
W.R.	WATER RESISTANT

INDEX OF DRAWINGS

G000	COVER SHEET
G001	DRAWING INDEX, LEGEND, GENERAL NOTES, GRAPHIC SYMBOLS AND ABBREVIATIONS
G002	MASTER KEYNOTE LIST

CIVIL

C001	CIVIL NOTES
C101	DEMOLITION PLAN
C102	SITE/STRIPING PLAN
C103	GRADING PLAN
C104	UTILITY PLAN
C501	CIVIL DETAILS

ARCHITECTURAL

AE101	FIRST FLOOR AND MEZZANINE PLANS
AE121	FIRST FLOOR AND MEZZANINE REFLECTED CEILING PLANS
AE141	ROOF PLAN
AE201	EXTERIOR ELEVATIONS
AE301	BUILDING SECTIONS
AE311	WALL SECTIONS
AE401	ENLARGED RESTROOM FLOOR PLAN, INT. ELEVTATIONS AND DETAILS
AE402	ENLARGED MAINTENANCE BAY AND INTERIOR ELEVATIONS
AE501	WALL TYPES AND MISC. DETAILS
AE502	SIGNAGE AND MISC. DETAILS
AE601	DOOR SCHEDULE AND DETAILS
AE602	WINDOW FRAME TYPES, GLAZING & FINISH SCHEDULES AND DETAILS

STRUCTURAL

S001	GENERAL STRUCTURAL NOTES
S101	FOOTING AND FOUNDATION PLAN
S501	FOOTING AND FOUNDATION DETAILS
S502	FOOTING AND FOUNDATION DETAILS
S601	STRUCTURAL SCHEDULES

MECHANICAL

M001	MECHANICAL SCHEDULE SHEET
M201	MECHANICAL FLOOR PLAN
M601	MECHANICAL DETAIL SHEET
M602	MECHANICAL DETAIL SHEET
M603	MECHANICAL DETAIL SHEET
P001	PLUMBING SCHEDULE SHEET
P201	PLUMBING FLOOR PLAN
P301	PLUMBING ENLARGEMENTS
P601	PLUMBING DETAIL SHEET
P602	PLUMBING DETAIL SHEET
P603	PLUMBING DETAIL SHEET

ELECTRICAL

E001	ELECTRICAL SCHEDULES AND NOTES
E100	ELECTRICAL SITE PLAN
E201	LIGHTING FLOOR PLAN
E301	POWER FLOOR PLAN

CLIENT

BRIGHAM CITY
MAINTENANCE FACILITY
STATION #1423
1325 EAST HIGHWAY 90
BRIGHAM CITY, UTAH 84302

DESIGNER

ARCHIPLEX GROUP
architecture · planning · design services
1135 South West Temple, Ste. A
Salt Lake City, UT 84101
P:(801) 961-7070
F:(801) 961-7373

CONSULTANTS

PROFESSIONAL SEAL

STATE OF UTAH
RALPH M. STANISLAW
95-310818-0301
LICENSED ARCHITECT

ISSUE

MARK	DATE	DESCRIPTION
	2/15/06	CONSTRUCTION DOCUMENTS
	1/18/06	FINAL REVIEW SET
	12/21/05	DD REVIEW SET
	9/16/05	PRELIMINARY REVIEW SET

DFCM PROJECT NO:	05059900
ARCHIPLEX PROJECT NO:	050013.01
DRAWN BY:	K. PHILLIPS
CHECKED BY:	R. STANISLAW
SCALE:	NONE
DATE:	FEBRUARY 15, 2006

KEY PLAN

SHEET TITLE

GENERAL NOTES, ABBREVIATIONS, SYMBOLS, LEGEND & SHEET INDEX

G001

MASTER KEYNOTE LIST – (APPLIES TO ARCHITECTURAL DRAWINGS ONLY)

DIVISION 1 GENERAL REQUIREMENTS

DIVISION 2 SITEWORK

02000 EARTHWORK

02000.A0 COMPACTED FILL
02000.B0 GRAVEL BASE
02000.C0 SAND

02740 ASPHALTIC CONCRETE PAVING

02740.A0 ASPHALTIC CONCRETE PAVING

DIVISION 3 CONCRETE

03053 CONCRETE W/WATER PROOFING SYSTEM

03053.A0 CONCRETE WATER PROOFING SYSTEM (BASE BID) (ALT #1) (ALT #2)

03300 CAST-IN-PLACE CONCRETE

03300.A0 CONCRETE – SLAB ON GRADE
03300.A1 CONCRETE SLAB-ON-GRADE – RE: STRUCTURAL
03300.A2 CONCRETE SLAB-ON-GRADE (THICKNESS)
03300.B1 CONCRETE SLAB – RE:STRUCTURAL
03300.B2 CONCRETE SLAB (THICKNESS)
03300.C0 FOOTING
03300.C1 FOOTING – RE: STRUCTURAL
03300.D0 CONCRETE PAD
03300.E0 RETAINING WALL
03300.F0 CAST-IN-PLACE REINFORCED CONCRETE
03300.F1 CAST-IN-PLACE REINFORCED CONCRETE, WITH ARCHITECTURAL FINISH

03300.G0 CONCRETE OVER METAL DECK – RE:STRUCTURAL
03300.H0 FOUNDATION WALL, RE: STRUCTURAL
03300.H1 CONCRETE PIER, RE: STRUCTURAL
03300.I2 CAST-IN-PLACE REINFORCED CONCRETE, W/INTEGRAL CONCRETE WATERPROOFING SYSTEM
03300.J0 REINFORCING
03300.J1 REINFORCING – RE: STRUCTURAL
03300.J2 #4 BARS CONTINUOUS (QUANTITY)
03300.J3 #5 BARS CONTINUOUS (QUANTITY)
03300.K1 18" DIA. CONCRETE PIPE BASE
03300.L1 30# FELT
03300.M1 MOISTURE BARRIER
03300.N0 CONCRETE CURB
03300.P3 CONTROL JOINT RE: STRUCTURAL
03300.P4 CONSTRUCTION JOINT
03300.P6 CHAMFER JOINT
03300.P7 SAWCUT CONSTRUCTION JOINT, TYP.
03300.S1 SPLASH BLOCK
03300.S2 CONCRETE SWALE

DIVISION 5 METALS

05310 STEEL DECK

05310.A1 METAL DECK – RE: STRUCTURAL

05400 COLD-FORMED METAL FRAMING

05400.X1 STEEL STUD
05400.X2 STEEL TRACK
05400.X3 STEEL JOIST – RE:STRUCTURAL

05500 METAL FABRICATIONS

05500.A1 ANGLE – RE: STRUCTURAL
05500.A2 STEEL ANGLE (SIZE) – GALVANIZED
05500.B0 CLIP ANGLE
05500.B2 CLIP ANGLE (SIZE)
05500.D0 CHANNEL (SIZE)
05500.D1 CHANNEL – RE: STRUCTURAL
05500.D2 HAT CHANNEL (SIZE)
05500.E0 PLATE (SIZE)
05500.E1 PLATE – RE: STRUCTURAL
05500.E2 PLATE (SIZE) – GALVANIZED
05500.J1 PIPE BOLLARD (DIAMETER) – GALV. & PAINTED
05500.M1 CHECKERED PLATE (SIZE) GALVANIZED
05500.P0 ANCHOR BOLT(S)
05500.P1 ANCHOR BOLTS (DIAMETER, SPACING)
05500.V0 FLOOR PLATE
05500.X1 STEEL STUD (RE:STRUCTURAL)
05500.X2 STEEL RUNNER (RE:STRUCTURAL)
05500.Y0 ROUGH HARDWARE – GALVANIZED
05500.Z0 CHAIN – GALVANIZED
05500.Z1 STEEL CLIP RING – GALVANIZED
05500.Z2 RING FOR CHAIN ATTACHMENT – GALVANIZED

05510 METAL STAIRS

05510.A1 LADDER RUNGS
05510.B0 LADDER RAILS
05510.C0 LADDER MOUNTING BRACKET
05510.D1 RUBBER SHOE AT BOTTOM OF EACH RAIL
05510.E1 1 1/2" O.D. HANDRAILING
05510.F0 STEEL STRINGER – (SIZE)
05510.F1 STEEL STRINGER – (SIZE) – GALVANIZED

05521 PIPE & TUBE RAILINGS

05521.A1 1 1/2" O.D. STEEL GUARDRAIL
05521.A2 PIPE GUARDRAIL (DIAMETER) – GALVANIZED & PAINTED
05521.B1 1 1/2" O.D. HANDRAIL
05521.B2 PIPE HANDRAIL (DIAMETER) – GALVANIZED & PAINTED

05530 GRATINGS

05530.A0 TRENCH FRAME – GALVANIZED
05530.A1 STEEL GRATE 22-W-4 (SIZE) GALVANIZED
05530.B0 ALUMINUM BAR PANELS
05530.C1 METAL GRATE PANEL – GALV.
05530.C2 METAL GRATE TREAD – GALV.

DIVISION 6 WOOD AND PLASTICS

06105 MISCELLANEOUS CARPENTRY

06105.L2 BLOCKING AS REQUIRED
06105.P1 2X4
06105.P2 2X6
06105.P6 4X4
06105.P9 2 x FRAMING, FIRE TREATED
06105.P10 PRESSURE TREATED WOOD TIMBER (SIZE)
06105.Q2 SHIM AS REQUIRED
06105.R2 SHEATHING – PLYWOOD (THICKNESS) GRADE (SIZE)
06105.R3 G1S A/C PLYWOOD (THICKNESS)
06105.V1 EXTERIOR GRADE PLYWOOD (THICKNESS)
06105.V6 PEGBOARD (THICKNESS)
06105.Z0 ANCHOR AS REQUIRED

06402 INTERIOR ARCHITECTURAL WOODWORK

06402.A0 SILL
06402.A1 3/4" PAINTED WOOD SILL
06402.B1 PLASTIC LAMINATE BACKSPLASH (HEIGHT)
06402.C1 PAINT GRADE WOOD CAP (THICK)
06402.H0 SHELF(VES)
06402.H1 ADJUSTABALE SHELVES
06402.H2 SHELVING (DEPTH)
06402.K0 BASE UNIT (FINISH)
06402.K2 BASE UNIT W/ADJ. SHELF(VES) (FINISH)
06402.K3 BASE UNIT W/DRAWERS (FINISH)
06402.K4 BASE UNIT W/DRAWER & ADJ. SHELF(VES) (FINISH)
06402.L2 WALL UNIT W/ADJ. SHELF(VES) (FINISH)
06402.P0 COUNTERTOP
06402.P2 COUNTERTOP – P. LAM. ON 3/4" PLYWOOD
06402.X0 WORKBENCH

DIVISION 7 THERMAL AND MOISTURE PROTECTION

07901 JOINT SEALANTS

07901.A0 SEALANT
07901.B0 ASPHALT SATURATED FIBERBOARD
07901.C0 CAULK
07901.D0 JOINT FILLER
07901.G0 BACKER ROD

DIVISION 8 DOORS AND WINDOWS

08111 STANDARD STEEL DOORS AND FRAMES

08111.A0 PRESSED METAL FRAME
08111.A1 GROUT-FILLED PRESSED METAL FRAME
08111.B0 HOLLOW METAL DOOR
08111.C0 JAMB ANCHOR

08360 SECTIONAL OVERHEAD DOORS

08360.A0 OVERHEAD SECTIONAL DOOR
08360.B0 DOOR TRACK
08360.C0 WEATHERSTRIPPING
08360.D0 DOOR GUIDE

08520 ALUMINUM WINDOWS

08520.A0 WINDOW UNIT
08520.B0 FIXED WINDOW
08520.C0 ALUM. WINDOW W/SLIDING GLASS PANEL
08520.M0 SILL STARTER, SET IN SEALANT
08520.P0 BREAKMETAL
08520.Q0 WEATHERSTRIPPING
08520.R0 ALUMINUM FLASHING, FINISH TO MATCH WINDOW FRAME

08521 HORIZONTAL SLIDING VINYL (PVC) WINDOWS

08521.B0 FIXED VINYL WINDOW
08521.C0 VINYL WINDOW W/SLIDING GLASS PANEL

08710 DOOR HARDWARE

08710.A0 THRESHOLD
08710.B0 DOOR SWEEP
08710.C0 WEATHERSTRIPPING

08800 GLAZING

08800.C0 WIRE GLASS
08800.G1 CLEAR INSULATING GLASS (SIZE)
08800.G3 OPAGUE INSULATING GLASS

DIVISION 9 FINISHES

09255 GYPSUM BOARD ASSEMBLIES

09255.A1 GYPSUM BOARD (THICKNESS)
09255.A2 WATER RESISTANT GYPSUM BOARD (THICKNESS)
09255.B2 TYPE 'X' GYPSUM BOARD (THICKNESS)
09255.C3 CEMENT BOARD (THICKNESS)
09255.H0 METAL STUD
09255.H1 METAL STUDS (SIZE, SPACING)
09255.J0 METAL RUNNER
09255.K0 DOUBLE STUDS
09255.K1 DOUBLE STUDS (GAGE)
09255.L1 7/8" X 1-3/8" METAL ANGLE
09255.L2 2-1/2" X 2-1/2" METAL ANGLE
09255.M2 METAL CORNER BEAD (TYP)
09255.P0 Z-FURRING CHANNEL
09255.Q0 7/8" METAL FURRING CHANNEL
09255.R2 CHANNEL (SIZE, SPACING)
09255.S1 8 GA. WIRE HANGERS (SPACING)
09255.S2 18 GA. WIRE TIES
09255.S3 18 GA. METAL MOUNTING STRIPS
09255.S4 14 GA. STAINLESS STEEL COUNTER TOP
09255.U1 SUSPENDED CEILING SYSTEM
09255.V0 EDGE TRIM (TYP)
09255.V2 LC-BEAD (PREFERRED USG 200-A TRIM)
09255.V4 VINYL TRIM

09300 TILE

09300.A1 TILE UNGLAZED CERAMIC MOSAIC-TILE TYPE#1
09300.A2 TILE GLAZED WALL-TILE TYPE#2
09300.C0 TILE BASE
09300.D1 BULLNOSE TRIM UNIT
09300.G1 MORTAR BED
09300.G4 WATERPROOF MEMBRANE

09660 RESILIENT TILE FLOORING

09660.A1 VINYL COMPOSITION TILE TYPE #1

09678 RESILIENT WALL BASE AND ACCESSORIES

09678.E1 RUBBER BASE (SIZE)

09900 PAINTING

09900.A1 PAINT – TYPE #1
09900.A2 PAINT – TYPE #2
09900.A3 PAINT – TYPE #3

DIVISION 10 SPECIALTIES

10100 VISUAL DISPLAY BOARDS

10100.C0 MARKER BOARD
10100.D0 TACK BOARD

10425 SIGNS

10425.A0 SIGNAGE
10425.A1 OIL SIGNAGE
10425.B1 WELDING SIGNAGE
10425.C1 ACCESSIBLE SIGNAGE
10425.D1 ACCESSIBLE/UNISEX RESTROOM SIGNAGE

10500 METAL LOCKERS AND STORAGE CABINETS

10500.A0 METAL LOCKERS
10500.B0 METAL STORAGE CABINETS

10522 FIRE EXTINGUISHERS, CABINETS, AND ACCESSORIES

10522.A0 FIRE EXTINGUISHER

10800 TOILET AND BATH ACCESSORIES

10800.B0 PAPER TOWEL DISPENSER & WASTE RECEPTACLE
10800.B1 SEMI-RECESSED PAPER TOWEL DISPENSER & WASTE RECEPTACLE
10800.C0 TOILET TISSUE DISPENSER
10800.C1 RECESSED TOILET TISSUE DISPENSER/SAN. NAP. DISPOSAL
10800.D0 MOP RACK
10800.E0 GRAB BAR
10800.E1 GRAB BAR (SHOWER)
10800.F0 ROBE HOOK
10800.F1 DOUBLE PRONG ROBE HOOK
10800.H0 SOAP DISPENSER
10800.H1 SOAP DISH
10800.P1 SHOWER CURTAIN ROD
10800.P2 SHOWER CURTAIN
10800.R1 FRAMED MIRROR (SIZE)
10800.T1 FOLDING SHOWER SEAT
10800.T0 METAL SHELF (SIZE)

DIVISION 12 FURNISHINGS

12511 HORIZONTAL LOUVER BLINDS

12511.A0 HORIZONTAL LOUVER BLINDS

DIVISION 13 SPECIAL CONSTRUCTION

13125 METAL ARCH BUILDING SYSTEM

13125.A0 METAL ARCH BUILDING SYSTEM
13125.B0 STANDING SEAM METAL ROOF
13125.B1 STANDING SEAM METAL ROOF RIDGE
13125.B2 STANDING SEAM METAL CANOPY
13125.C0 METAL RAIN GUTTER W/DOWNSPOUTS
13125.C1 METAL RAIN GUTTER
13125.C2 DOWNSPOUT
13125.C3 GUTTER STRAP, INSTALL AT EVERY OTHER PANEL RIB
13125.D0 METAL FLASHING
13125.D1 METAL DRIP FLASHING
13125.D2 METAL HEAD FLASHING
13125.D3 METAL SILL FLASHING
13125.D4 METAL FLASHING, FINISH TO MATCH ROOF PANELS
13125.D5 RIDGE FLASHING, TO MATCH ROOF PANELS
13125.D6 DOOR HEAD FLASHING
13125.D7 JAMB FLASHING
13125.E0 METAL TRIM
13125.E1 JAMB TRIM
13125.E2 PANEL TRIM
13125.E3 RAKE TRIM
13125.E4 RAKE SLIDE
13125.E5 METAL EAVE CLOSURE
13125.E6 WALL CLOSURE
13125.E7 METAL OUTSIDE CLOSURE
13125.E8 CORNER TRIM
13125.E9 FRAMED OPENING HEADER
13125.F0 METAL WALL PANEL
13125.F1 METAL WALL FASTENER
13125.F2 BLIND RIVET
13125.F3 POP RIVET
13125.G0 STANDING SEAM METAL FACIA
13125.H0 BREAK METAL
13125.H1 METAL ANGLE
13125.H2 HIGH RAKE SUPPORT ANGLE
13125.H3 RAKE ANGLE
13125.H4 4" x 4" CONT. ANGLE
13125.H5 BACKUP PLATE ANGLE
13125.H6 EAVE SUPPORT ANGLE
13125.H7 EAVE STRUT
13125.J0 STRUCTURAL MEMBER
13125.J1 STRUCTURAL GIRT
13125.J2 PURLIN
13125.K0 CLIP
13125.K1 LOW PANEL CLIP
13125.L1 STEEL COLUMN – PAINTED
13125.L2 STEEL COLUMN – GALV. – PAINTED
13125.M1 STEEL BEAM – PAINTED
13125.M2 STEEL BEAM – GALV. – PAINTED
13125.N1 ANCHOR
13125.N2 FASTENER (SPACING)
13125.P1 DOUBLE BEAD TAPE SEALER
13125.P2 SEALANT
13125.P3 THERMAL BREAK
13125.Q0 METAL VENT
13125.Q1 VENT MATERIAL
13125.R0 INSULATION & VAPOR BARRIER (R-VALUE)

DIVISION 14 CONVEYING SYSTEMS

14620 TROLLEY HOIST

14620.A0 TROLLEY HOIST (SIZE) – RE: STRUCTURAL

DIVISION 15 EQUIPMENT

15000 MECHANICAL

15050.A1 MECH. PENETRATIONS
15251.A1 PIPE INSULATION AT ALL EXPOSED PIPE
15410.A0 URINAL
15410.A1 URINAL, ACCESSIBLE
15410.B0 SINK FAUCET
15410.B1 SINK FAUCET W/ADA LEVER HANDLES
15410.C0 UTILITY SINK
15410.D1 FLOOR SINK
15410.E0 TRENCH DRAIN
15410.E1 DRAIN W/ SEDIMENT BUCKET
15410.E2 FLOOR DRAIN
15410.F0 TOILET
15412.A0 EMERGENCY SHWR & EYE WASH
15452.A1 DRINKING FOUNTAIN
15460.A1 GAS FIRED WATER HEATER
15491.A0 AIR COMPRESSOR
15491.C0 OVERHEAD HOSE REEL
15600.A0 NATURAL GAS RADIANT HEATING SYSTEM
15611.A1 PROPANE FIRED FURNACE
15838.A0 EXHAUST FAN
15887.A1 LOUVER W/ BIRD SCREEN

DIVISION 16 ELECTRICAL

16000 GENERAL ELECTRICAL

16000.A0 INTERIOR LIGHTS
16000.B0 INTERIOR WALL LIGHTS
16000.C0 EXTERIOR LIGHTS
16000.C1 EXTERIOR LIGHTS IN CANOPY
16000.C2 EXTERIOR WALL MOUNTED LIGHTS
16000.C3 EXTERIOR WALL MOUNTED FLOOD LIGHTS
16000.D1 ELECTRICAL PANEL
16000.E1 TELEPHONE BOARD

CLIENT

BRIGHAM CITY
MAINTENANCE FACILITY
STATION #1423
1325 EAST HIGHWAY 90
BRIGHAM CITY, UTAH 84302

DESIGNER

ARCHIPLEX GROUP
architecture · planning · design services
1135 South West Temple, Ste. A
Salt Lake City, UT 84101
P:(801) 961-7070
F:(801) 961-7373

CONSULTANTS

PROFESSIONAL SEAL

STATE OF UTAH
RALPH M. STANISLAW
95-310818-0301
LICENSED ARCHITECT

ISSUE

MARK	DATE	DESCRIPTION
	2/15/06	CONSTRUCTION DOCUMENTS
	1/18/06	FINAL REVIEW SET
	12/21/05	DD REVIEW SET
	9/16/05	PRELIMINARY REVIEW SET

DFCM PROJECT NO:	05059900
ARCHIPLEX PROJECT NO:	050013.01
DRAWN BY:	K. PHILLIPS
CHECKED BY:	R. STANISLAW
SCALE:	NONE
DATE:	FEBRUARY 15, 2006

KEY PLAN

SHEET TITLE

MASTER KEYNOTE LIST

G002

GENERAL NOTES:

1. Utah Department of Transportation, DFCM and the Architect have jurisdiction over this project. Contractor shall obtain all necessary permits and business licenses prior to construction. Permits shall include, but not be limited to water, sewer, curb & gutter, storm water and grading.
2. Contractor is responsible for dust abatement and any liability issues related to dust at any location which may be caused by this project.
3. The Contractor is responsible for traffic control and protection of pedestrians in and around this work. Reference the manual on uniform traffic control devices (MUTCD latest edition for work zone traffic control). Warning and/or danger signs shall be required. Such flagmen or personnel as is necessary shall be readily available, especially when loaded or unloaded trucks- equipment are ingressing or egressing onto the job site. The contractor shall use the suggested traffic control plan, if included in plans, or submit a plan of his/her own for approval by the Engineer and/or the Owner and other regulator agencies.
4. Any work done within a public right-of-way shall be coordinated with the appropriate transportation agency and shall meet the requirements of that agency and, in particular, requirements of any right-of-way special use permit, or other permit. All work shall meet current OSHA requirements.
5. Where work is performed on easements, the contractor shall take every precaution to eliminate any adverse effects on the adjacent property and/or to restore it to its original condition.
6. All distances and data shall be checked by the contractor prior to the start of construction. In case of conflict the engineer shall be notified immediately so that clarification may be made prior to the start of the work.
7. The contractor shall be responsible for disposal and fees of all materials removed or demolished on site.
8. The Contractor shall arrange for, secure and pay for directly, any and all temporary utility supplies it may require for prosecution of its work. The cost of such utilities shall be included in the appropriate bid item with which it is associated.
9. Should construction be halted because of inclement weather conditions, the Contractor will completely clean up all areas and maintain the surface in good condition during the shut-down period. No excavation in paved streets will be allowed if weather conditions do not permit repaving of the pipeline trench.
10. The Contractor's personnel, equipment, and operations shall comply fully with all applicable standards, regulations, and requirements of existing Federal, Utah State, and Local governmental agencies.
11. No person shall be cut off from access to his residence or place of business for a period exceeding eight (8) hours, unless the Contractor has made special arrangements with the affected persons prior to commencing work in the area.
12. The Contractor shall preserve existing City, County, State, and Federal land monuments whenever possible. If a monument must be moved the engineer shall be contacted 2 weeks prior to removal to arrange for relocation.
13. The Contractor shall be responsible for obtaining all local, State, and Federal permits required for stormwater pollution prevention as a result of construction activities. When called for in the Contract Documents, the Contractor shall prepare a Stormwater Pollution Prevention Plan for approval by the Engineer. If the construction will disturb more than one acre, the Contractor shall obtain a copy of the U.S. Environmental Protection Agency's NPDES General Permit for Storm Water Discharges Associated with Construction Activity (otherwise known as the Construction General Permit or CGP) and submit a "Notice of Intent" (NOI)[EPA Form 3510-9 (6/03)] for permit coverage under the General Permit. The CGP may be found on the Internet at <http://www.epa.gov/npdes/stormwater/cgp> or by contacting the U.S. EPA Office of Water directly at (800) 424-4372. The NOI may be filed electronically at the following website: <http://cfpub.epa.gov/npdes/stormwater/enoi.cfm>. The CGP does not relieve the Contractor from compliance with other regulations or contract requirements regarding stormwater pollution prevention including but not limited to: protection of surface waters, prevention of soil runoff into drains, dust control, prevention of tracking soils to adjacent streets, fuel containment, spill control, etc.

EXISTING UTILITES

1. Approximate locations of utilities are shown on the plans. They are to be used for general information only. It is the responsibility of the contractor to notify the appropriate utility companies when construction might interfere with normal operation of any utilities. It shall also be the contractor's responsibility to have the appropriate utility company field-locate any utility installations which might be affected by construction prior to beginning work in that area. The contractor shall be responsible for maintaining service of existing utilities and for restoring any utilities damaged due to construction at no additional cost to the owner. Depths and elevations of utilities are unknown unless otherwise shown. Contractor shall field verify utility depths, elevations, any discrepancies and/or conflicts shall be brought to the attention of the Engineer immediately.

INSPECTIONS AND TESTING

1. The Owner shall be responsible for all materials testing including but not limited to concrete, asphalt, compaction, sewer and water. All tests shall meet minimum Engineer requirements. See the contract documents and drawings for frequency of testing. Results are to be delivered to Special Inspector, Owner and Architect.
2. Pressure, deflection and other tests relating to pipeline installation shall be paid for and performed by the Contractor.
3. The Contractor is responsible to coordinate with Architect and Special Inspector for inspections of work at appropriate intervals. It shall be the Contractor's responsibility to pay for additional inspections that are the result of his workmanship.
4. The Contractor is responsible for sewage & drainage tests.

TRENCH EXCAVATION AND BACKFILL - Unless noted otherwise in the Project Specifications, these requirements apply.

1. Barriers shall be placed at each end of all excavations and at such places as may be necessary along excavations to warn all pedestrians and vehicular traffic of such excavations. Lights shall also be placed along excavations from one hour before sunset each day to one hour after sunrise of the next day until such excavations are entirely refilled, compacted, and surfaced or final graded. All excavations shall be barricaded in such a manner as to prevent persons from falling, walking, or otherwise entering any excavation in any street, roadway, parking lot, treatment plant or any other area, public or private.
2. Excavations shall be sheeted, braced, and shored as required to support the walls of the excavations, to eliminate sliding and settling and as may be required to protect the workmen, the work in progress, and existing utilities, structures and improvements. All such sheeting, bracing, and shoring shall comply with the requirements of the Utah State Industrial Commission, Occupational Safety and Health Act (OSHA), and accident prevention and safety provisions of the contract.
3. All trenches shall be kept free from water during excavation, fine grading, pipe laying and jointing, and pipe embedment operations.
4. No sanitary sewer shall be used for disposal of trench water. Surface water shall be prevented from entering trenches.
5. All backfill and compaction shall be completed within a maximum distance of 200 feet behind the end of newly installed pipe.
6. Excavation shall be not more that 200 feet ahead of the newly installed pipe. The Contractor shall restore the asphalt surface where the utilities cross existing asphalt.
7. The minimum clear trench width at the horizontal diameter of the pipe must not be less than the outside diameter of the pipe plus twelve-inches (12").
8. Gradation. Imported granular material shall conform to the following gradation specifications:

Granular Foundation Material:

One hundred percent passing a one-inch screen and five percent passing a one/half-inch screen.

Granular Bedding Material:

Ductile iron or concrete pipe - One hundred percent (100%) passing a one-inch screen and five percent passing a No. 4 sieve.

PVC pipe - One hundred percent passing a three/quarter-inch screen and five percent passing a No. 4 sieve.

Copper tubing/PE pipe - One hundred percent passing a No. 4 sieve and eight percent passing a No. 200 sieve.

Granular Backfill material:

One hundred percent passing a three-inch square sieve and fifteen percent passing a No. 200 mesh sieve.

9. Under pavements or other surface improvements the in-place density shall be a minimum of ninety-six percent (96%) of laboratory standard maximum dry density as determined by AASHTO T-99. In shoulders and other areas the in-place density shall be a minimum of ninety percent (90%) of the maximum dry density as determined by AASHTO T-99. The backfill in the trenches shall be either compacted or consolidated according to the requirements of the materials being placed.
10. Where compaction methods are used, the material shall be placed at a moisture content and un-compacted lift thickness such that after compaction the required relative densities will be produced. In no event will the material be placed in lifts which, prior to compaction, exceed eight inches (8").

PIPE-GENERAL

1. All pipe lines are to be located as shown on the plans unless relocated in the field by the Engineer to avoid unforeseen utility interference.
2. Minimum clearance between new pipelines and existing utilities and structures (except sewers) shall be two feet horizontally.
3. Contractor shall provide all necessary fittings, hardware, labor, etc. To construct vertical and horizontal bends in pipe as needed to meet the required grade, alignment, and cover requirements.
4. For connections to existing sewer lines, contractor shall field verify all pipe diameters, pipe materials, and appurtances for confirmation of the required fittings prior to ordering fittings.
5. Dimensions to pipelines are to centerline unless otherwise noted.
6. Distances shown along pipelines are horizontal distances and not pipe length.
7. Wherever the subgrade material does not afford a sufficiently solid foundation to support the pipe and superimposed load, or where groundwater must be drained, the subgrade shall be excavated to such depth as may be necessary and replaced with Gravel Foundation Material.
8. All pipe shall be protected from lateral displacement and possible damage resulting from impact or unbalanced loading during backfilling operations by being adequately bedded.
9. Where applicable, bell holes shall be excavated so that only the barrel of the pipe receives bearing from the trench bottom.
10. In the event trench materials are not satisfactory for pipe bedding, modified bedding will be required. Modified bedding shall consist of placing compacted granular material on each side of and to the level of twelve-inches (12") above the top of the pipe.

PIPE FITTINGS

1. All pipe fittings shall conform to AWWA standards.
2. All buried valves shall be installed complete with two-piece, cast iron, screw type, 5-1/4-inch shaft valve box with lid. The lid shall have the word "Water" cast in the metal.
3. All valve boxes in paved areas shall contain a concrete 6" thick concrete collar 24 inches larger in diameter than the valve box. This collar shall contain (1) #4 rebar at the center of the collar.

PRESSURE PIPE

1. Contractor shall coordinate all live taps and any other work on or manipulation of the existing water system with the engineer and city. Coordinate connections to the water system with Frank May, UDOT Maintenance Shed Foreman, (435) 730-1606.
2. Minimum depth of cover for culinary water lines unless otherwise shown on the plans shall be four (4) feet.
3. All pipe shall include a 3-inch magnetic locator tape installed in the pipeline trench approximately 12-inches below the ground surface. Identification tape shall be furnished with white or black printing on an approved colored field having the words:

CAUTION: UTILITY DESCRIPTION - BELOW.

4. All gate valves shall be located near to tees or crosses and their associated reducers as shown on the project plans.
5. Thrust blocking shall be applied at all tees, valves, plugs, caps and at bends deflecting 11 1/4 degrees or more. The fitting shall be encased in a protective plastic wrap before the thrust block is poured. Reaction blocking shall be concrete having a compressive strength of not less than 3000 pounds per square inch at 28 days. Blocking shall be placed between undisturbed soil and the fitting to be anchored. The area of bearing on the pipe and on the ground shall be as shown in the Drawings. The blocking shall be so placed that the pipe and the fittings will be accessible for repair.
6. There shall be 10 feet minimum of horizontal separation distance between all new water lines and new sewer lines. Exceptions occur where service lines are installed in a common trench and at crossings. Building water and sewer services may be installed in the same trench if it is placed on a solid shelf excavated at one side of the common trench. A minimum of 12 inches of vertical separation shall be maintained at all locations. Joints in water pipe should be 10 feet from crossings with sewer. Sewer within 10 feet of such crossings shall be mechanical joint cast iron or equal.
7. All crosses and tees shall be installed with the branches having the size of the largest intersecting pipe unless otherwise shown. The connections to smaller lines shall then be made by means of reducers from the tee or cross, unless otherwise shown on plans.
8. All air release and combination air valves shall be installed at the crest of the vertical curvature of the water line. Contractor shall record actual field stationing on record drawings.
9. All pipe shall be pressure tested as required in the specifications.
10. Culinary water lines shall be disinfected per the specifications and AWWA requirements.

GRAVITY PIPE

1. Minimum depth of cover for sewer lines unless otherwise shown on the plans shall be four (4) feet.
2. All concrete pipe shall be installed accurately to the defined line and grade shown on the plans. Pipe shall be laid in a straight horizontal and vertical line between manholes or junction boxes.
3. Gravity pipe lines shall be tested per the specifications.
4. Install pipe downstream to upstream.

MISCELLENEOUS UTILITES

1. All utility conduits shall be schedule 40 with long sweeps.
2. All utilities shall be buried a minimum of 36 inches below finished grade
3. All phone and communication lines to be placed in conduit under paved surfaces unless noted on the plans
4. Direct bury telephone and communication lines shall be surrounded by 6 inches of sand.
5. A minimum clearance of 24 inches shall be maintained between power conduits and other communication utilities.
6. Install a pull string with a 800 # capacity in all blank conduits.

EARTHWORK

1. The material shall be deposited in horizontal layers having a thickness of not more than eight inches prior to being compacted as hereinafter specified;
2. The moisture of compacted material shall be controlled at two percent plus or minus of the optimum moisture as determined by AASHTO T-180.
3. When the material has been conditioned as hereinbefore specified, the backfill or embankment shall be compacted as follows:
(a) Under roadways and extending one foot beyond the proposed back of walk, the fill or embankment material shall be compacted to a density equal to not less than 96% of maximum dry density as measured by AASHTO T-180.
(b) Under sidewalks and drive approaches the fill or embankment material (to at least one foot each side of the edge of the slab) shall be compacted to a density equal to not less than 96% of maximum dry density, as measured by AASHTO T-180.
(c) Other fills and embankments not listed above shall be compacted to a density equal to not less than 90% of maximum dry density, as measured by AASHTO T-180.

CONCRETE

1. All concrete required on this project shall be as noted in section 3300 of the project specification or other mix design approved by engineer.
2. Portland cement shall be Type II and shall comply with the Standard Specification for Portland Cement, ASTM C-150.
3. Deformed Billet-Steel Bars for Concrete Reinforcement (Grade 40 or Grade 60) - ASTM Designation A-615.
4. All bars shall be of the size specified and shall be placed in the positions shown on the Drawings in such a manner as to be firmly held during the placing of the concrete. Where not otherwise indicated, minimum clearance and cover as required by the ACI 318 Code, latest edition.
5. Metal ties or anchorages within the forms shall be equipped with cones, she-bolts or other devices that permit their removal to a depth of at least one inch without injury to the concrete.
6. All edges that will be exposed to view when the structure is completed shall be chamfered by placing molding in the forms, unless finishing with molding tools.

CONCRETE FINISH

1. All exposed vertical exposed surfaces shall receive a sack rubbed finish.
2. All non-exposed vertical exposed surfaces shall have ties and forming devices removed and remaining holes packed with a cement mortar mix.
3. All exposed horizontal surfaces on the concrete shall be accurately screeded to grade, floated, then broom finished, unless specified otherwise.
4. Joints and edges on unformed surfaces that will be exposed to view shall be chamfered or finished with molding tools.
5. Concrete shall not be mixed nor placed when the daily minimum atmospheric temperature is less than 40 degrees unless facilities are provided to prevent the concrete from freezing. The use of accelerators or antifreeze compounds will not be allowed.

SURFACE IMPROVEMENTS

1. The contractor shall retain and protect or remove and replace all landscaping, trees, utilities, ditches, culverts, fences, mailboxes, signs, lightpoles, headgates, existing concrete sidewalks, approaches, curb & gutter and other miscellaneous items. Any damage done by the contractor shall be repaired at his expense.
2. Construction of curb, gutter and sidewalk shall follow installation of storm drain/utilities improvement. Preparation of the area to be paved shall follow completion of the curb, gutter and sidewalk.
3. Sidewalk, curb and gutter, and concrete driveways shall be saw-cut vertically along the lines forming the mainline trench, in such a manner as to not cause damage to adjoining improvements.
4. Materials used for repair or replacement of surface improvements shall be equal to or better than the material removed.
5. Where trenches are in or cross surfaced roads, traffic lanes, driveways, or parking areas, the surface shall be removed, maintained, and restored to original condition or better.
6. All edges of trenches in paved areas shall be sawcut a minimum of 6 inches wider than the width disturbed by the trench excavation prior to placing asphalt patch.
7. Stockpiled topsoil shall be placed over areas disturbed by construction activities.
8. The Contractor shall grade the site to the finished contours shown on the Drawings. The Contractor shall run a track dozer or loader up and down the slopes to create longitudinal depressions in the finished surface to resist erosion and assist seed germination.
9. On sloping hillsides, contractor shall take precautions to mitigate possible erosion problems in the trench from storm water that might occur during or after construction.
10. The Contractor shall revegetate the areas on which topsoil has been placed.

PAVEMENT CONSTRUCTION

1. The Contractor is responsible for the disposal of paving material to be removed from the site. The Contractor shall be responsible to obtain a site permit and any permits or other approvals necessary for disposal of the excess material.
2. The granular material shall be placed and compacted to not less than 96% maximum dry density as determined by AASHTO T-180.
3. The finished compacted pavement shall have a density of 91% minimum, (no test less than 91% of the density determined in accordance with ASTM D-2041), as determined by ASTM D2170.
4. The contractor is to sawcut asphalt edges immediately prior to paving or patching.

SIGNING

1. All signing to be per UDOT Specification Section 2891
2. Sign panels to be reflective sheeting on aluminum.
3. Legend to be reflective also.
4. Post to be 2" perforated 12 gauage steel.
5. Install per detail on drawings.

PAVEMENT MARKINGS

1. Traffic paint to be acrylic latex for uncured paving (7 days old) and alkyd or chlorinated rubber for cured paving. (3 months old)
2. Apply at 180 sq. ft. / gallon for 2 coats.

SECTION AND DETAIL IDENTIFIERS

NOTE:
A DASH MAY BE PLACED IN THE LOWER PORTION OF THE IDENTIFIER IF THE DETAIL DRAWING OR SECTION VIEW IS LOCATED ON THE SAME SHEET.

SECTION IDENTIFICATION

DETAIL IDENTIFICATION

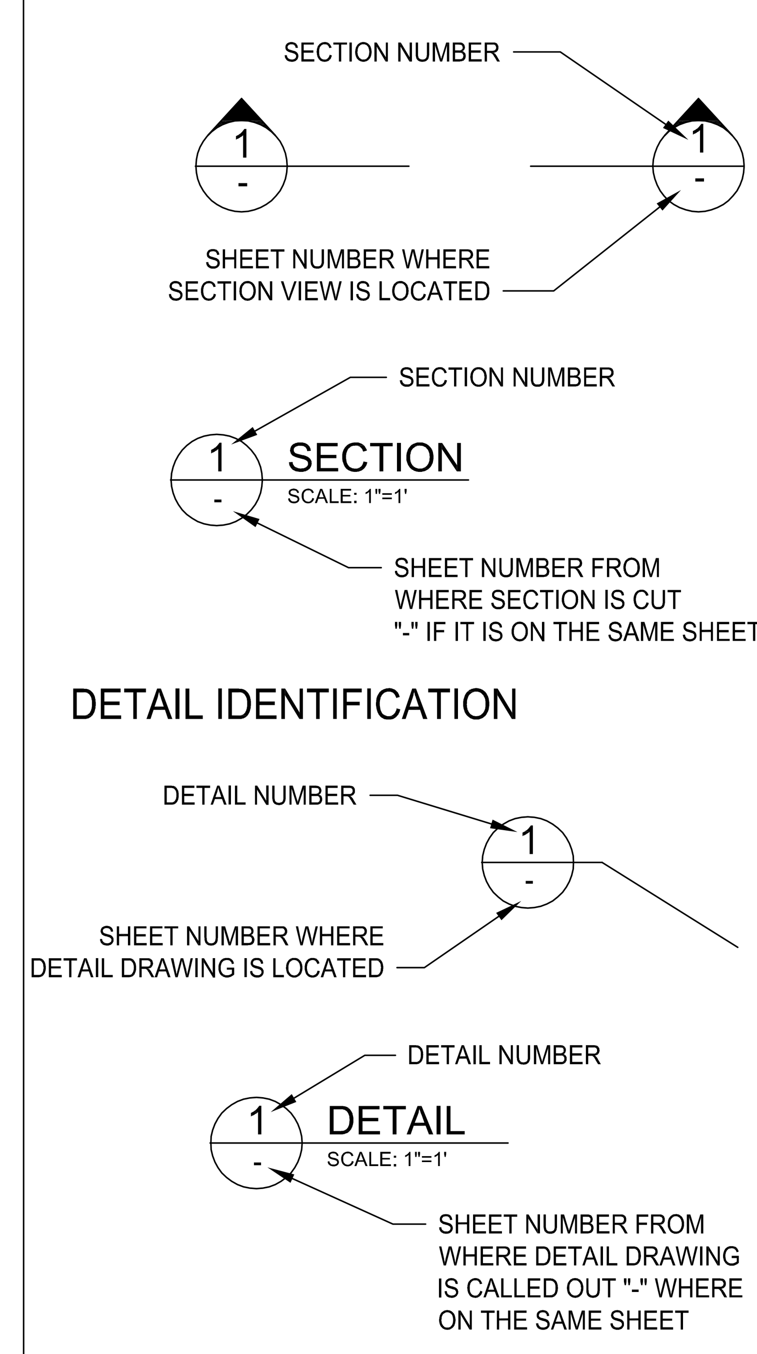

UTILITY CONTACT INFORMATION		
ENTITY	CONTACT PERSON	PHONE
Brigham City Water	Tyler Pugsley	(435)230-0422
Brigham City Sewer	Raymond Poulsen	(435)723-3146
Brigham City Power	Alan Wright	(435)734-6623
Archibald Propane	Mike Litchford	(435)257-6124
Qwest Communications	Tim Squires	(801)626-5411
State of Utah DAS Fuel Network (Fuel Island)	Steve Canning	(801)619-7232
UDOT Shed Foreman	Frank May	(435)730-1606

LINE LEGEND

NEW	EXISTING	
		CENTERLINE
		PROPERTY LINE
		EASEMENTS
4352	4352	CONTOUR
CW	CW	CULINARY_WATER
SW	SW	SECONDARY_WATER
E	E	ELECTRIC
OHP	OHP	OVERHEAD_POWER
UP	UP	UNDERGROUND_POWER
GAS	GAS	GAS_LINE
SS	SS	SANITARY_SEWER
SD	SD	STORM_DRAIN
T	T	TELEPHONE
UT	UT	UNDERGROUND_TELEPHONE
F	F	FIBER_OPTICS
IRR	IRR	IRRIGATION
LD	LD	LAND_DRAIN
TV	TV	CABLE_TV
		DITCH
		CHAINLINK_FENCE
X	X	BARBWIRE_FENCE
		GUARD RAIL
		EDGE OF ASPHALT
		RAILROAD

CLIENT

BRIGHAM CITY
MAINTENANCE FACILITY
STATION #1423
1325 EAST HIGHWAY 90
BRIGHAM CITY, UTAH 84302

DESIGNER

ARCHIPLEX GROUP
architecture · planning · design services
1135 South West Temple, Ste. A
Salt Lake City, UT 84101
P:(801) 961-7070
F:(801) 961-7373

CONSULTANTS

J-U-B
Engineers • Surveyors • Planners
40 West Cache Valley Blvd. Bldg. 3B
Logan, UT 84341
Phone: (435)713-9514
Fax: (435) 713-9503
JUB.com

PROFESSIONAL SEAL

REGISTERED PROFESSIONAL ENGINEER · ZAN P. MURRAY · STATE OF UTAH

ISSUE

MARK	DATE	DESCRIPTION
	2/15/06	CONSTRUCTION DOCUMENTS
	1/18/06	FINAL REVIEW SET
	12/21/05	DD REVIEW SET
	9/16/05	PRELIMINARY REVIEW SET

DFCM PROJECT NO: 05059900
ARCHIPLEX PROJECT NO: 050013.01
DRAWN BY: MJW
CHECKED BY: ZPM
SCALE: N.T.S.
DATE: FEBRUARY 15, 2006

KEY PLAN

SHEET TITLE

CIVIL NOTES

C001

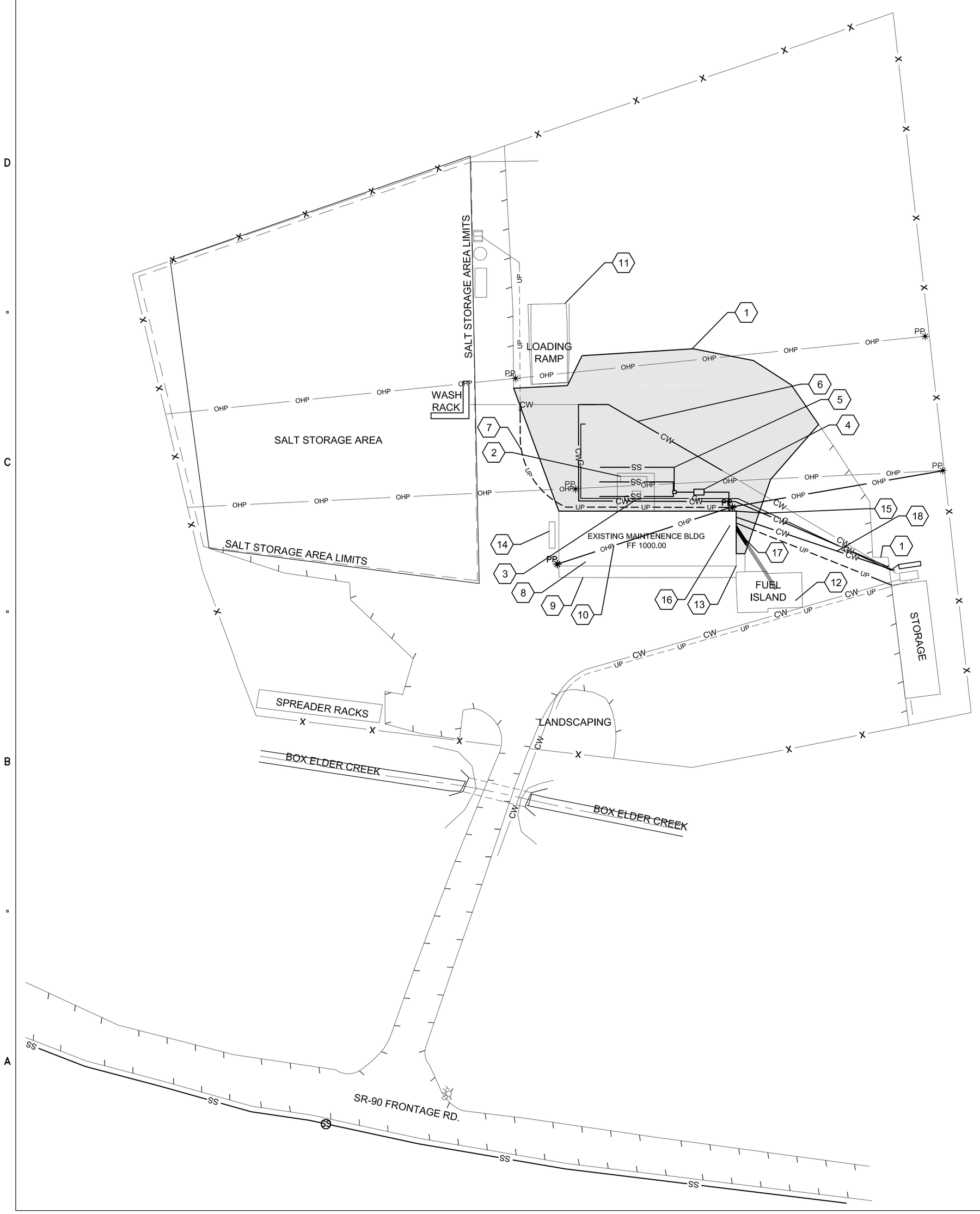

GRAPHIC SCALE

20 0 10 20 40 80

(IN FEET)
1 inch = 40 ft.

GENERAL NOTES:

1. ALL WORK TO COMPLY WITH STATE REGULATIONS.

2. CONTRACTOR TO OBTAIN A DEMOLITION PERMIT FROM STATE OF UTAH PRIOR TO DEMOLITION OF BUILDING.

3. COMPLY WITH ALL OSHA REGULATIONS DURING SITE WORK.

5. SAWCUT ALL ASPHALT TO REMAIN 6" FROM EDGE OF SUBBASE DISTURBANCE.

6. LOCATION AND SIZE OF EXISTING UTILITIES IS APPROXIMATE.

7. PROTECT ALL EXISTING UTILITIES THAT ARE TO STAY IN PLACE.

KEY NOTES:

1. SAW CUT AND REMOVE EXISTING APPROXIMATELY 18,200 S.F. OF ASPHALT (SHADED AREA).

2. TEMPORARILY RELOCATE PROPANE TANK TO WEST SIDE OF EXISTING BUILDING (SEE NOTE 14 THIS SHEET). CONTINUE PROPANE SUPPLY TO EXISTING BUILDING UNTIL NEW BUILDING IS IN SERVICE. RELOCATE CONCRETE TANK BARRIERS TO PROTECT TEMPORARY TANK LOCATION. UPON COMPLETION OF PROJECT PERMANENTLY RELOCATE TANK TO SERVICE NEW BUILDING (SEE SHEET C104) AND RELOCATE CONCRETE BARRIERS TO A LOCATION ON SITE SPECIFIED BY MAINTENANCE BUILDING FOREMAN.

3. COMPLETELY REMOVE AND DISPOSE OF EXISTING WASTE OIL TANK AND CONCRETE ENCLOSURE. DISPOSAL TO COMPLY WITH ALL LOCAL, STATE AND FEDERAL ENVIRONMENTAL REGULATIONS.

4. PUMP EMPTY AND REMOVE EXISTING SEPTIC TANK.

5. REMOVE DRAIN FIELD PIPE AND ORGANIC SOIL IN AREAS LOCATED BENEATH NEW CONSTRUCTION.

6. REMOVE SECTION OF EXISTING 2" WATERLINE (SEE UTILITY PLAN FOR RECONNECTION NOTES).

7. UPON COMPLETION AND INSPECTION OF ELECTRICAL SERVICE TO NEW BUILDING, REMOVE SECTION OF UNDERGROUND POWER FEED AND REPLACE WITH FEED FROM ELECTRICAL SERVICE FROM NEW BUILDING (SEE UTILITY PLAN).

8. AFTER NEW BUILDING IS INSPECTED AND IN USE, COMPLETELY REMOVE AND DISPOSE OF EXISTING MAINTENANCE BUILDING. OBTAIN PERMITS AS REQUIRED FROM THE STATE OF UTAH.

9. REMOVE CONCRETE APRON.

10. REMOVE EXISTING POWER LINE AND (2) POWER POLES AFTER NEW BUILDING AND ELECTRICAL SERVICE IS IN USE.

11. REMOVE EXISTING EARTHEN LOADING RAMP (BY OWNER).

12. PROTECT EXISTING FUEL ISLAND.

13. RELOCATE FUEL ISLAND VENT. SEE UTILITY PLANS AND SPECIFICATIONS.

14. TEMPORARY LOCATION OF PROPANE TANK WHILE UNDER CONSTRUCTION.

15. REMOVE SECTION OF UNDERGROUND TELEPHONE LINE WHEN CONNECTING PHONE SERVICE TO NEW BUILDING.

16. STATE OF UTAH DAS FUEL NETWORK TO MOVE FUEL ISLAND EQUIPMENT TO NEW BUILDING BEFORE DEMOLITION OF EXISTING BUILDING.

17. REMOVE OLD FUEL ISLAND CONDUITS AFTER FUEL ISLAND EQUIPMENT HAS BEEN RELOCATED. CAP CONDUITS NOT USED AT EDGE OF ASPHALT DEMOLITION AREA. SEE SHEET E100 FOR CONNECTION DETAILS.

18. CAP AT PUMP HOUSE AND ABANDON WATERLINE TO EXISTING BUILDING PRIOR TO DEMOLITION.

CLIENT

BRIGHAM CITY
MAINTENANCE FACILITY
STATION #1423
1325 EAST HIGHWAY 90
BRIGHAM CITY, UTAH 84302

DESIGNER

ARCHIPLEX GROUP
architecture · planning · design services
1135 South West Temple, Ste. A
Salt Lake City, UT 84101
P:(801) 961-7070
F:(801) 961-7373

CONSULTANTS

J·U·B
Engineers • Surveyors • Planners
40 West Cache Valley Blvd. Bldg. 3B
Logan, UT 84341
Phone: (435)713-9514
Fax: (435) 713-9503
JUB.com

PROFESSIONAL SEAL

REGISTERED PROFESSIONAL ENGINEER
#359811-2202
ZAN P. MURRAY
2/14/06
STATE OF UTAH

ISSUE

MARK	DATE	DESCRIPTION
	2/15/06	CONSTRUCTION DOCUMENTS
	1/18/06	FINAL REVIEW SET
	12/21/05	DD REVIEW SET
	9/16/05	PRELIMINARY REVIEW SET

DFCM PROJECT NO:	05059900
ARCHIPLEX PROJECT NO:	050013.01
DRAWN BY:	MJW
CHECKED BY:	ZPM
SCALE:	1"=40'
DATE:	FEBRUARY 15, 2006

KEY PLAN

SHEET TITLE

DEMOLITION PLAN

C101

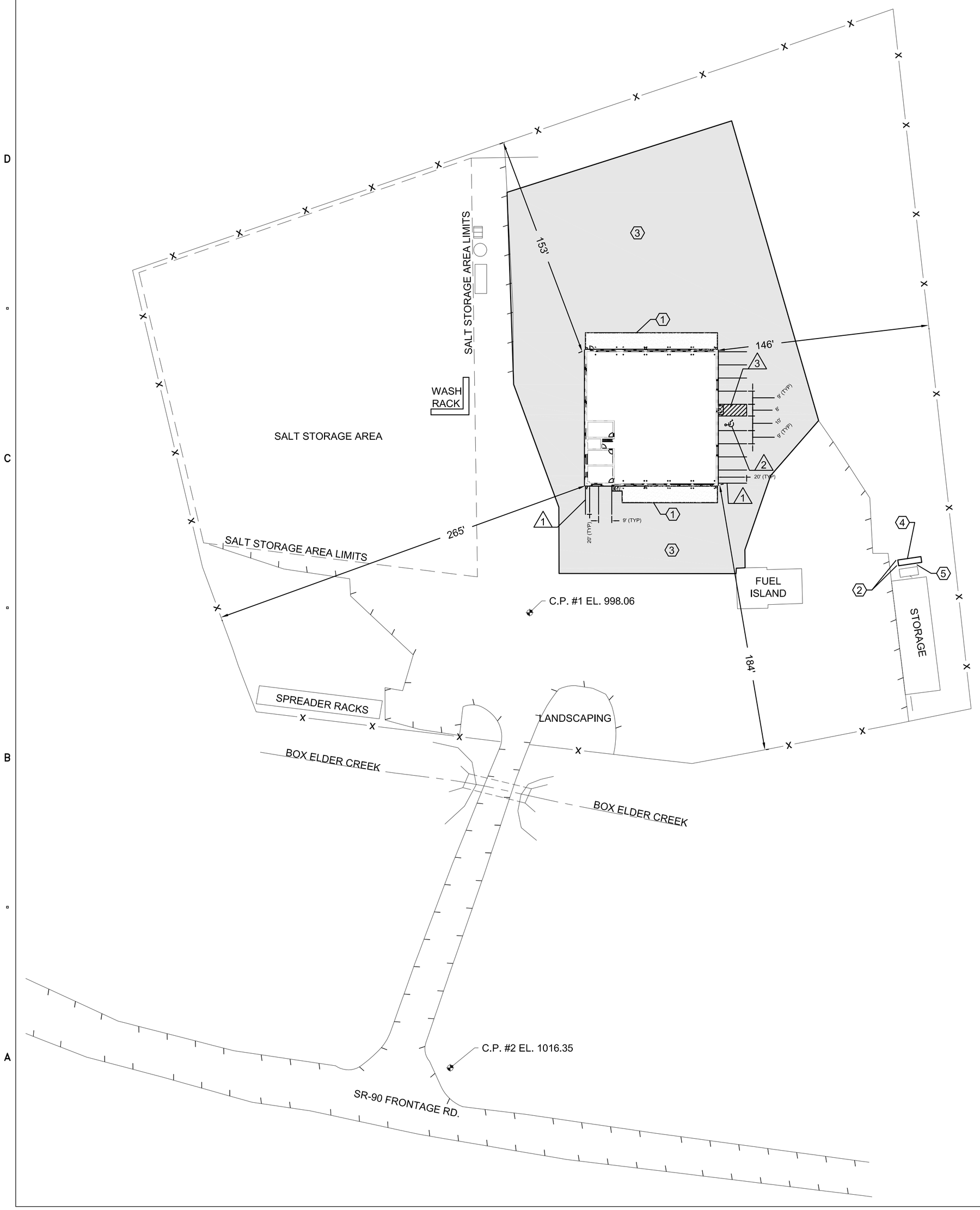

GENERAL NOTES:

1. ALL WORK TO COMPLY WITH STATE REGULATIONS.

2. COMPLY WITH ALL OSHA REGULATIONS DURING SITE WORK.

3. STRIPE PER SPECIFICATIONS AND NOTES ON C001.

4. MAINTAIN 15 FEET CLEAR DISTANCE FROM ALL OVERHEAD HIGH VOLTAGE POWER LINES.

KEY NOTES:

1. INSTALL CONCRETE PAD AS PER SECTION B/C501. THICKEN OUTER EDGE TO 12" AS PER 1/C501.

2. INSTALL CONCRETE BOLLARD AS PER DETAIL B2/AE502.

3. INSTALL ASPHALT IN SHADED AREA AS PER SECTION A/C501. APPROXIMATELY 38,800-S.F. SEE UTILITY PLAN AND SECTION E/C501 FOR ASPHALT REQUIREMENTS OVER UTILITY TRENCHES.

4. INSTALL 4' X 16' X 6" CONCRETE PAD AS PER DETAIL 1/C501.

5. MAINTAIN 4 FEET CLEARANCE BETWEEN EDGE OF PAD AND PUMP HOUSE.

STRIPING NOTES:

1. 4" YELLOW STRIPE (TYP)

2. HANDICAP SYMBOL

3. 4" YELLOW HASHING (24" SPACING, 45° ANGLE)

GRAPHIC SCALE

20 0 10 20 40 80

(IN FEET)
1 inch = 40 ft.

CLIENT

BRIGHAM CITY
MAINTENANCE FACILITY
STATION #1423
1325 EAST HIGHWAY 90
BRIGHAM CITY, UTAH 84302

DESIGNER

ARCHIPLEX GROUP
architecture · planning · design services
1135 South West Temple, Ste. A
Salt Lake City, UT 84101
P:(801) 961-7070
F:(801) 961-7373

CONSULTANTS

J·U·B
Engineers • Surveyors • Planners
40 West Cache Valley Blvd. Bldg. 3B
Logan, UT 84341
Phone: (435)713-9514
Fax: (435) 713-9503
JUB.com

PROFESSIONAL SEAL

REGISTERED PROFESSIONAL ENGINEER
#359871-2202
ZAN P. MURRAY
2/14/06
STATE OF UTAH

ISSUE

MARK	DATE	DESCRIPTION
	2/15/06	CONSTRUCTION DOCUMENTS
	1/18/06	FINAL REVIEW SET
	12/21/05	DD REVIEW SET
	9/16/05	PRELIMINARY REVIEW SET

DFCM PROJECT NO:	05059900
ARCHIPLEX PROJECT NO:	050013.01
DRAWN BY:	MJW
CHECKED BY:	ZPM
SCALE:	1"=40'
DATE:	FEBRUARY 15, 2006

KEY PLAN

SHEET TITLE

SITE / STRIPING PLAN

C102

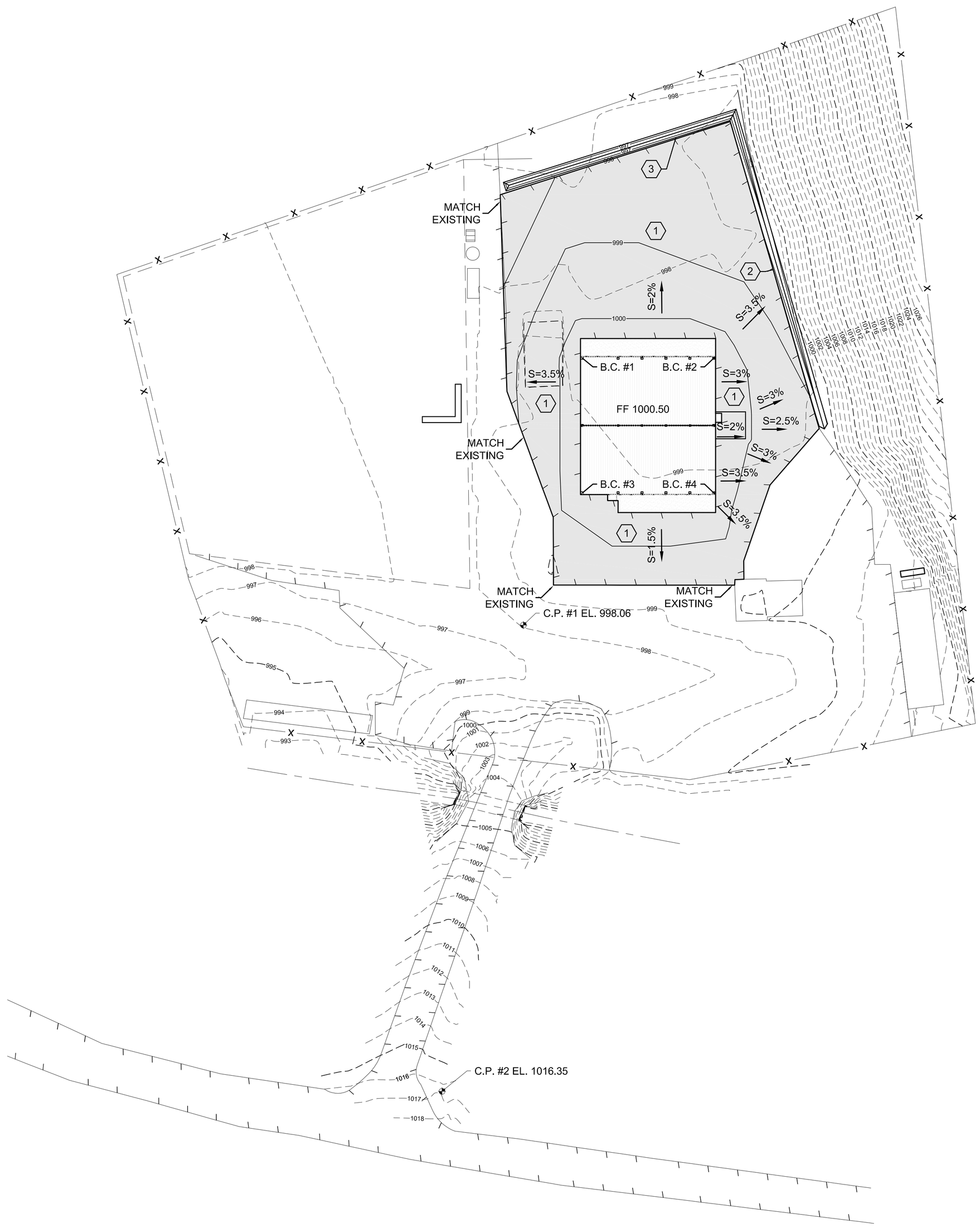

GRAPHIC SCALE

(IN FEET)
1 inch = 40 ft.

GENERAL NOTES:

1. ALL WORK TO COMPLY WITH STATE REGULATIONS.

2. ALL ACCESSABLE ROUTES TO CONFORM TO ADA STANDARDS, LATEST EDITION.

3. ALL CONCRETE AND ASPHALT THAT ABUTS THE NEW BUILDING HAS A STARTING TOP OF SURFACE ELEVATION OF 1000.5 AND SLOPES AWAY FROM THE BUILDING AS SHOWN ON THE PLAN.

KEY NOTES:

1. GRADING UNDER NEW ASPHALT AS PER CIVIL SPECIFICATIONS

2. INSTALL DRAINAGE SWALE AS PER SECTION C/C501.

3. INSTALL DRAINAGE / DETENTION SWALE AS PER SECTION D/C501.

BUILDING COORDINATE TABLE:

POINT	NORTHING	EASTING
C.P. #1	19,979.09	10,017.58
C.P. #2	19,667.41	9,963.17
B.C. #1	20,158.70	10,055.73
B.C. #2	20,158.70	10,146.06
* B.C. #3	20,066.36	10,055.73
B.C. #4	20,066.36	10,146.06

* MAINTAIN MIN. 5' CLEARANCE BETWEEN FINISHED BUILDING AND POWER POLE. ADJUST BUILDING LOCATION AS NECESSARY.

ABREVIATIONS:

TOA - TOP OF ASPHALT

TOC - TOP OF CONCRETE

TOW - TOP OF SIDEWALK

CLIENT

BRIGHAM CITY
MAINTENANCE FACILITY
STATION #1423
1325 EAST HIGHWAY 90
BRIGHAM CITY, UTAH 84302

DESIGNER

ARCHIPLEX GROUP
architecture • planning • design services
1135 South West Temple, Ste. A
Salt Lake City, UT 84101
P:(801) 961-7070
F:(801) 961-7373

CONSULTANTS

J·U·B
Engineers • Surveyors • Planners
40 West Cache Valley Blvd. Bldg. 3B
Logan, UT 84341
Phone: (435)713-9514
Fax: (435) 713-9503
JUB.com

PROFESSIONAL SEAL

REGISTERED PROFESSIONAL ENGINEER
#353914-2202
ZAN P. MURRAY
2/14/06
STATE OF UTAH

ISSUE

MARK	DATE	DESCRIPTION
	2/15/06	CONSTRUCTION DOCUMENTS
	1/18/06	FINAL REVIEW SET
	12/21/05	DD REVIEW SET
	9/16/05	PRELIMINARY REVIEW SET

DFCM PROJECT NO:	05059900
ARCHIPLEX PROJECT NO:	050013.01
DRAWN BY:	MJW
CHECKED BY:	ZPM
SCALE:	1"=40'
DATE:	FEBRUARY 15, 2006

KEY PLAN

SHEET TITLE

GRADING PLAN

C103

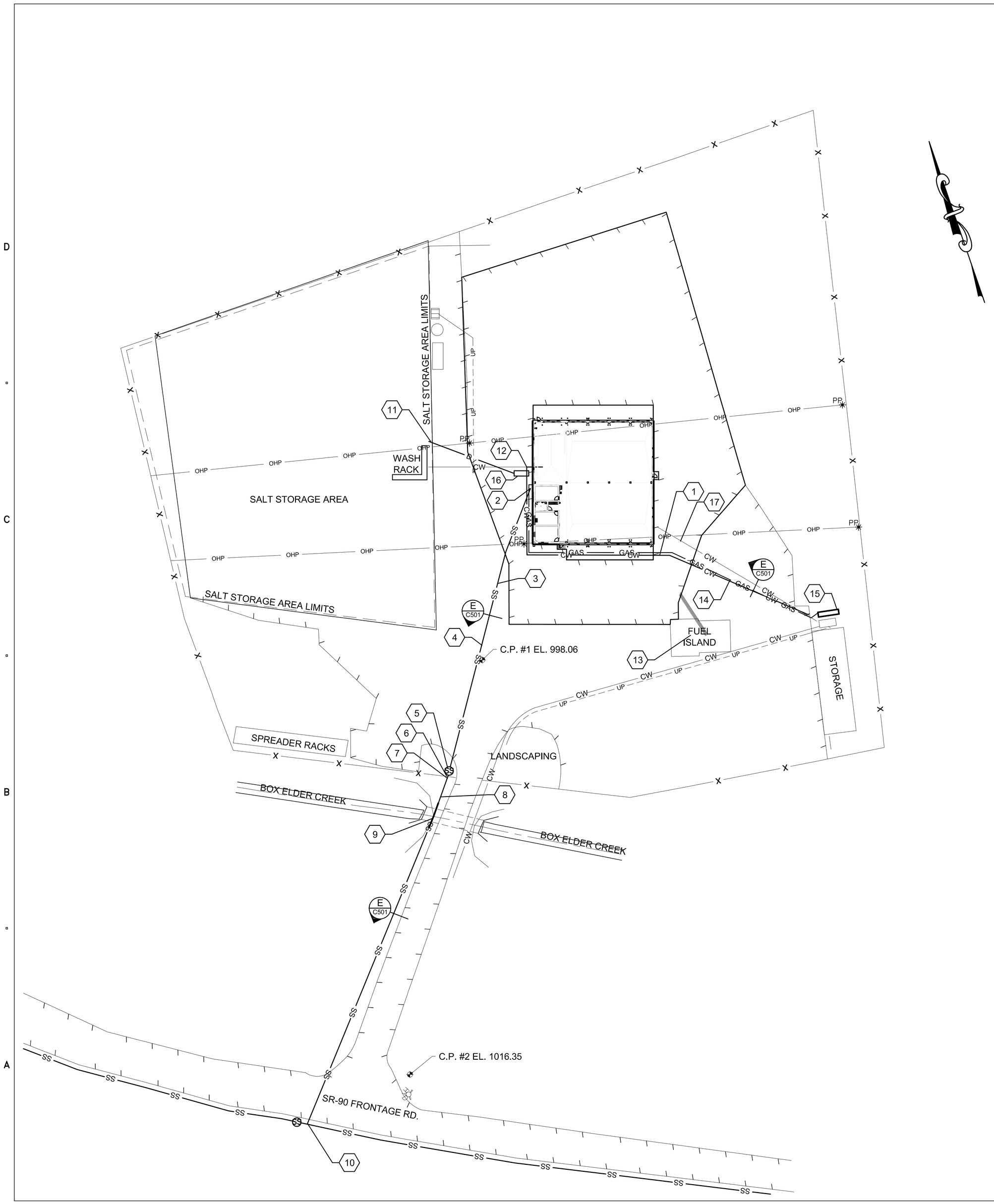

GRAPHIC SCALE

(IN FEET)
1 inch = 40 ft.

GENERAL NOTES:

1. ALL WORK TO COMPLY WITH STATE REGULATIONS.

2. ALL WORK TO COMPLY WITH THE INTERNATIONAL CODES 2003 EDITION.

3. ALL WATER LINES TO HAVE A MINIMUM OF 4' COVER.

4. MAINTAIN 15 FEET CLEAR DISTANCE FROM ALL OVERHEAD HIGH VOLTAGE POWER LINES.

5. ELEVATION OF LOWEST POWER LINE AT THE NORTH CORRIDOR IS APPROXIMATELY 1056 FT. AT THE LOWEST POINT.

6. ELEVATION OF THE TELEMETRY LINE ON THE NORTH CORRIDOR IS 1040 FT.

7. ELEVATION OF THE LOWEST POWER LINE AT THE SOUTH CORRIDOR IS 1041 FT. AT THE LOWEST POINT.

8. LOCATIONS OF ALL UTILITIES ARE APPROXIMATE. FIELD VERIFICATION SHOULD OCCUR PRIOR TO EXCAVATION.

9. SEE DRAWING E100 FOR ELECTRICAL SITE PLAN.

KEY NOTES:

1. CONNECT 2" WATERLINE FROM TEE NEAR PUMPHOUSE TO EXISTING WATERLINE WHERE IT WAS DEMOLISHED ON WEST SIDE OF NEW BUILDING (SEE DEMOLITION PLAN AND DETAIL 2/C501).

2. SEWER CLEANOUT AS PER DETAIL 3/C501.

3. 4 INCH SEWER LINE AT CONTSTANT SLOPE (1/16" PER FOOT MIN.).

4. SEWER CLEANOUT AS PER DETAIL 3/C501.

5. SIMPLEX SEWAGE PUMPING STATION WITH ALARM AND CONTROL PANEL ON PERMANENT STAND (SEE SPECIFICATIONS).

6. ANTI-SIPHON CHECK VALVE.

7. FULLY PORTED BALL VALVE WITH VALVE BOX PER CIVIL NOTES SHEET C001.

8. LOW PRESSURE SEWER DISCHARGE PIPE.

9. PIPE INSULATION, HEAT TAPE WITH THERMOSTATIC CONTROL, AND CASING AS PER DETAIL 5/C501 IN AREA AROUND CONCRETE BOX CULVERT WITH LESS THAN 48" OF COVER.

10. CONNECT LOW PRESSURE SEWER DISCHARGE PIPE TO 10 INCH MUNICIPAL GRAVITY SEWER LINE WITH SERVICE SADDLE AND CORP STOP.

11. 4" DRAIN LINE FROM SAND/OIL SEPARATOR TO SALT STORAGE AREA MAINTAIN 1/8" PER FOOT SLOPE.

12. STOP AND WASTE AS PER DETAIL 4/C501.

13. MOVE FUEL ISLAND VENT TO MAST ON FUEL ISLAND. COORDINATE WITH STEVE CANNING AT DAS FUEL NETWORK (SEE SPECIFICATIONS).

14. INSTALL LP GAS LINE FROM NEW TANK LOCATION TO WEST SIDE OF BUILDING SEE DETAIL 2/C501.

15. FINAL PROPANE TANK LOCATION.

16. SAND/OIL SEPARATOR SEE PLUMBING PLANS.

17. CAP AND ABANDON 2" WATERLINE AT PUMP HOUSE WHEN NEW 2" WATERLINE IS COMPLETED.

CLIENT

BRIGHAM CITY
MAINTENANCE FACILITY
STATION #1423
1325 EAST HIGHWAY 90
BRIGHAM CITY, UTAH 84302

DESIGNER

ARCHIPLEX GROUP
architecture • planning • design services
1135 South West Temple, Ste. A
Salt Lake City, UT 84101
P:(801) 961-7070
F:(801) 961-7373

CONSULTANTS

J·U·B
Engineers • Surveyors • Planners
40 West Cache Valley Blvd. Bldg. 3B
Logan, UT 84341
Phone: (435)713-9514
Fax: (435) 713-9503
JUB.com

PROFESSIONAL SEAL

REGISTERED PROFESSIONAL ENGINEER
#353914-2202
ZAN P. MURRAY
2/15/06
STATE OF UTAH

ISSUE

MARK	DATE	DESCRIPTION
	2/15/06	CONSTRUCTION DOCUMENTS
	1/18/06	FINAL REVIEW SET
	12/21/05	DD REVIEW SET
	9/16/05	PRELIMINARY REVIEW SET

DFCM PROJECT NO:	05059900
ARCHIPLEX PROJECT NO:	050013.01
DRAWN BY:	MJW
CHECKED BY:	ZPM
SCALE:	1"=40'
DATE:	FEBRUARY 15, 2006

KEY PLAN

SHEET TITLE

UTILITY PLAN

C104

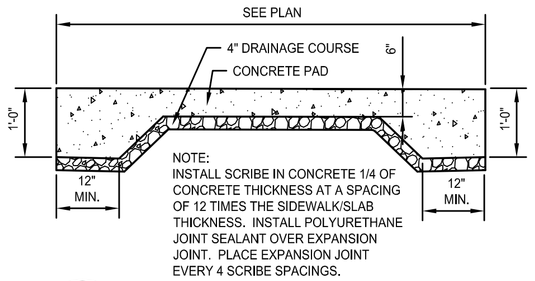

1 / - CONCRETE PAD DETAIL

SCALE: NTS

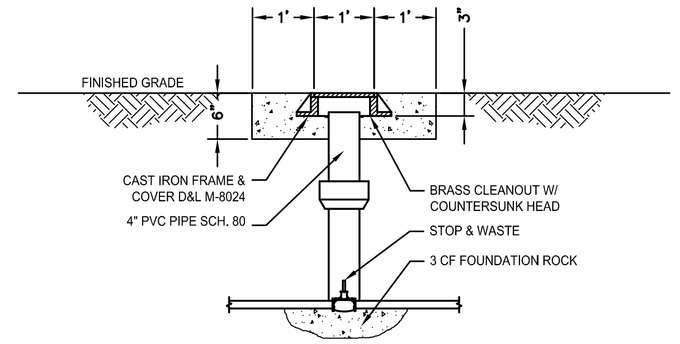

4 / - STOP & WASTE DETAIL

SCALE: NTS

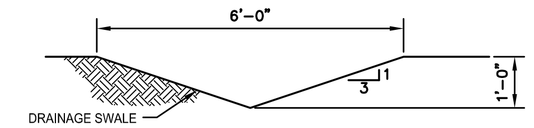

C / - DRAINAGE SWALE SECTION

SCALE: NTS

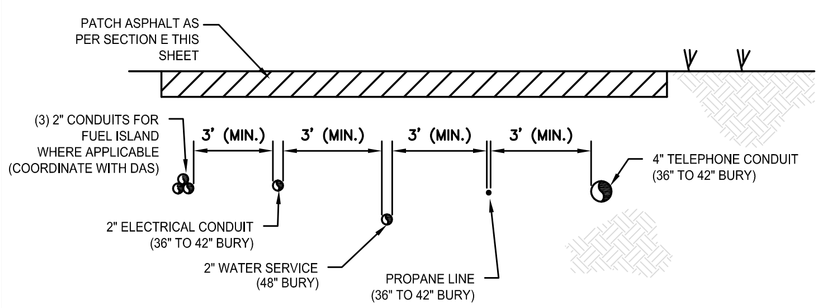

2 / - TYPICAL TRENCH UTILITY PLACEMENT

SCALE: NTS

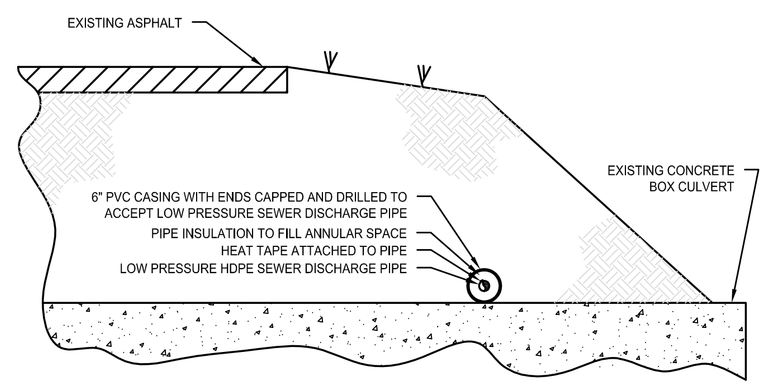

5 / - LOW PRESSURE SEWER FROST PROTECTION

SCALE: NTS

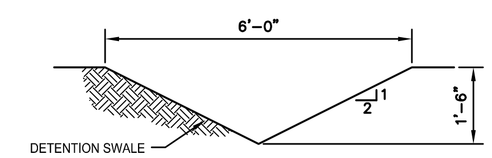

D / - DRAINAGE / DETENTION SWALE SECTION

SCALE: NTS

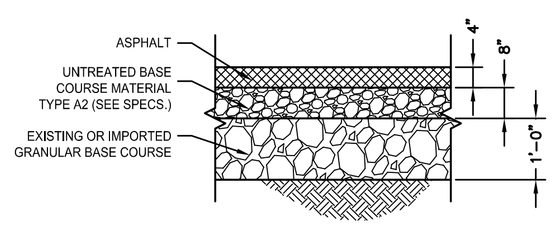

A / - ASPHALT SECTION

SCALE: NTS

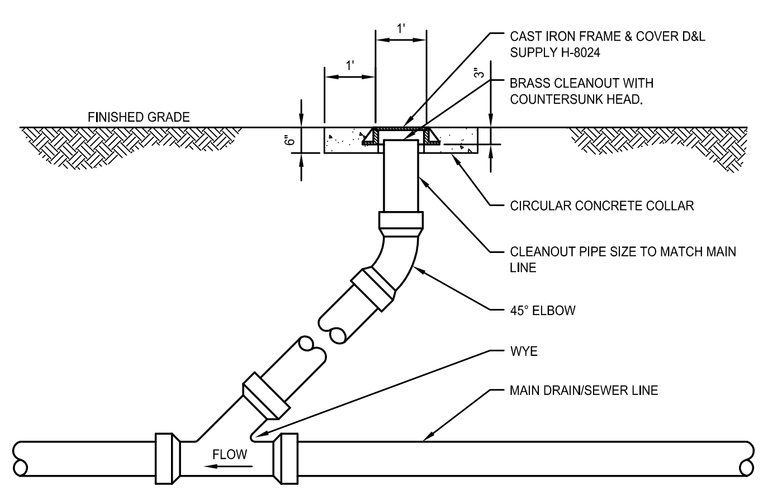

3 / - SEWER/DRAIN LINE CLEANOUT DETAIL

SCALE: NTS

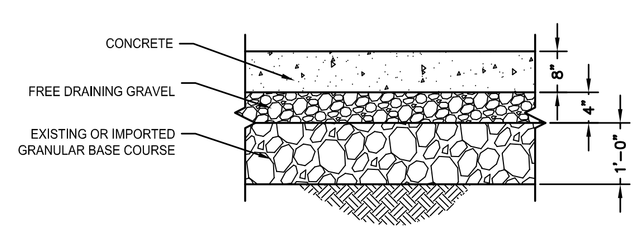

B / - CONCRETE SECTION

SCALE: NTS

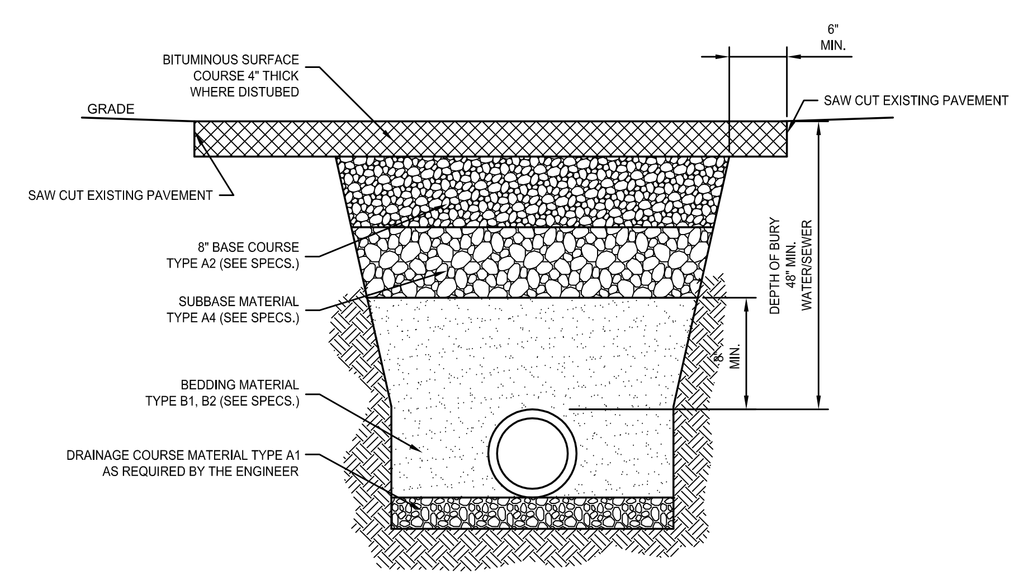

E / - TRENCH SECTION (ASPHALT)

SCALE: NTS

CLIENT

BRIGHAM CITY
MAINTENANCE FACILITY
STATION #1423
1325 EAST HIGHWAY 90
BRIGHAM CITY, UTAH 84302

DESIGNER

ARCHIPLEX GROUP
architecture · planning · design services
1135 South West Temple, Ste. A
Salt Lake City, UT 84101
P:(801) 961-7070
F:(801) 961-7373

CONSULTANTS

J·U·B
Engineers • Surveyors • Planners
40 West Cache Valley Blvd. Bldg. 3B
Logan, UT 84341
Phone: (435)713-9514
Fax: (435) 713-9503
JUB.com

PROFESSIONAL SEAL

REGISTERED PROFESSIONAL ENGINEER #359874-2202 ZAN P. MURRAY 2/14/06 STATE OF UTAH

ISSUE

MARK	DATE	DESCRIPTION
	2/15/06	CONSTRUCTION DOCUMENTS
	1/18/06	FINAL REVIEW SET
	12/21/05	DD REVIEW SET
	9/16/05	PRELIMINARY REVIEW SET

DFCM PROJECT NO:	05059900
ARCHIPLEX PROJECT NO:	050013.01
DRAWN BY:	MJW
CHECKED BY:	–
SCALE:	1/8"=1'-0"
DATE:	FEBRUARY 15, 2006

KEY PLAN

SHEET TITLE

CIVIL DETAILS

C501

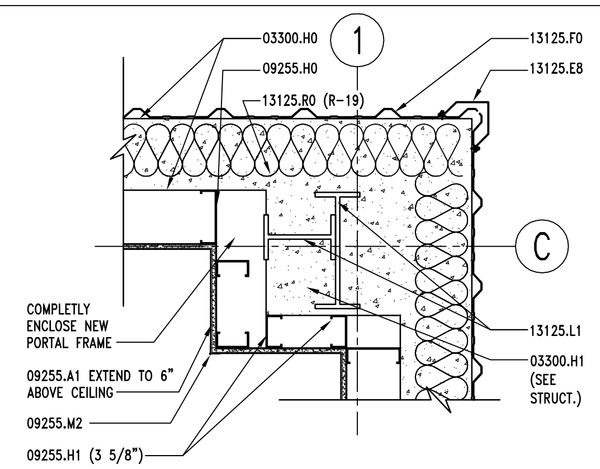

D1 COLUMN DETAIL

AE101 REF. AE101 SCALE: 1" = 1'-0"

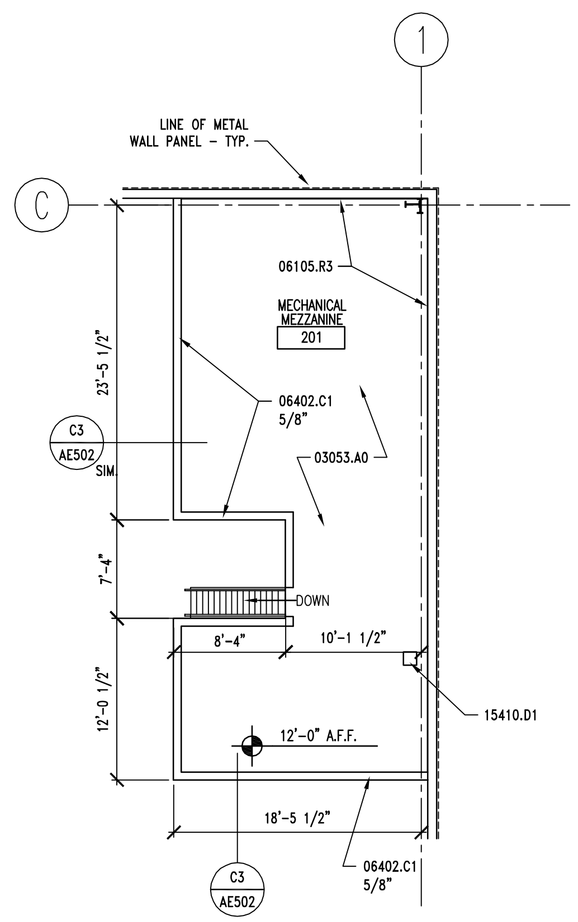

B1 MECH. MEZZANINE PLAN

AE101 REF. SCALE: 1/8" = 1'-0"

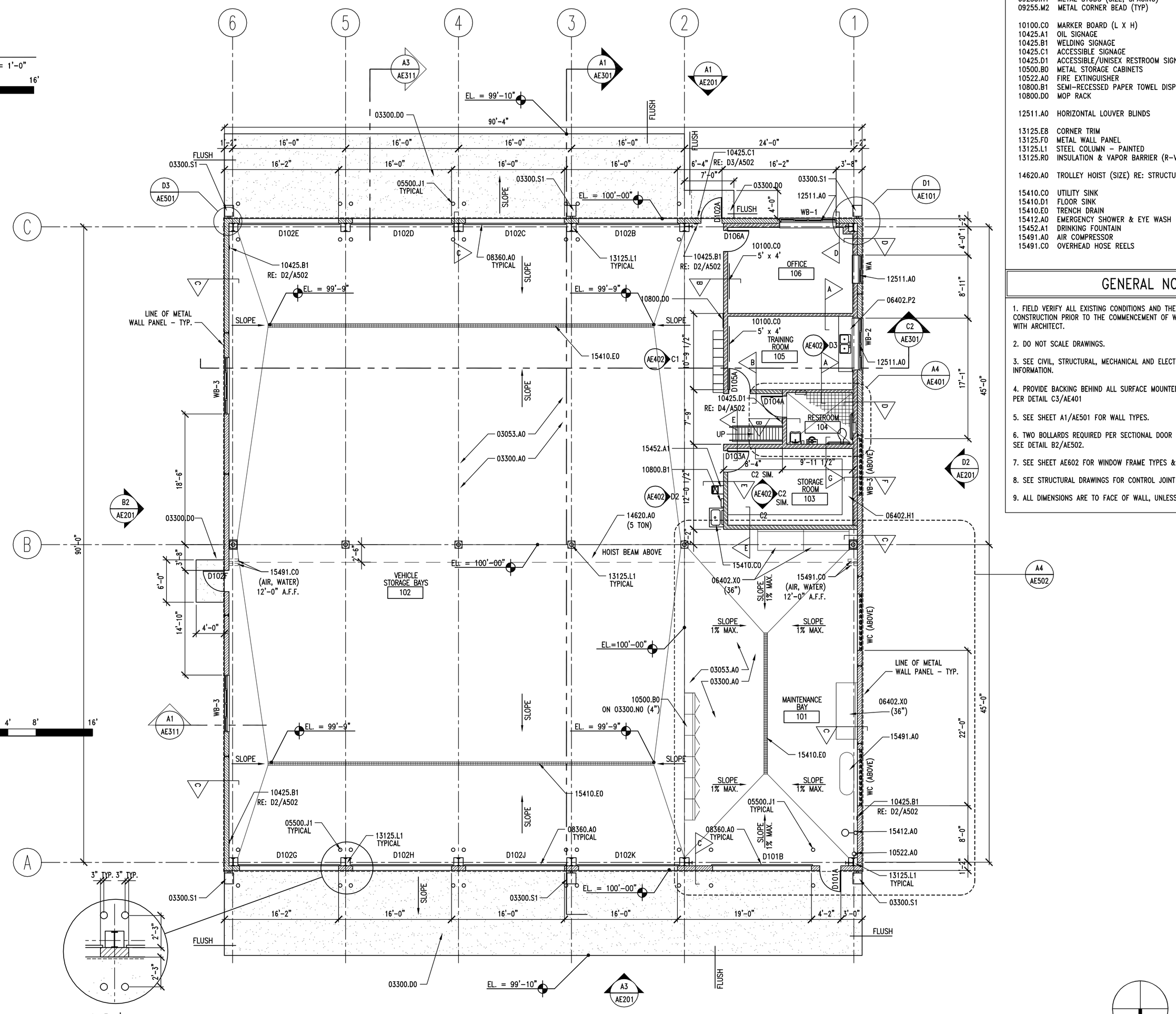

A2 FLOOR PLAN

AE101 REF. SCALE: 1/8" = 1'-0"

KEYNOTES

03053.A0	CONCRETE WATER PROOFING SYSTEM
03300.A0	CONCRETE SLAB ON GRADE
03300.D0	CONCRETE PAD
03300.H0	FOUNDATION WALL, RE: STRUCTURAL
03300.H1	CONCRETE PIER, RE: STRUCTURAL
03300.N0	CONCRETE CURB (HEIGHT)
03300.S1	SPLASH BLOCK
05500.J1	PIPE BOLLARD (DIAMETER) GALVANIZED & PAINTED
06105.R3	G1S A/C PLYWOOD (THICKNESS)
06402.C1	PAINT GRADE WOOD CAP (THICK)
06402.H1	ADJUSTABLE SHELVES
06402.P2	COUNTERTOP - P. LAM. ON 3/4" PLYWOOD
06402.X0	WORK BENCH (DEPTH)
08360.A0	OVERHEAD SECTIONAL DOOR
09255.A1	GYPSUM BOARD (THICKNESS)
09255.H0	METAL STUD
09255.H1	METAL STUDS (SIZE, SPACING)
09255.M2	METAL CORNER BEAD (TYP)
10100.C0	MARKER BOARD (L X H)
10425.A1	OIL SIGNAGE
10425.B1	WELDING SIGNAGE
10425.C1	ACCESSIBLE SIGNAGE
10425.D1	ACCESSIBLE/UNISEX RESTROOM SIGNAGE
10500.B0	METAL STORAGE CABINETS
10522.A0	FIRE EXTINGUISHER
10800.B1	SEMI-RECESSED PAPER TOWEL DISPENSER & WASTE RECEPTACLE
10800.D0	MOP RACK
12511.A0	HORIZONTAL LOUVER BLINDS
13125.E8	CORNER TRIM
13125.F0	METAL WALL PANEL
13125.L1	STEEL COLUMN - PAINTED
13125.R0	INSULATION & VAPOR BARRIER (R-VALUE)
14620.A0	TROLLEY HOIST (SIZE) RE: STRUCTURAL
15410.C0	UTILITY SINK
15410.D1	FLOOR SINK
15410.E0	TRENCH DRAIN
15412.A0	EMERGENCY SHOWER & EYE WASH
15452.A1	DRINKING FOUNTAIN
15491.A0	AIR COMPRESSOR
15491.C0	OVERHEAD HOSE REELS

GENERAL NOTES

1. FIELD VERIFY ALL EXISTING CONDITIONS AND THEIR COMPATIBILITY WITH NEW CONSTRUCTION PRIOR TO THE COMMENCEMENT OF WORK. COORDINATE DISCREPANCIES WITH ARCHITECT.
2. DO NOT SCALE DRAWINGS.
3. SEE CIVIL, STRUCTURAL, MECHANICAL AND ELECTRICAL DRAWINGS FOR MORE INFORMATION.
4. PROVIDE BACKING BEHIND ALL SURFACE MOUNTED EQUIPMENT AND/OR FIXTURES PER DETAIL C3/AE401
5. SEE SHEET A1/AE501 FOR WALL TYPES.
6. TWO BOLLARDS REQUIRED PER SECTIONAL DOOR JAMB. ALIGN WITH DOOR JAMB, SEE DETAIL B2/AE502.
7. SEE SHEET AE602 FOR WINDOW FRAME TYPES & GLAZING SCHED.
8. SEE STRUCTURAL DRAWINGS FOR CONTROL JOINT LOCATIONS IN CONCRETE SLAB.
9. ALL DIMENSIONS ARE TO FACE OF WALL, UNLESS NOTED OTHERWISE.

CLIENT

BRIGHAM CITY
MAINTENANCE FACILITY
STATION #1423
1325 EAST HIGHWAY 90
BRIGHAM CITY, UTAH 84302

DESIGNER

ARCHIPLEX GROUP
architecture · planning · design services
1135 South West Temple, Ste. A
Salt Lake City, UT 84101
P:(801) 961-7070
F:(801) 961-7373

CONSULTANTS

PROFESSIONAL SEAL

STATE OF UTAH
RALPH M. STANISLAW
95-310818-0301
LICENSED ARCHITECT

ISSUE

MARK	DATE	DESCRIPTION
	2/15/06	CONSTRUCTION DOCUMENTS
	1/18/06	FINAL REVIEW SET
	12/21/05	DD REVIEW SET
	9/16/05	PRELIMINARY REVIEW SET

DFCM PROJECT NO:	05059900
ARCHIPLEX PROJECT NO:	050013.01
DRAWN BY:	K. PHILLIPS
CHECKED BY:	R. STANISLAW
SCALE:	1/8"=1'-0"
DATE:	FEBRUARY 15, 2006

KEY PLAN

SHEET TITLE

FIRST FLOOR AND MEZZANINE PLANS

AE101

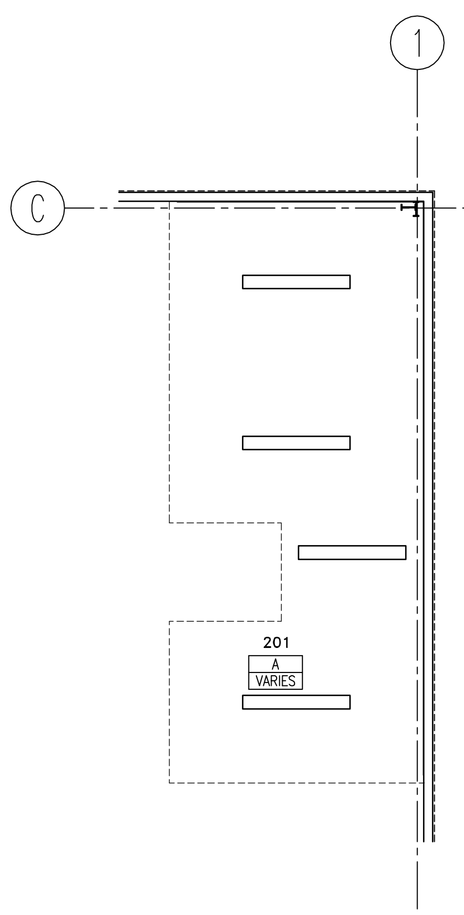

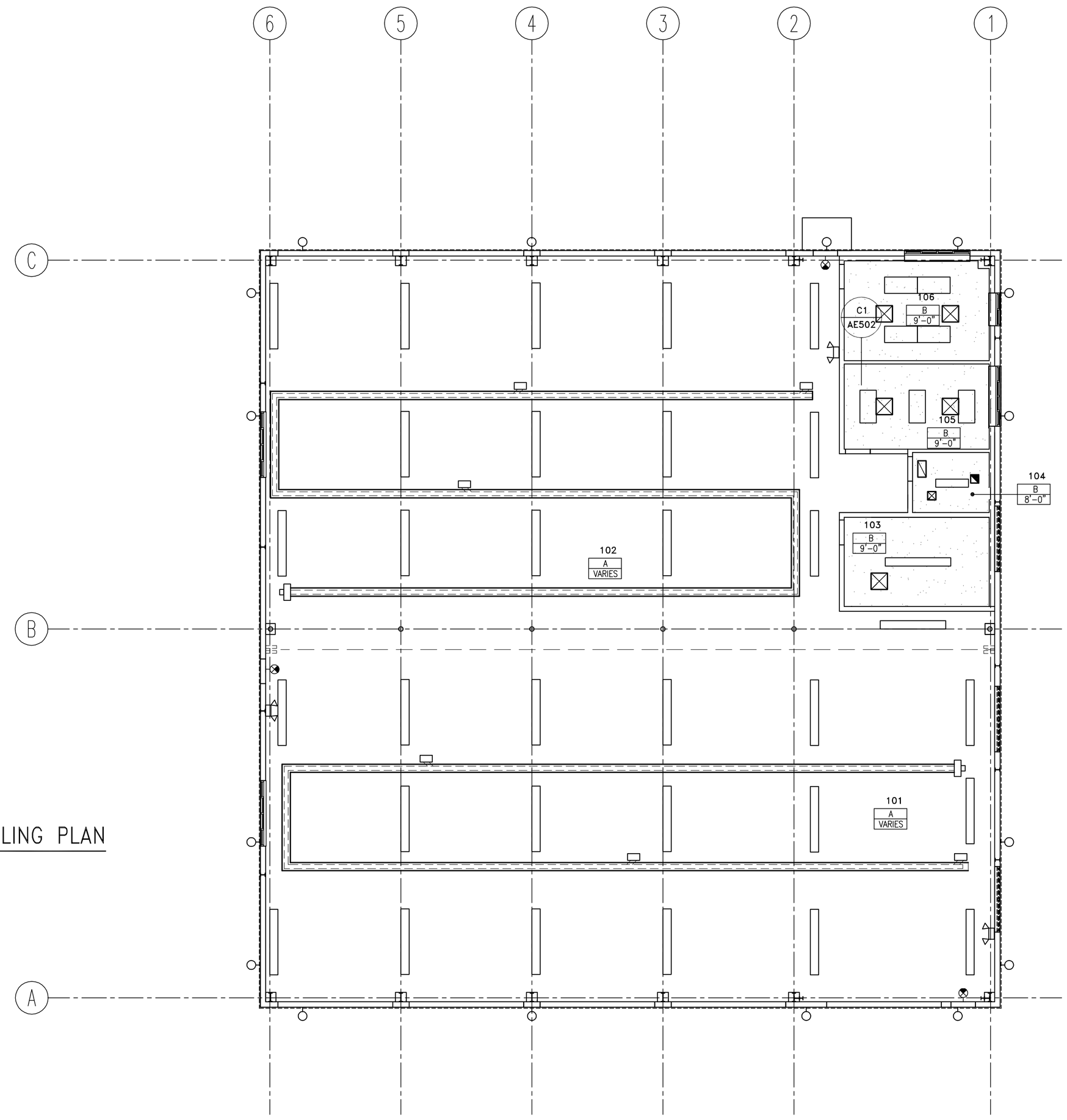

8' 6' 4' 2' 0' 4' 8' 16'

B1 | MECH. MEZZANINE REFLECTED CEILING PLAN

AE121 | REF. SCALE: 1/8" = 1'-0"

A2 | FIRST FLOOR REFLECTED CEILING PLAN

AE121 | REF. SCALE: 1/8" = 1'-0"

8' 6' 4' 2' 0' 4' 8' 16'

PLAN NORTH

REFLECTED CEILING PLAN LEGEND

ROOM # — 131
TYPE — E
ELEVATION A.F.F. — VARIES

TYPE A	EXPOSED STRUCTURE
TYPE B	5/8" GYPSUM BOARD ON METAL SUSPENSION SYSTEM – COLOR TO MATCH WALL

GENERAL NOTES

1. SEE MECHANICAL AND ELECTRICAL DRAWINGS FOR ADDITIONAL LIGHTING AND DIFFUSER INFORMATION.

2. CEILING HEIGHT SHOWN IN ROOM TAG INDICATES HEIGHT OF DOMINANT CEILING FINISH. SEE NOTES FOR ADDITIONAL CEILING FINISH INFORMATION.

3. SEE DETAIL B1/A502 FOR SEISMIC BRACING DETAIL.

CEILING SYMBOLS

- PAINTED GYP. BD. CEILING
- 2' x 4' FLUORESCENT LIGHT FIXTURE, SEE ELECT. DRAWINGS FOR TYPE.
- 1' x 4' FLUORESCENT LIGHT FIXTURE
- 1' x 4' FLUORESCENT LIGHT FIXTURE EMERGENCY LIGHT FIXTURE RE: ELECT.
- 1' x 8' FLUORESCENT LIGHT FIXTURE
- 1' x 8' FLUORESCENT LIGHT FIXTURE EMERGENCY LIGHT FIXTURE RE: ELECT.
- RETURN AIR GRILLE – HORIZONTAL (SEE MECH. DRAWINGS)
- SUPPLY AIR GRILLE – HORIZONTAL (SEE MECH. DRAWINGS)
- RADIANT HEAT SYSTEM (SEE MECH. DRAWINGS)
- EXHAUST FAN (SEE MECH. DRAWINGS)
- EXIT SIGN
- UNIT HEATER (SEE MECH. DRAWINGS)
- EMERGENCY FLOOD LIGHTS
- EXTERIOR WALL MOUNTED LIGHTS

CLIENT

BRIGHAM CITY
MAINTENANCE FACILITY
STATION #1423
1325 EAST HIGHWAY 90
BRIGHAM CITY, UTAH 84302

DESIGNER

ARCHIPLEX GROUP
architecture · planning · design services
1135 South West Temple, Ste. A
Salt Lake City, UT 84101
P:(801) 961-7070
F:(801) 961-7373

CONSULTANTS

PROFESSIONAL SEAL

STATE OF UTAH
RALPH M. STANISLAW
95-310818-0301
LICENSED ARCHITECT

ISSUE

MARK	DATE	DESCRIPTION
	2/15/06	CONSTRUCTION DOCUMENTS
	1/18/06	FINAL REVIEW SET
	12/21/05	DD REVIEW SET
	9/16/05	PRELIMINARY REVIEW SET

DFCM PROJECT NO:	05059900
ARCHIPLEX PROJECT NO:	050013.01
DRAWN BY:	K. PHILLIPS
CHECKED BY:	R. STANISLAW
SCALE:	1/8"=1'-0"
DATE:	FEBRUARY 15, 2006

KEY PLAN

SHEET TITLE

FIRST FLOOR AND MEZZANINE REFLECTED CEILING PLANS

AE121

KEYNOTES

13125.B0 STANDING SEAM METAL ROOF (SLOPE 1:12)
13125.C0 METAL RAIN GUTTER W/DOWNSPOUTS
13125.B1 STANDING SEAM METAL ROOF RIDGE
13125.B2 STANDING SEAM METAL CANOPY

GENERAL NOTES

1. FIELD VERIFY ALL EXISTING CONDITIONS AND THEIR COMPATIBILITY WITH NEW CONSTRUCTION PRIOR TO THE COMMENCEMENT OF WORK. COORDINATE DISCREPANCIES WITH ARCHITECT.

2. DO NOT SCALE DRAWINGS.

3. SEE CIVIL, STRUCTURAL, MECHANICAL AND ELECTRICAL DRAWINGS FOR MORE INFORMATION.

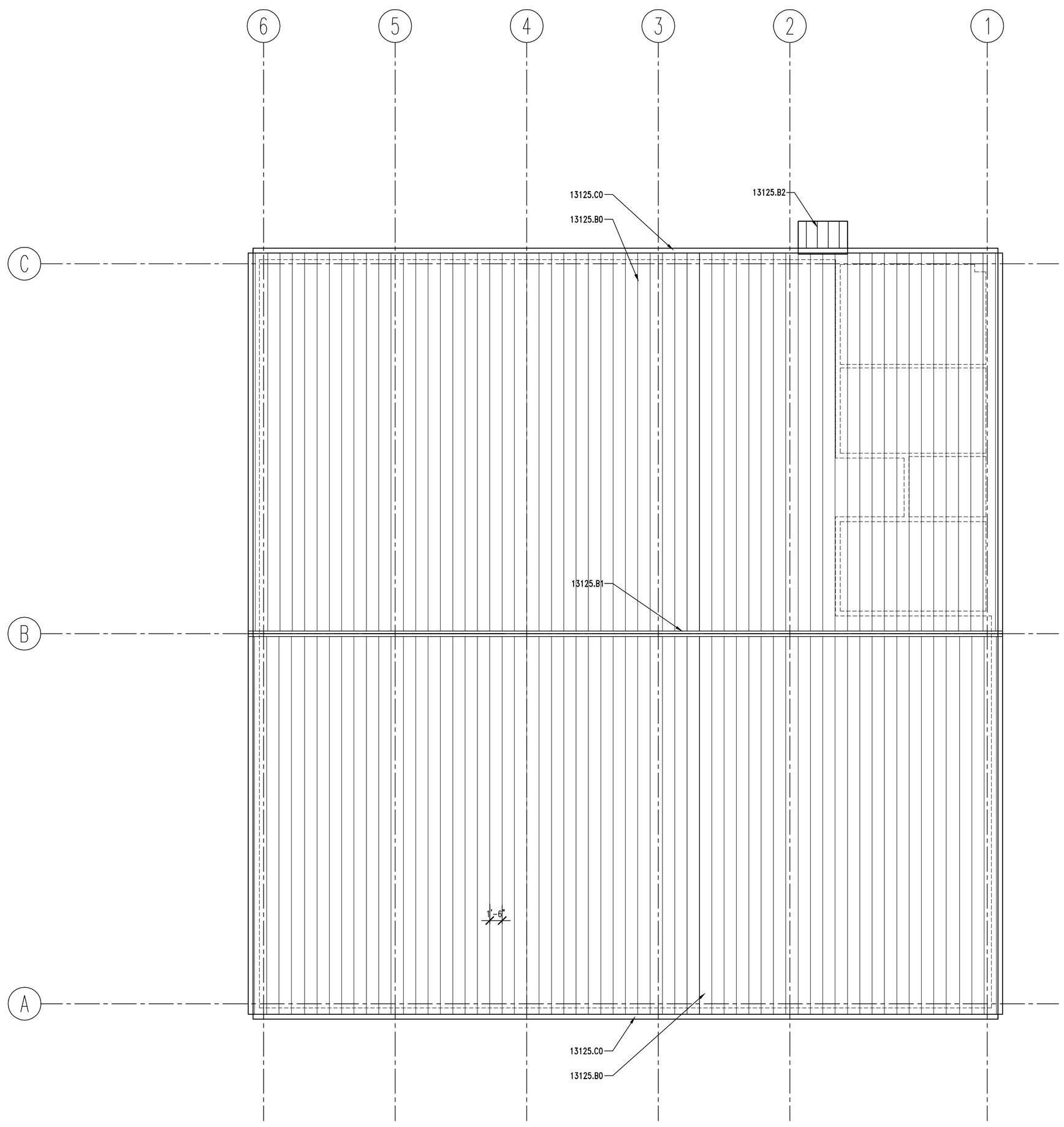

A2 | ROOF PLAN
AE141 | REF.

SCALE: 1/8" = 1'-0"

8' 6' 4' 2' 0' 4' 8' 16'

PLAN NORTH

CLIENT

BRIGHAM CITY
MAINTENANCE FACILITY
STATION #1423
1325 EAST HIGHWAY 90
BRIGHAM CITY, UTAH 84302

DESIGNER

ARCHIPLEX GROUP
architecture · planning · design services
1135 South West Temple, Ste. A
Salt Lake City, UT 84101
P:(801) 961-7070
F:(801) 961-7373

CONSULTANTS

PROFESSIONAL SEAL

STATE OF UTAH
RALPH M. STANISLAW
95-310818-0301
LICENSED ARCHITECT

ISSUE

MARK	DATE	DESCRIPTION
	2/15/06	CONSTRUCTION DOCUMENTS
	1/18/06	FINAL REVIEW SET
	12/21/05	DD REVIEW SET
	9/16/05	PRELIMINARY REVIEW SET

DFCM PROJECT NO:	05059900
ARCHIPLEX PROJECT NO:	050013.01
DRAWN BY:	K. PHILLIPS
CHECKED BY:	R. STANISLAW
SCALE:	1/8"=1'-0"
DATE:	FEBRUARY 15, 2006

KEY PLAN

SHEET TITLE

ROOF PLAN

AE141

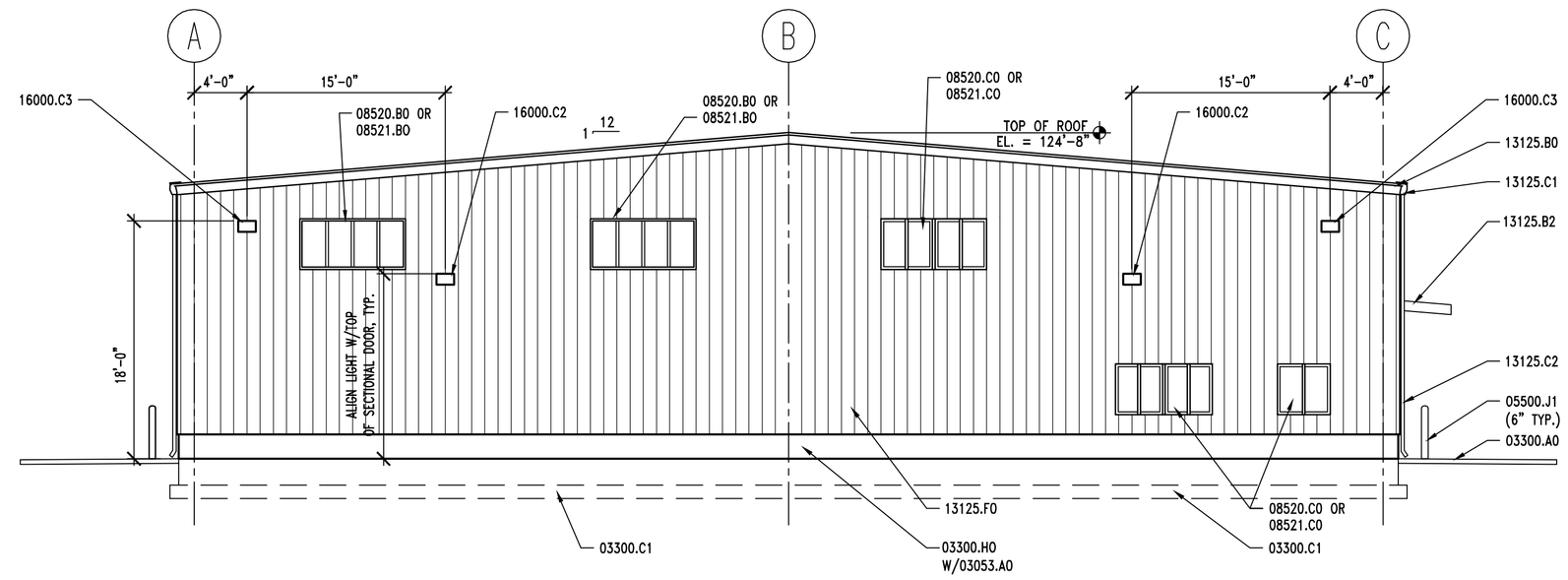

D2 EXTERIOR ELEVATION – WEST

AE201 REF. AE101 SCALE: 1/8" = 1'-0"

8' 6' 4' 2' 0' 4' 8' 16'

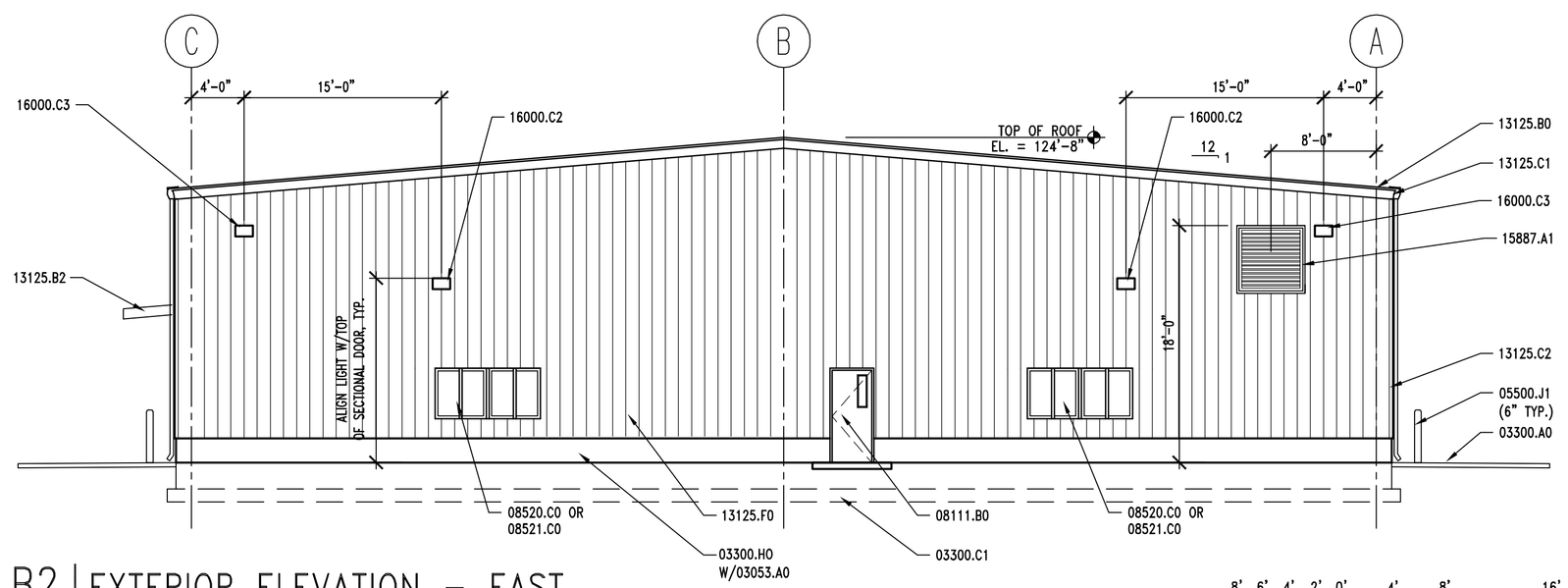

B2 EXTERIOR ELEVATION – EAST

AE201 REF. AE101 SCALE: 1/8" = 1'-0"

8' 6' 4' 2' 0' 4' 8' 16'

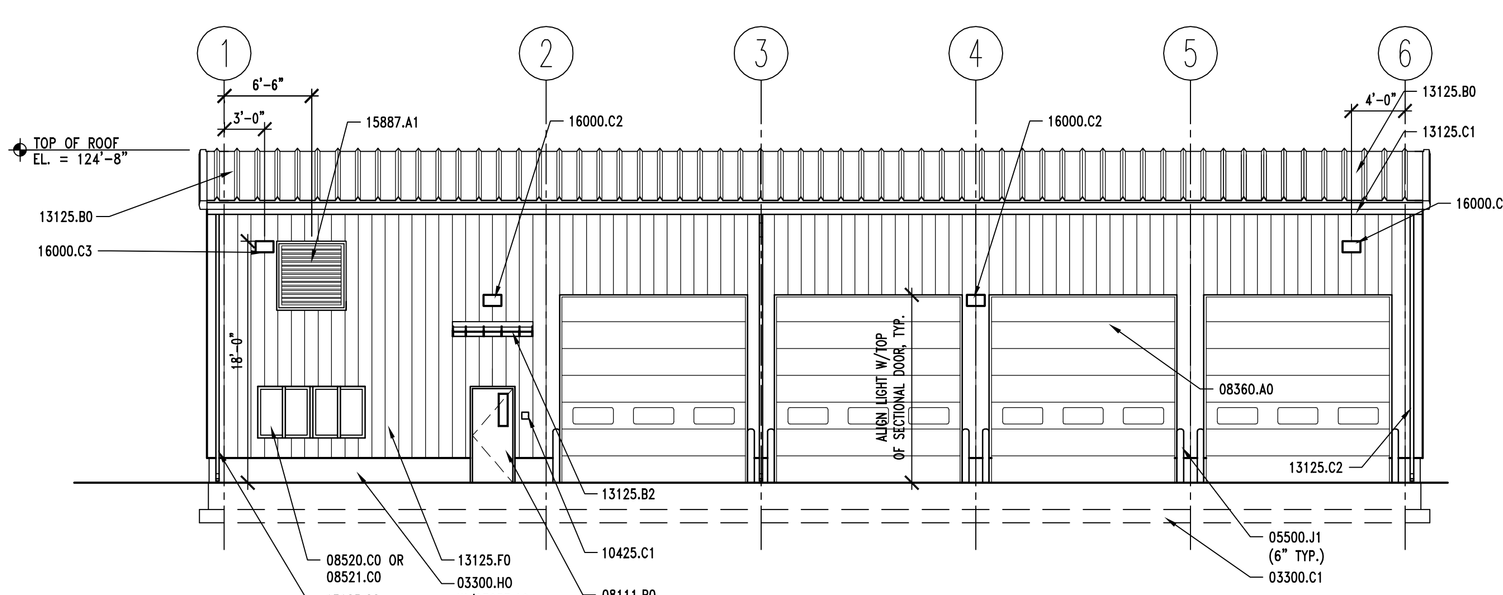

A1 EXTERIOR ELEVATION – SOUTH

AE201 REF. AE101 SCALE: 1/8" = 1'-0"

8' 6' 4' 2' 0' 4' 8' 16'

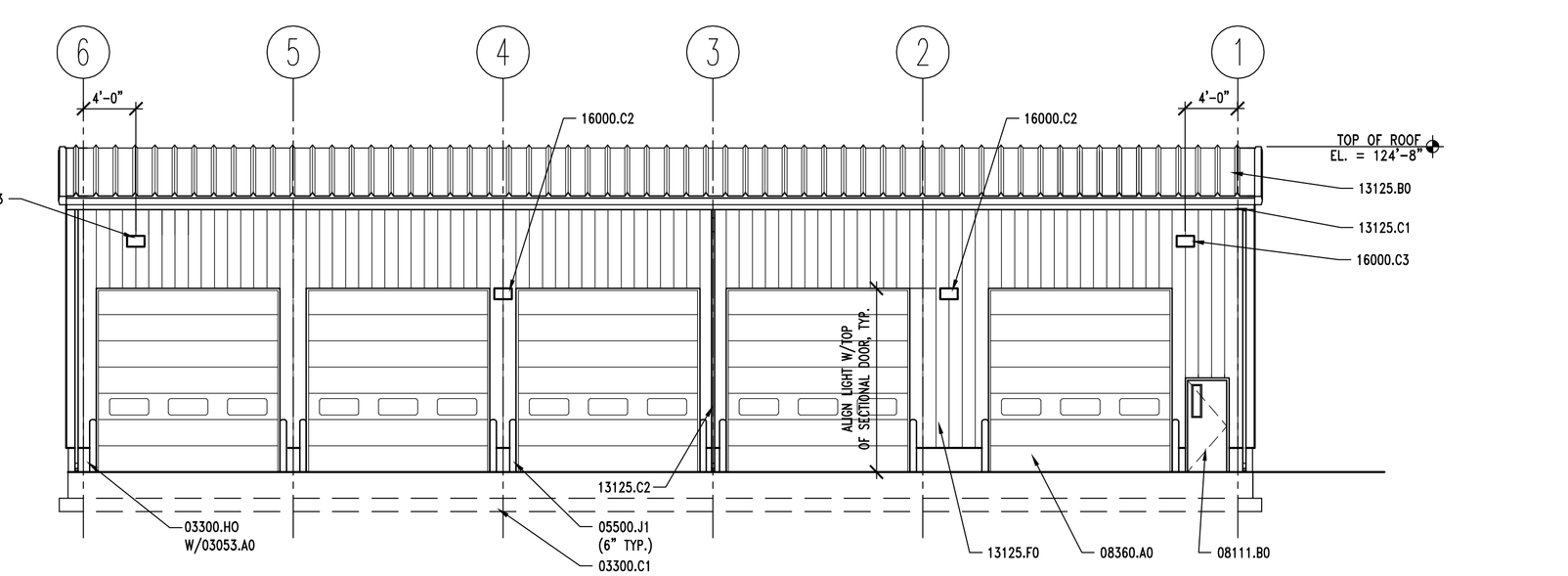

A3 EXTERIOR ELEVATION – NORTH

AE201 REF. AE101 SCALE: 1/8" = 1'-0"

8' 6' 4' 2' 0' 4' 8' 16'

KEYNOTES

03053.A0	CONCRETE WATER PROOFING SYSTEM
03300.A0	CONCRETE SLAB ON GRADE
03300.C1	FOOTING-RE: STRUCTURAL
03300.H0	FOUNDATION WALL, RE: STRUCTURAL
05500.J1	PIPE BOLLARD (DIAMETER) GALV. AND PAINTED
08111.B0	HOLLOW METAL DOOR
08360.A0	OVERHEAD SECTIONAL DOOR
08520.B0	FIXED WINDOW
08520.C0	ALUM. WINDOW W/SLIDING GLASS PANEL
08521.B0	FIXED VINYL WINDOW
08521.C0	VINYL WINDOW W/SLIDING GLASS PANEL
13125.B0	STANDING SEAM METAL ROOF
13125.B2	STANDING SEAM METAL CANOPY
13125.C1	METAL RAIN GUTTER
13125.C2	DOWNSPOUT
13125.F0	METAL WALL PANEL
10425.C1	ACCESSIBLE SIGNAGE
15887.A1	LOUVER W/ BIRD SCREEN
16000.C2	EXTERIOR WALL MOUNTED LIGHTS
16000.C3	EXTERIOR WALL MOUNTED FLOOD LIGHTS

EXTERIOR COLOR SCHEDULE

(13125.B0) METAL ROOF & FASCIA: (USA) DESERT SAND
(13125.F0) METAL WALL PANEL: (USA) LIGHT STONE (BEIGE)
(13125.C2) DOWN SPOUTS: PREFINISHED TO MATCH METAL WALL PANEL
(13125.C2) CORNER TRIM & GUTTER: (USA) CHARCOAL
(08111.B0) DOORS & FRAMES: WHITE
(05500.J1) BOLLARDS: OSHA SAFETY YELLOW
(08520.B0) WINDOW FRAMES: PREFINISHED WHITE

GENERAL NOTES

1. FIELD VERIFY ALL EXISTING CONDITIONS AND THEIR COMPATIBILITY WITH NEW CONSTRUCTION PRIOR TO THE COMMENCEMENT OF WORK. COORDINATE DISCREPANCIES WITH ARCHITECT.

2. DO NOT SCALE DRAWINGS.

3. SEE SHEET AE602 FOR WINDOW TYPES AND DETAILS.

4. SEE CIVIL, STRUCTURAL, MECHANICAL AND ELECTRICAL DRAWINGS FOR MORE INFORMATION.

CLIENT

BRIGHAM CITY
MAINTENANCE FACILITY
STATION #1423
1325 EAST HIGHWAY 90
BRIGHAM CITY, UTAH 84302

DESIGNER

ARCHIPLEX GROUP
architecture · planning · design services
1135 South West Temple, Ste. A
Salt Lake City, UT 84101
P:(801) 961-7070
F:(801) 961-7373

CONSULTANTS

PROFESSIONAL SEAL

STATE OF UTAH
RALPH M. STANISLAW
95-310818-0301
LICENSED ARCHITECT

ISSUE

MARK	DATE	DESCRIPTION
	2/15/06	CONSTRUCTION DOCUMENTS
	1/18/06	FINAL REVIEW SET
	12/21/05	DD REVIEW SET
	9/16/05	PRELIMINARY REVIEW SET

DFCM PROJECT NO:	05059900
ARCHIPLEX PROJECT NO:	050013.01
DRAWN BY:	K. PHILLIPS
CHECKED BY:	R. STANISLAW
SCALE:	1/8"=1'-0"
DATE:	FEBRUARY 15, 2006

KEY PLAN

SHEET TITLE

EXTERIOR ELEVATIONS

AE201

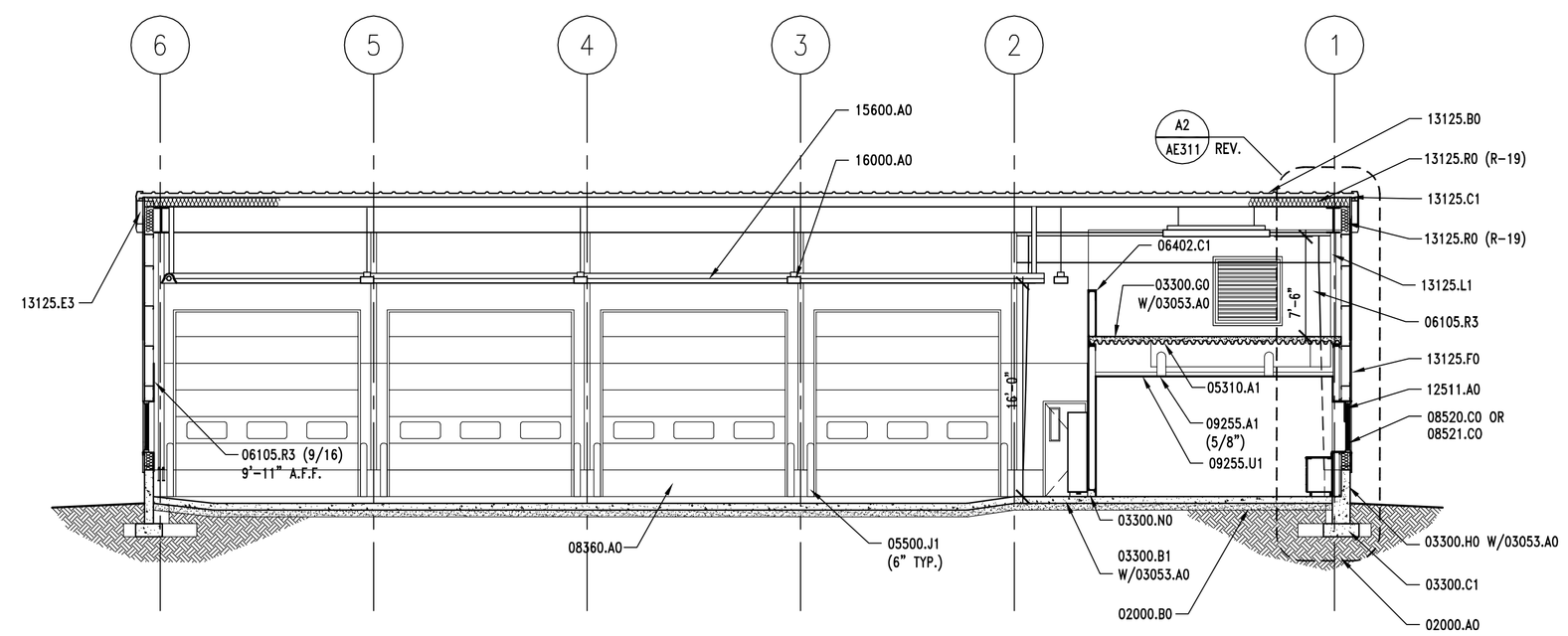

C2 | BUILDING SECTION

AE301 | REF. AE101 SCALE: 1/8" = 1'-0"

8' 6' 4' 2' 0' 4' 8' 16'

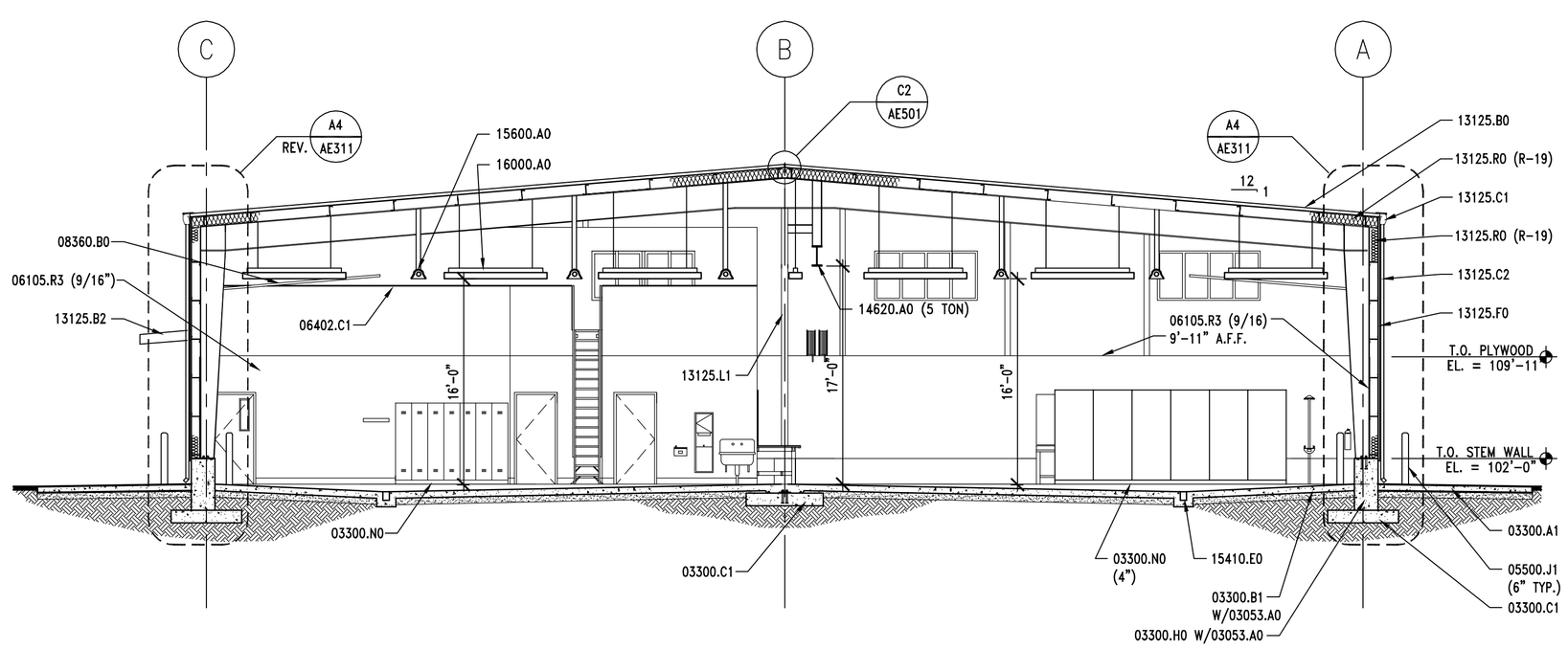

A1 | BUILDING SECTION

AE301 | REF. AE101 SCALE: 1/8" = 1'-0"

8' 6' 4' 2' 0' 4' 8' 16'

KEYNOTES

02000.A0	COMPACTED FILL
02000.B0	GRAVEL BASE
03053.A0	CONCRETE WATER PROOFING SYSTEM
03300.A1	CONCRETE SLAB-ON-GRADE – RE: STRUCTURAL
03300.B1	CONCRETE SLAB – RE:STRUCTURAL
03300.C1	FOOTING–RE: STRUCTURAL
03300.H0	FOUNDATION WALL, RE: STRUCTURAL
03300.G0	CONCRETE OVER METAL DECK – RE:STRUCTURAL
03300.N0	CONCRETE CURB
05310.A1	METAL DECK – RE: STRUCTURAL
05500.J1	PIPE BOLLARD (DIAMETER) GALV. AND PAINTED
06105.R3	G1S A/C PLYWOOD (THICKNESS)
06402.C1	PAINT GRADE WOOD CAP (THICK.)
08360.A0	OVERHEAD SECTIONAL DOOR
08360.B0	DOOR TRACK
08520.C0	ALUM. WINDOW W/SLIDING GLASS PANEL
08521.C0	VINYL WINDOW W/SLIDING GLASS PANEL
09255.A1	GYPSUM BOARD (THICKNESS)
09255.U1	SUSPENDED CEILING SYSTEM
12511.A0	HORIZONTAL LOUVER BLINDS
13125.B0	STANDING SEAM METAL ROOF
13125.B2	STANDING SEAM METAL CANOPY
13125.C1	METAL RAIN GUTTER
13125.C2	DOWNSPOUT
13125.E3	RAKE TRIM
13125.F0	METAL WALL PANEL
13125.L1	STEEL COLUMN – PAINTED
13125.R0	INSULATION & VAPOR BARRIER (R-VALUE)
14620.A0	TROLLEY HOIST (SIZE) – RE: STRUCTURAL
15410.E0	TRENCH DRAIN
15600.A0	NATURAL GAS RADIANT HEATING SYSTEM
16000.A0	INTERIOR LIGHTS

GENERAL NOTES

1. FIELD VERIFY ALL EXISTING CONDITIONS AND THEIR COMPATIBILITY WITH NEW CONSTRUCTION PRIOR TO THE COMMENCEMENT OF WORK. COORDINATE DISCREPANCIES WITH ARCHITECT.

2. DO NOT SCALE DRAWINGS.

3. SEE SHEET AE602 FOR WINDOW TYPES AND DETAILS.

4. SEE CIVIL, STRUCTURAL, MECHANICAL AND ELECTRICAL DRAWINGS FOR MORE INFORMATION.

CLIENT

BRIGHAM CITY
MAINTENANCE FACILITY
STATION #1423
1325 EAST HIGHWAY 90
BRIGHAM CITY, UTAH 84302

DESIGNER

ARCHIPLEX GROUP
architecture · planning · design services
1135 South West Temple, Ste. A
Salt Lake City, UT 84101
P:(801) 961-7070
F:(801) 961-7373

CONSULTANTS

PROFESSIONAL SEAL

STATE OF UTAH
RALPH M. STANISLAW
95-310818-0301
LICENSED ARCHITECT

ISSUE

MARK	DATE	DESCRIPTION
	2/15/06	CONSTRUCTION DOCUMENTS
	1/18/06	FINAL REVIEW SET
	12/21/05	DD REVIEW SET
	9/16/05	PRELIMINARY REVIEW SET

DFCM PROJECT NO:	05059900
ARCHIPLEX PROJECT NO:	050013.01
DRAWN BY:	K. PHILLIPS
CHECKED BY:	R. STANISLAW
SCALE:	1/8"=1'-0"
DATE:	FEBRUARY 15, 2006

KEY PLAN

SHEET TITLE

BUILDING SECTIONS

AE301

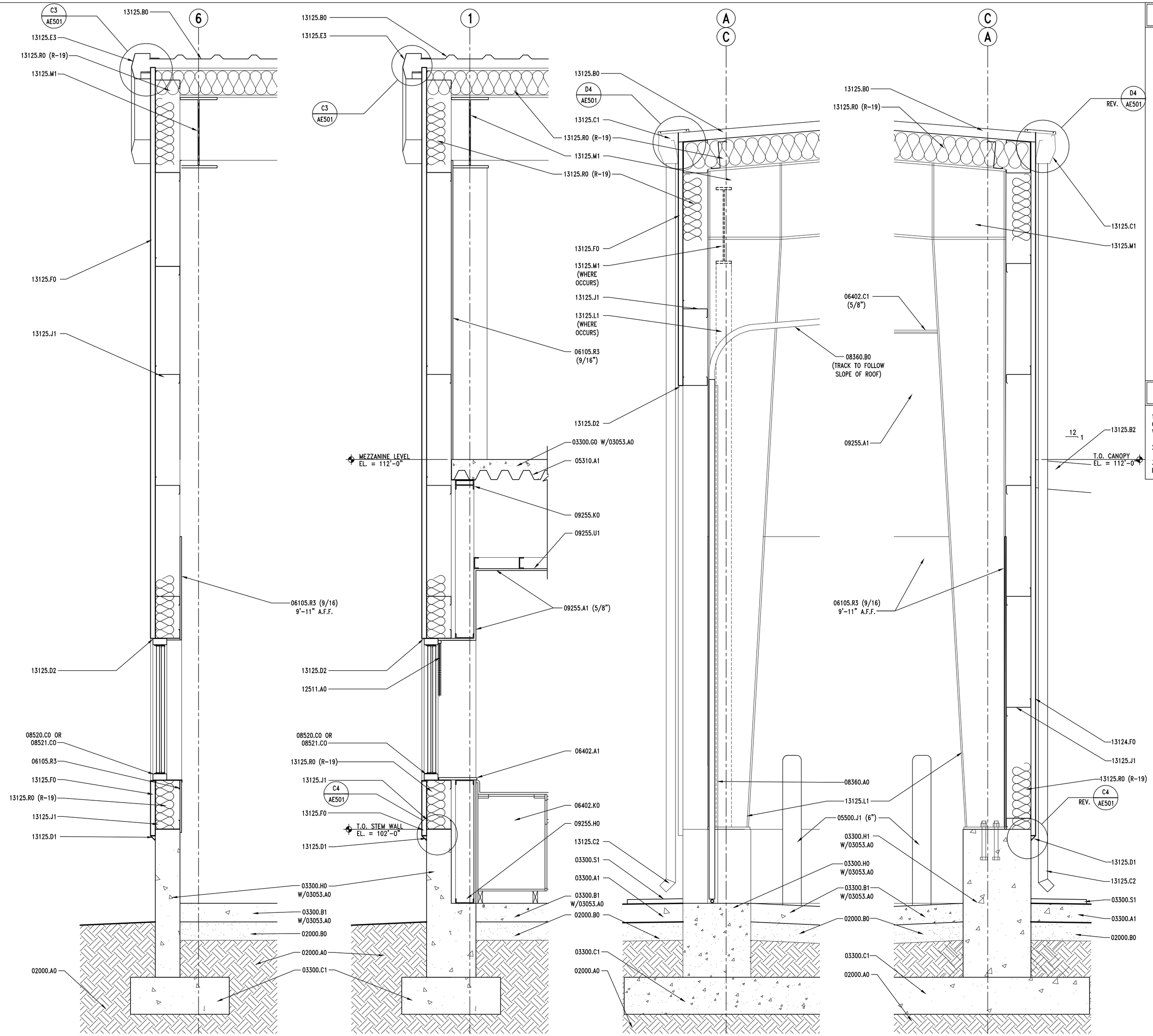

A1 | WALL SECTION

AE311 | REF. AE101, AE301 | SCALE: 3/4" = 1'-0"

A2 | WALL SECTION

AE311 | REF. AE101, AE301 | SCALE: 3/4" = 1'-0"

A3 | WALL SECTION

AE311 | REF. AE101, AE301 | SCALE: 3/4" = 1'-0"

A4 | WALL SECTION

AE311 | REF. AE101, AE301 | SCALE: 3/4" = 1'-0"

KEYNOTES

02000.A0	COMPACTED FILL
02000.B0	GRAVEL BASE
03053.A0	CONCRETE WATER PROOFING SYSTEM
03300.A1	CONCRETE SLAB-ON-GRADE – RE: STRUCTURAL
03300.B1	CONCRETE SLAB – RE:STRUCTURAL
03300.C1	FOOTING–RE: STRUCTURAL
03300.H0	FOUNDATION WALL, RE: STRUCTURAL
03300.H1	CONCRETE PIER, RE: STRUCTURAL
03300.G0	CONCRETE OVER METAL DECK – RE:STRUCTURAL
03300.S1	SPLASH BLOCK
05310.A1	METAL DECK – RE: STRUCTURAL
05500.J1	PIPE BOLLARD (DIAMETER) GALV. AND PAINTED
06105.R3	G1S A/C PLYWOOD (THICKNESS)
06402.A1	3/4" PAINTED WOOD SILL
06402.C1	PAINT GRADE WOOD CAP (THICK.)
06402.K0	BASE UNIT (FINISH)
08360.A0	OVERHEAD SECTIONAL DOOR
08360.B0	DOOR TRACK
08520.C0	ALUM. WINDOW W/SLIDING GLASS PANEL
08521.C0	VINYL WINDOW W/SLIDING GLASS PANEL
09255.A1	GYPSUM BOARD (THICKNESS)
09255.H0	METAL STUD
09255.K0	DOUBLE STUDS
09255.U1	SUSPENDED CEILING SYSTEM
12511.A0	HORIZONTAL LOUVER BLINDS
13125.B0	STANDING SEAM METAL ROOF
13125.B2	STANDING SEAM METAL CANOPY
13125.C1	METAL RAIN GUTTER
13125.C2	DOWNSPOUT
13125.D1	METAL DRIP FLASHING
13125.D2	METAL HEAD FLASHING
13125.E3	RAKE TRIM
13125.F0	METAL WALL PANEL
13125.L1	STEEL COLUMN – PAINTED
13125.M1	STEEL BEAM – PAINTED
13125.J1	STRUCTURAL GIRT
13125.R0	INSULATION & VAPOR BARRIER (R-VALUE)

GENERAL NOTES

1. FIELD VERIFY ALL EXISTING CONDITIONS AND THEIR COMPATIBILITY WITH NEW CONSTRUCTION PRIOR TO THE COMMENCEMENT OF WORK. COORDINATE DISCREPANCIES WITH ARCHITECT.

2. DO NOT SCALE DRAWINGS.

3. SEE CIVIL, STRUCTURAL, MECHANICAL AND ELECTRICAL DRAWINGS FOR MORE INFORMATION.

CLIENT

BRIGHAM CITY
MAINTENANCE FACILITY
STATION #1423
1325 EAST HIGHWAY 90
BRIGHAM CITY, UTAH 84302

DESIGNER

ARCHIPLEX GROUP
architecture · planning · design services
1135 South West Temple, Ste. A
Salt Lake City, UT 84101
P:(801) 961-7070
F:(801) 961-7373

CONSULTANTS

PROFESSIONAL SEAL

STATE OF UTAH
RALPH M. STANISLAW
95-310818-0301
LICENSED ARCHITECT

ISSUE

MARK	DATE	DESCRIPTION
	2/15/06	CONSTRUCTION DOCUMENTS
	1/18/06	FINAL REVIEW SET
	12/21/05	DD REVIEW SET
	9/16/05	PRELIMINARY REVIEW SET

DFCM PROJECT NO:	05059900
ARCHIPLEX PROJECT NO:	050013.01
DRAWN BY:	K. PHILLIPS
CHECKED BY:	R. STANISLAW
SCALE:	1/8"=1'-0"
DATE:	FEBRUARY 15, 2006

KEY PLAN

SHEET TITLE

WALL SECTIONS

AE311

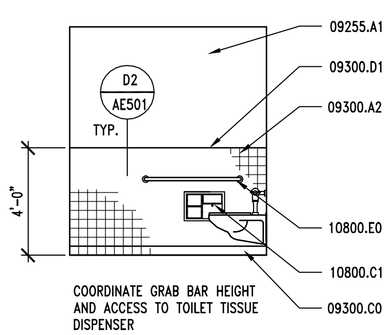

D1 RESTROOM ELEVATION

AE401 REF. AE401 SCALE: 1/4" = 1'-0"

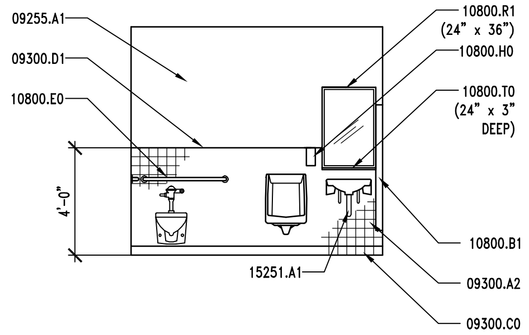

D2 RESTROOM ELEVATION

AE401 REF. AE401 SCALE: 1/4" = 1'-0"

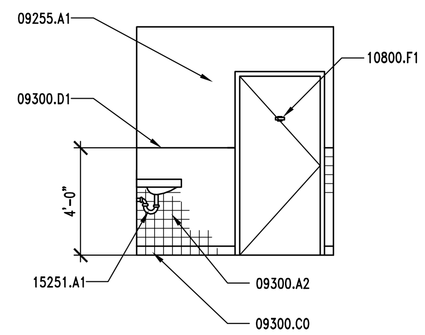

D3 RESTROOM ELEVATION

AE401 REF. AE401 SCALE: 1/4" = 1'-0"

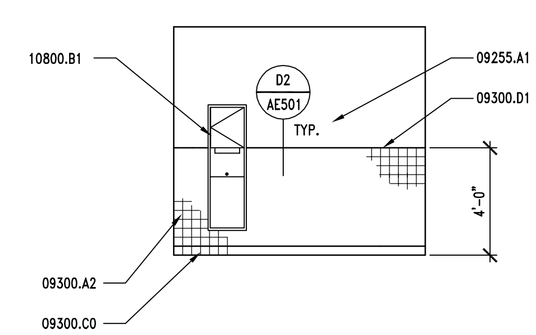

D4 RESTROOM ELEVATION

AE401 REF. AE401 SCALE: 1/4" = 1'-0"

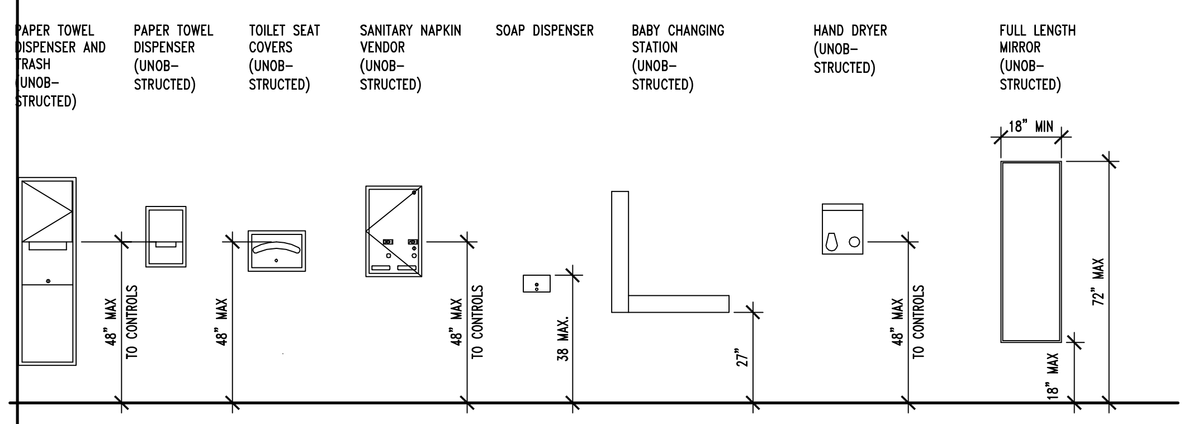

C1 RESTROOM MOUNTING HEIGHTS DETAIL

AE401 REF. AE401 SCALE: 3/8" = 1'-0"

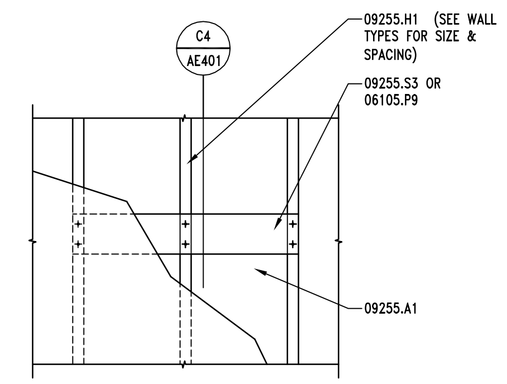

C3 MOUNTING PLATE ELEV.

AE401 REF. AE401 SCALE: 3/4" = 1'-0"

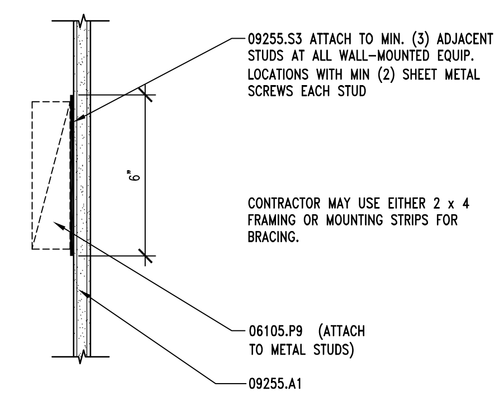

C4 MOUNTING PLATE SECTION

AE401 REF. AE401 SCALE: 3" = 1'-0"

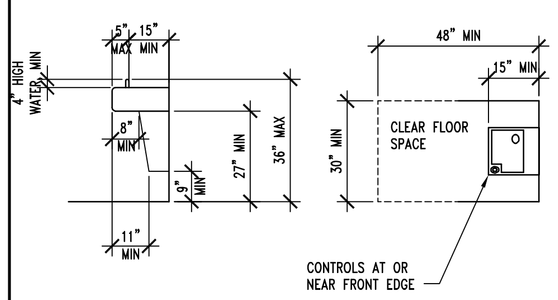

B1 DRINKING FOUNTAIN DETAIL

AE401 REF. AE401 SCALE: 3/8" = 1'-0"

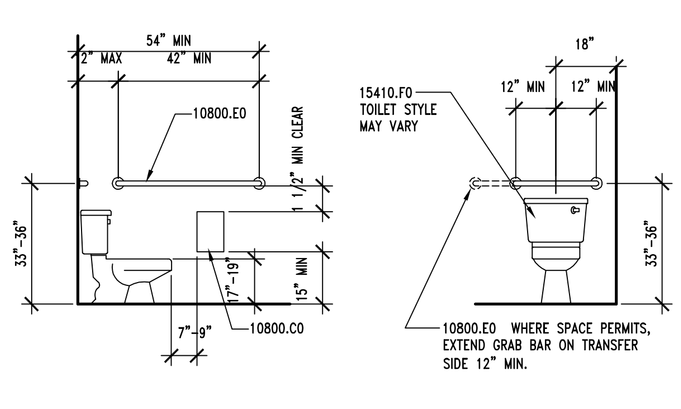

B2 ACCESSIBLE TOILET DETAIL

AE401 REF. AE401 SCALE: 3/8" = 1'-0"

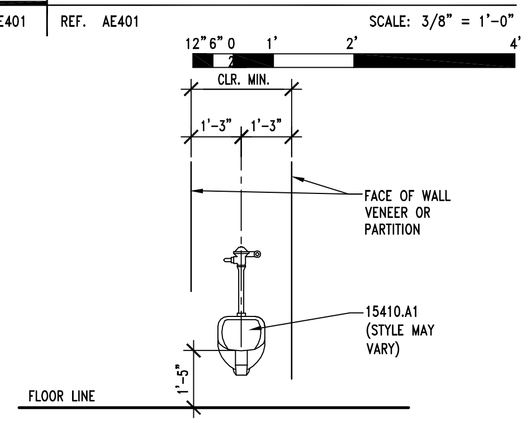

A1 ACCESSIBLE URINAL DETAIL

AE401 REF. AE401 SCALE: 3/8" = 1'-0"

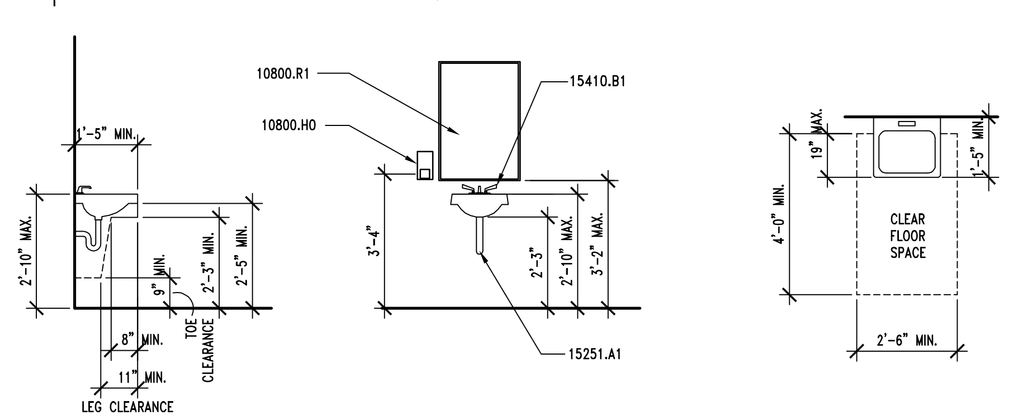

A2 ACCESSIBLE SINK DETAIL

AE401 REF. AE401 SCALE: 3/8" = 1'-0"

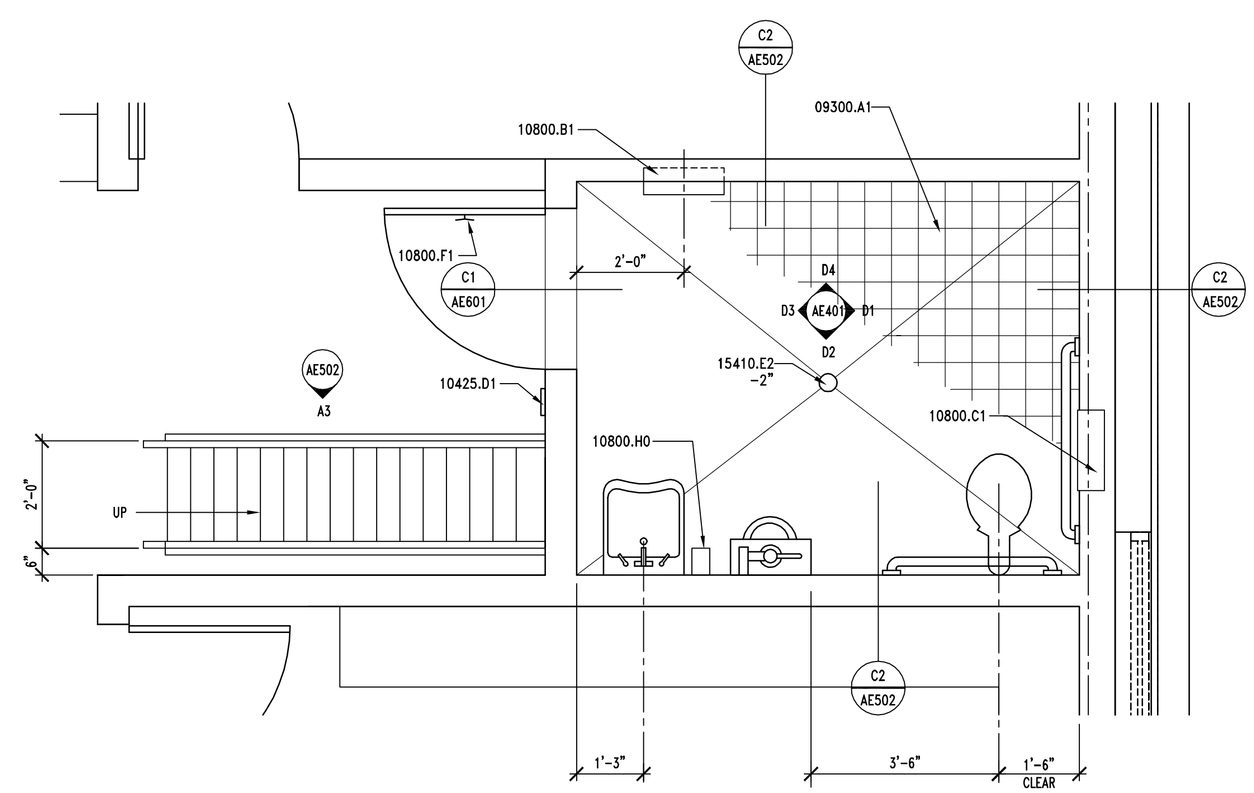

A4 ENLARGED RESTROOM PLAN

AE401 REF. AE101 SCALE: 1/2" = 1'-0"

PLAN NORTH

KEYNOTES

06105.P9 2 x FRAMING, FIRE TREATED

09255.A1 GYPSUM BOARD
09255.H1 METAL STUDS (SIZE, SPACING)
09255.S3 18 GA. METAL MOUNTING STRIPS
09300.A1 UNGLAZED MOSAIC FLOOR TILE TYPE #1
09300.A2 UNGLAZED WALL TILE TYPE #2
09300.C0 TILE BASE
09300.DI BULLNOSE TILE

10425.D1 ACCESSIBLE/UNISEX RESTROOM SIGNAGE
10800.B1 SEMI-RECESSED PAPER TOWEL DISPENSER & WASTE RECEPTACLE
10800.C1 RECESSED TOILET TISSUE DISPENSER/SAN. NAP. DISPOSAL
10800.E0 GRAB BAR
10800.F1 DOUBLE PRONG ROBE HOOK
10800.H0 SOAP DISPENSER
10800.R1 FRAMED MIRROR (SIZE)
10800.T0 METAL SHELF (SIZE)

15251.A1 PIPE INSULATION AT ALL EXPOSED PIPE
15410.A1 URINAL, ACCESSIBLE
15410.B1 SINK FAUCET W/ADA LEVER HANDLES
15410.E2 FLOOR DRAIN

GENERAL NOTES

1. FIELD VERIFY ALL EXISTING CONDITIONS AND THEIR COMPATIBILITY WITH NEW CONSTRUCTION PRIOR TO THE COMMENCEMENT OF WORK. COORDINATE DISCREPANCIES WITH ARCHITECT.

2. DO NOT SCALE DRAWINGS.

3. SEE CIVIL, STRUCTURAL, MECHANICAL AND ELECTRICAL DRAWINGS FOR MORE INFORMATION.

4. PROVIDE BACKING BEHIND ALL SURFACE MOUNTED EQUIPMENT AND/OR FIXTURES PER DETAIL C3/AE401

5. SEE C1/AE401 FOR TYPICAL FIXTURE MOUNTING HEIGHTS.

6. SEE DETAILS A1, A2, B1 & B2/AE401 FOR ADA TYPICAL DETAILS

CLIENT

BRIGHAM CITY
MAINTENANCE FACILITY
STATION #1423
1325 EAST HIGHWAY 90
BRIGHAM CITY, UTAH 84302

DESIGNER

ARCHIPLEX GROUP
architecture · planning · design services
1135 South West Temple, Ste. A
Salt Lake City, UT 84101
P:(801) 961-7070
F:(801) 961-7373

CONSULTANTS

PROFESSIONAL SEAL

STATE OF UTAH
RALPH M. STANISLAW
95-310818-0301
LICENSED ARCHITECT

ISSUE

MARK	DATE	DESCRIPTION
	2/15/06	CONSTRUCTION DOCUMENTS
	1/18/06	FINAL REVIEW SET
	12/21/05	DD REVIEW SET
	9/16/05	PRELIMINARY REVIEW SET

DFCM PROJECT NO:	05059900
ARCHIPLEX PROJECT NO:	050013.01
DRAWN BY:	K. PHILLIPS
CHECKED BY:	R. STANISLAW
SCALE:	AS SHOWN
DATE:	FEBRUARY 15, 2006

KEY PLAN

SHEET TITLE

ENLARGED RESTROOM FLOOR PLAN, INTERIOR ELEVATIONS AND DETAILS

AE401

GENERAL NOTES

1. FIELD VERIFY ALL EXISTING CONDITIONS AND THEIR COMPATIBILITY WITH NEW CONSTRUCTION PRIOR TO THE COMMENCEMENT OF WORK. COORDINATE DISCREPANCIES WITH ARCHITECT.

2. DO NOT SCALE DRAWINGS.

3. SEE CIVIL, STRUCTURAL, MECHANICAL AND ELECTRICAL DRAWINGS FOR MORE INFORMATION.

4. PROVIDE QUANTITY OF ADJUSTABLE SHELVING AS SHOWN IN ELEVATION.

5. SEE SHEET AE602 FOR PLASTIC LAMINATE COLORS.

KEYNOTES

03053.A0	CONCRETE WATER PROOFING SYSTEM
03300.A1	CONCRETE SLAB-ON-GRADE - RE: STRUCTURAL
03300.H1	CONCRETE PIER, RE: STRUCTURAL
03300.N0	CONCRETE CURB (HEIGHT)
05500.J1	PIPE BOLLARD (DIAMETER) - GALV. & PAINTED
06105.R3	G1S A/C PLYWOOD (THICKNESS)
06105.V6	PEGBOARD (THICKNESS)
06402.H1	ADJUSTABLE SHELVES
06402.K0	BASE UNIT (FINISH)
06402.K3	BASE UNIT WITH DRAWERS (FINISH)
06402.X0	WORKBENCH
08111.B0	HOLLOW METAL DOOR
08360.A0	OVERHEAD SECTIONAL DOOR
10500.A0	METAL LOCKERS
10500.B0	METAL STORAGE CABINETS
10522.A0	FIRE EXTINGUISHER
10800.B1	SEMI-RECESSED PAPER TOWEL DISPENSER & WASTE RECEPTACLE
10800.D0	MOP RACK
13125.L1	STEEL COLUMN - PAINTED
15410.C0	UTILITY SINK
15410.E0	TRENCH DRAIN
15412.A0	EMERGENCY SHOWER & EYE WASH
15452.A1	DRINKING FOUNTAIN
15491.A0	AIR COMPRESSOR
15491.C0	OVERHEAD HOSE REELS
15600.A0	NATURAL GAS RADIANT HEATING SYSTEM
16000.A0	INTERIOR LIGHTS

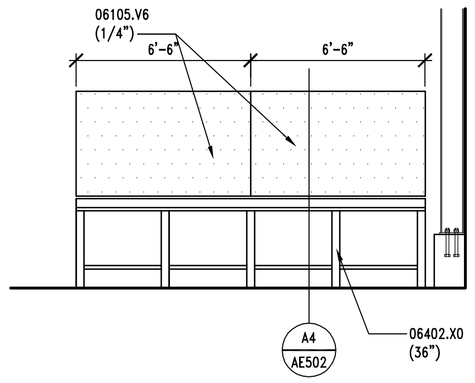

D1 INTERIOR ELEVATION

AE402 | REF. AE402 | SCALE: 1/4" = 1'-0"

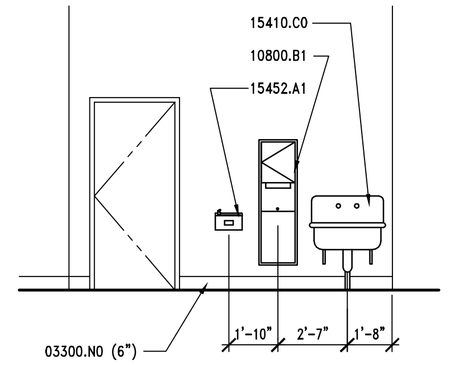

D2 INTERIOR ELEVATION

AE402 | REF. AE101 | SCALE: 1/4" = 1'-0"

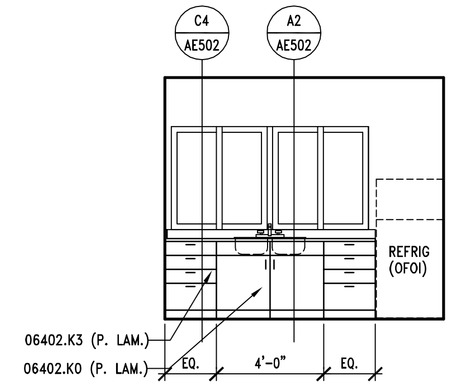

D3 INTERIOR ELEVATION

AE402 | REF. AE101 | SCALE: 1/4" = 1'-0"

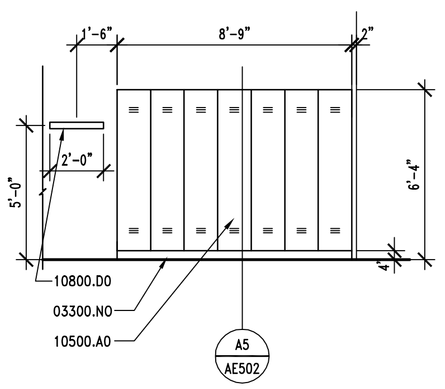

C1 LOCKER ELEVATION

AE402 | REF. AE101 | SCALE: 1/4" = 1'-0"

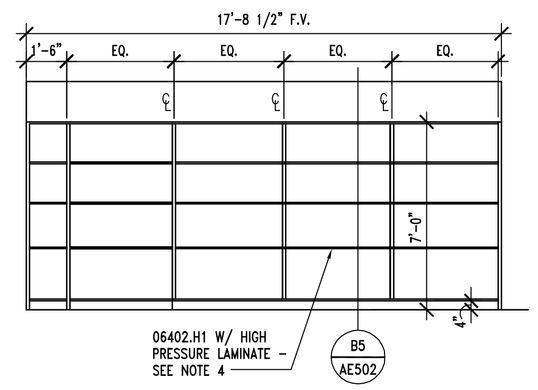

C2 TYP. SHELVING ELEVATION

AE402 | REF. AE101 | SCALE: 1/4" = 1'-0"

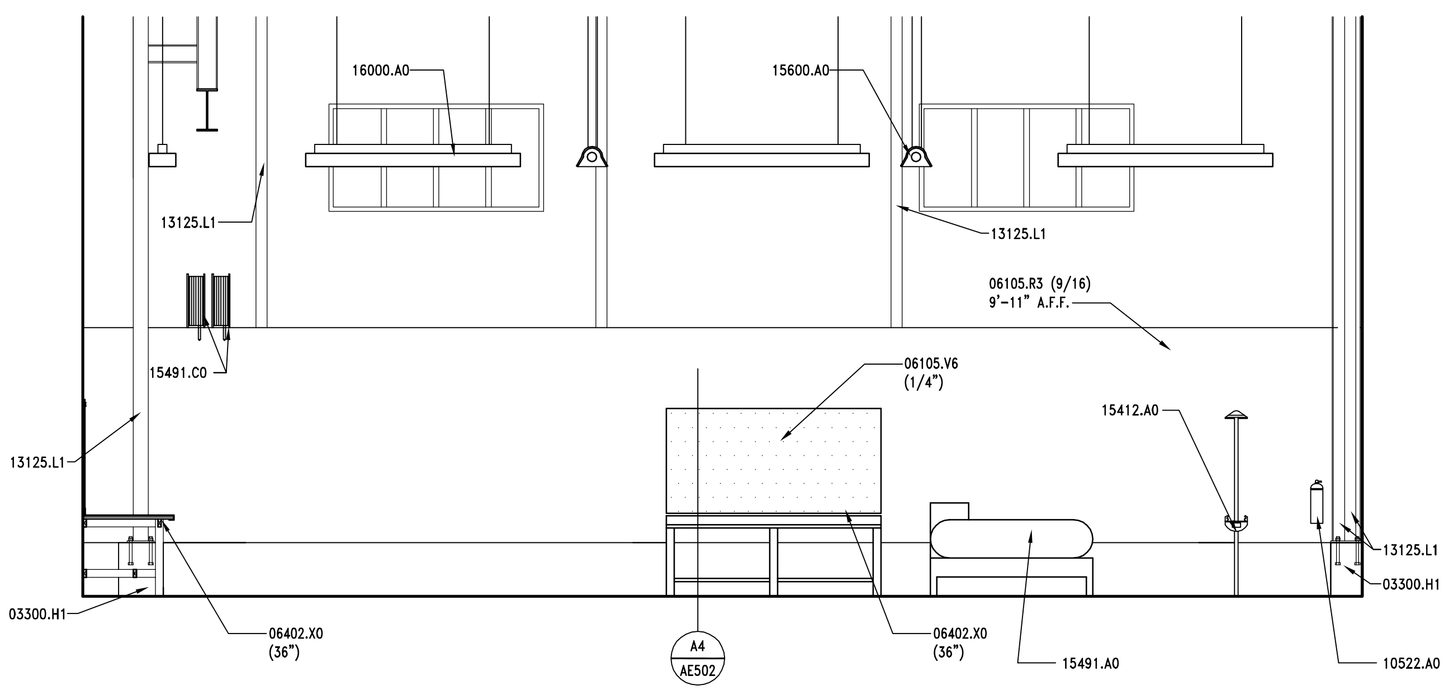

A1 INTERIOR ELEVATION

AE402 | REF. AE402 | SCALE: 1/4" = 1'-0"

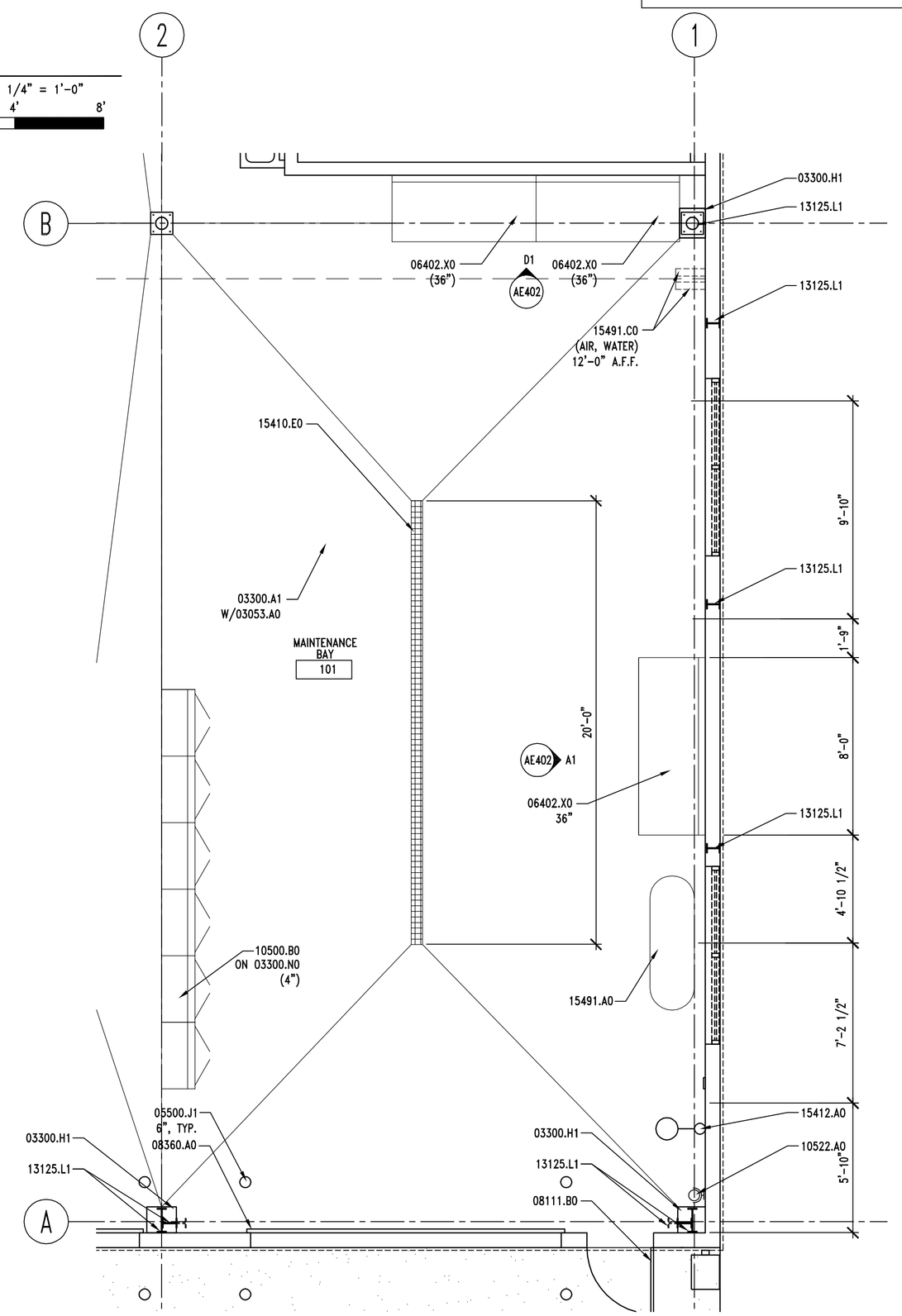

A4 ENLARGED MAINTENANCE BAY

AE402 | REF. AE101 | SCALE: 1/4" = 1'-0"

PLAN NORTH

CLIENT

BRIGHAM CITY
MAINTENANCE FACILITY
STATION #1423
1325 EAST HIGHWAY 90
BRIGHAM CITY, UTAH 84302

DESIGNER

ARCHIPLEX GROUP
architecture · planning · design services
1135 South West Temple, Ste. A
Salt Lake City, UT 84101
P:(801) 961-7070
F:(801) 961-7373

CONSULTANTS

PROFESSIONAL SEAL

STATE OF UTAH
RALPH M. STANISLAW
95-310818-0301
LICENSED ARCHITECT

ISSUE

MARK	DATE	DESCRIPTION
	2/15/06	CONSTRUCTION DOCUMENTS
	1/18/06	FINAL REVIEW SET
	12/21/05	DD REVIEW SET
	9/16/05	PRELIMINARY REVIEW SET

DFCM PROJECT NO:	05059900
ARCHIPLEX PROJECT NO:	050013.01
DRAWN BY:	K. PHILLIPS
CHECKED BY:	R. STANISLAW
SCALE:	AS SHOWN
DATE:	FEBRUARY 15, 2006

KEY PLAN

SHEET TITLE

ENLARGED MAINTENANCE BAY AND INTERIOR ELEVATIONS

AE402

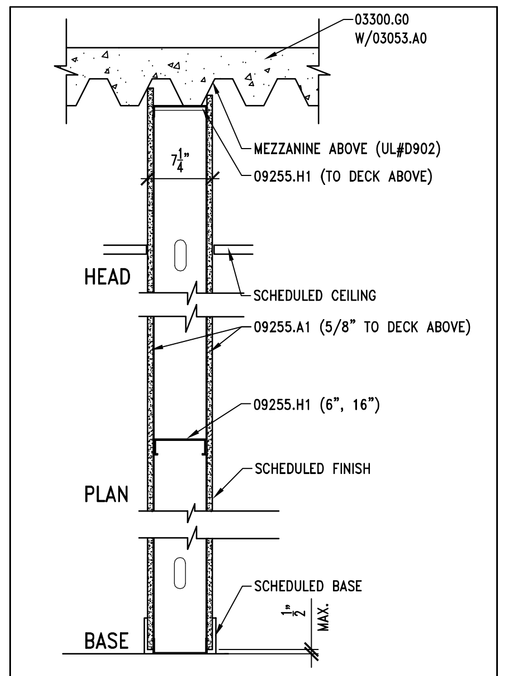

TYPE	OVERALL THICKNESS	STUD/ BLOCK SIZE	FIRE RATING	U.L. LISTING	S.T.C. RATING
G	AS NOTED	6"	N.R.	---	---

COMMENT

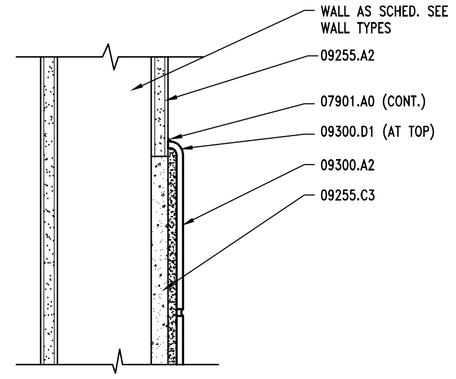

D2 | BULLNOSE TILE DETAIL

AE501 | REF. AE401 | SCALE: 3" = 1'-0"

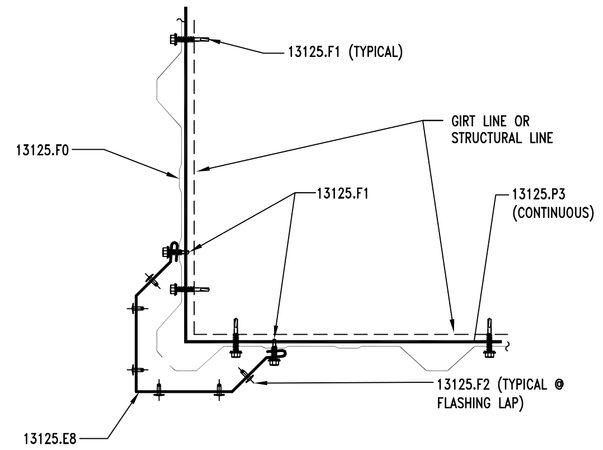

D3 | CORNER FLASHING DETAIL

AE501 | REF. AE101 | SCALE: 3" = 1'-0"

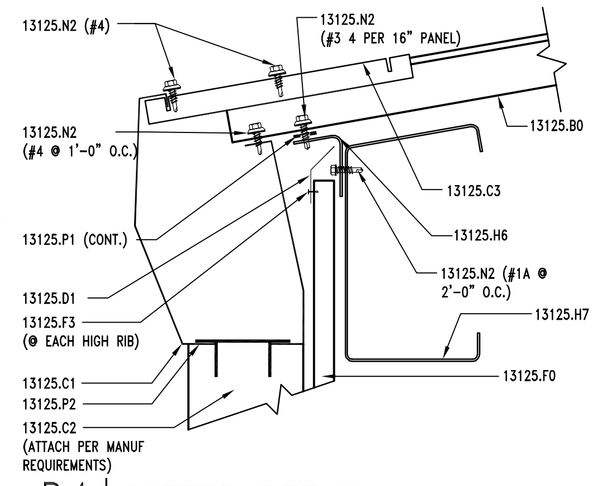

D4 | GUTTER DETAIL

AE501 | REF. AE311 | SCALE: 3" = 1'-0"

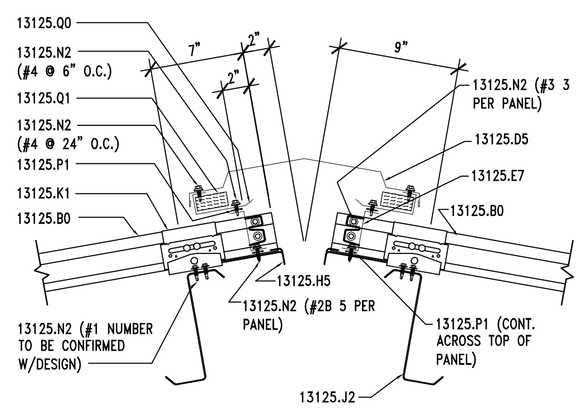

C2 | RIDGE VENT DETAIL

AE501 | REF. AE301 | SCALE: 1 1/2" = 1'-0"

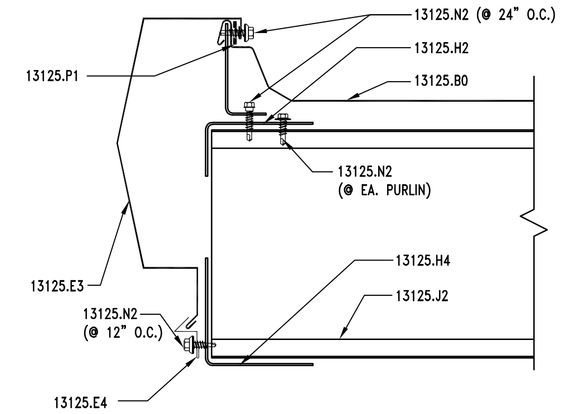

C3 | STARTING RAKE DETAIL

AE501 | REF. AE311 | SCALE: 3" = 1'-0"

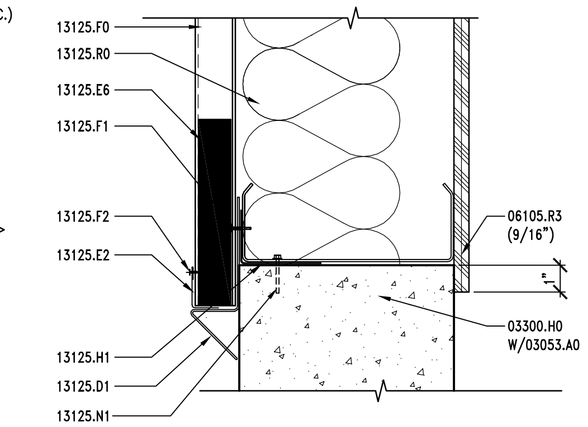

C4 | WALL PANEL @ STEM WALL

AE501 | REF. AE311 | SCALE: 3" = 1'-0"

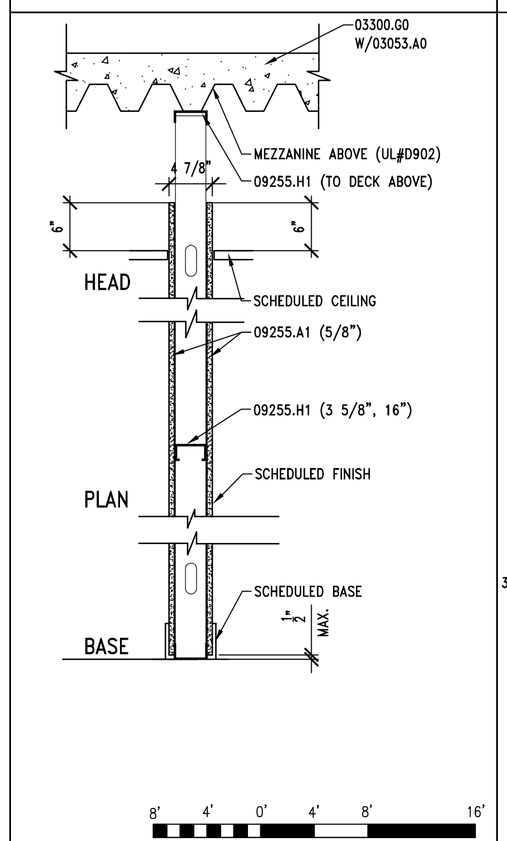

TYPE	OVERALL THICKNESS	STUD/ BLOCK SIZE	FIRE RATING	U.L. LISTING	S.T.C. RATING
A	AS NOTED	3 5/8"	N.R.	---	---

COMMENT

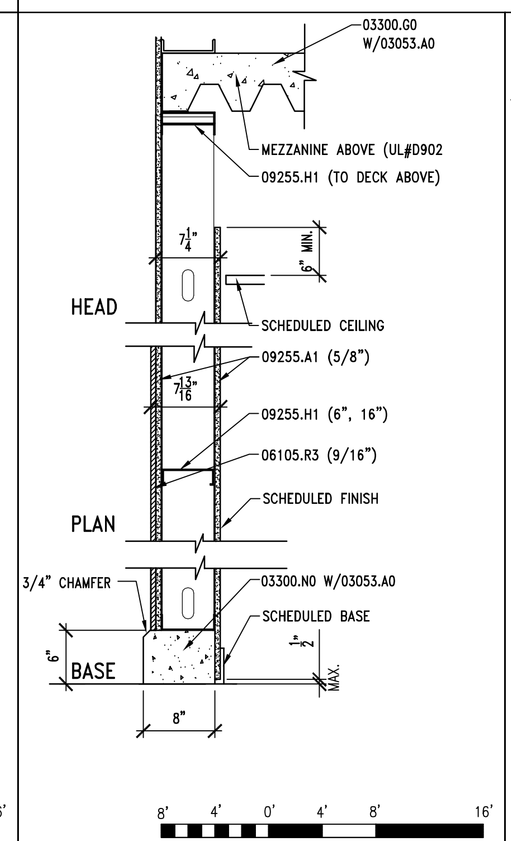

TYPE	OVERALL THICKNESS	STUD/ BLOCK SIZE	FIRE RATING	U.L. LISTING	S.T.C. RATING
B	AS NOTED	6"	N.R.	---	---

COMMENT

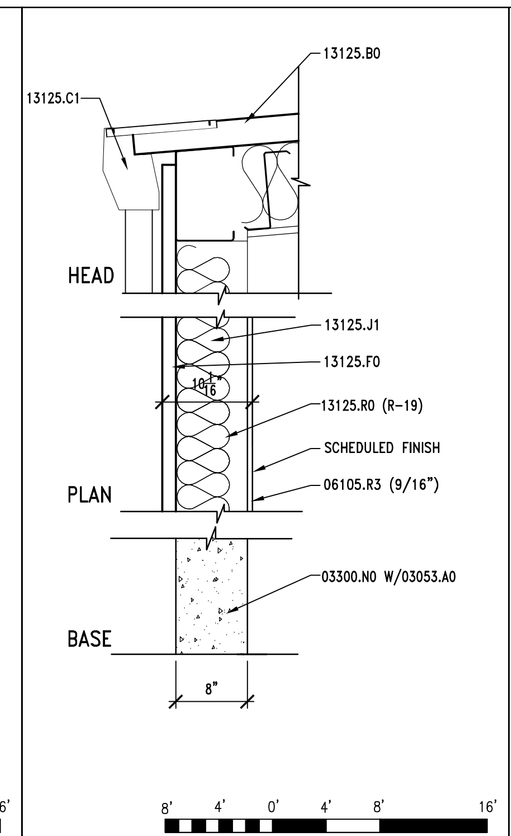

TYPE	OVERALL THICKNESS	STUD/ BLOCK SIZE	FIRE RATING	U.L. LISTING	S.T.C. RATING
C	AS NOTED	–	N.R.	---	---

COMMENT

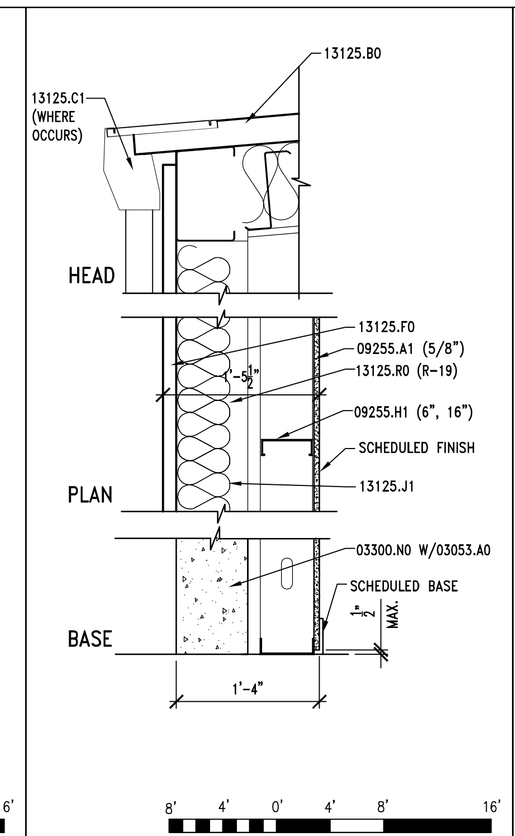

TYPE	OVERALL THICKNESS	STUD/ BLOCK SIZE	FIRE RATING	U.L. LISTING	S.T.C. RATING
D	AS NOTED	–	N.R.	---	---

COMMENT

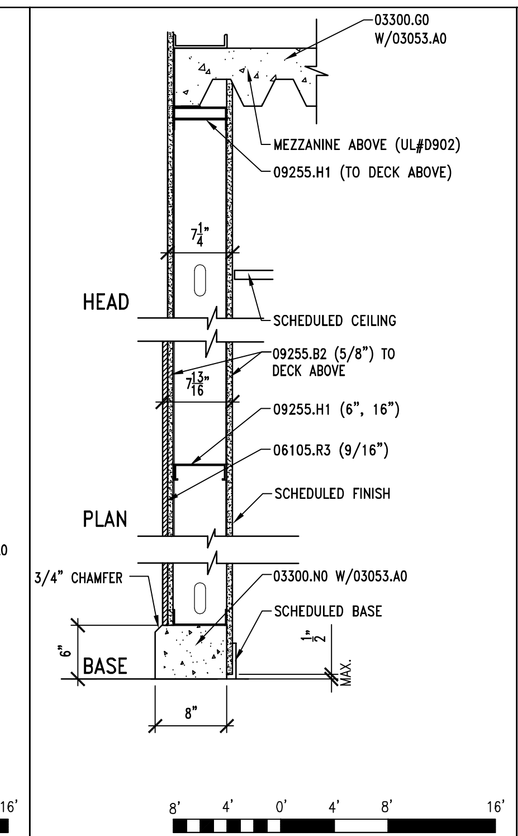

TYPE	OVERALL THICKNESS	STUD/ BLOCK SIZE	FIRE RATING	U.L. LISTING	S.T.C. RATING
E	AS NOTED	6"	1 HR.	UL419	---

COMMENT

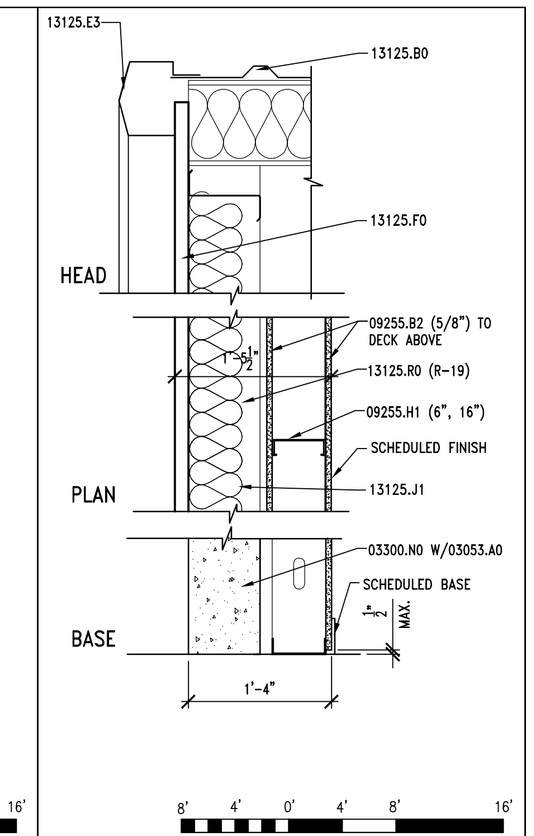

TYPE	OVERALL THICKNESS	STUD/ BLOCK SIZE	FIRE RATING	U.L. LISTING	S.T.C. RATING
F	AS NOTED	–	1 HR.	UL419	---

COMMENT

A1 | WALL TYPES

AE501 | REF. AE101 | SCALE: 1" = 1'-0"

KEYNOTES

03053.A0	CONCRETE WATER PROOFING SYSTEM
03300.A1	CONCRETE SLAB ON GRADE – RE: STRUCTURAL
03300.G0	CONCRETE OVER METAL DECK – RE:STRUCTURAL
03300.H0	FOUNDATION WALL, RE: STRUCTURAL
03300.K1	18" DIA. CONCRETE PIPE BASE
03300.L1	30# FELT
03300.N0	CONCRETE CURB
06105.R3	G1S A/C PLYWOOD (THICKNESS)
07901.A0	SEALANT
09255.A1	GYPSUM BOARD (THICKNESS)
09255.A2	WATER RESISTANT GYPSUM BOARD (THICKNESS)
09255.B2	TYPE 'X' GYPSUM BOARD (THICKNESS)
09255.C3	CEMENT BOARD
09255.H1	METAL STUDS (SIZE, SPACING)
09300.A2	TILE GLAZED WALL-TILE TYPE #2
09300.D1	BULLNOSE TRIM UNIT
13125.B0	STANDING SEAM METAL ROOF
13125.C1	METAL RAIN GUTTER
13125.C2	DOWNSPOUT
13125.C3	GUTTER STRAP, INSTALL AT EVERY OTHER PANEL RIB
13125.D1	METAL DRIP FLASHING
13125.D5	RIDGE FLASHING, TO MATCH ROOF PANELS
13125.E2	PANEL TRIM
13125.E3	RAKE TRIM
13125.E4	RAKE SLIDE
13125.E6	WALL CLOSURE
13125.E7	METAL OUTSIDE CLOSURE
13125.E8	CORNER TRIM
13125.F0	METAL WALL PANEL
13125.F1	METAL WALL FASTENER
13125.F2	BLIND RIVET
13125.F3	POP RIVET
13125.H1	METAL ANGLE
13125.H2	HIGH RAKE SUPPORT ANGLE
13125.H4	4" x 4" CONT. ANGLE
13125.H5	BACKUP PLATE ANGLE
13125.H6	EAVE SUPPORT ANGLE
13125.H7	EAVE STRUT
13125.J1	STRUCTURAL GIRT
13125.J2	PURLIN
13125.K1	LOW PANEL CLIP
13125.N1	ANCHOR
13125.N2	FASTENER (SPACING)
13125.P1	DOUBLE BEAD TAPE SEALER
13125.P2	SEALANT
13125.P3	THERMAL BREAK
13125.Q0	METAL VENT
13125.Q1	VENT MATERIAL
13125.R0	INSULATION & VAPOR BARRIER (R-VALUE)

GENERAL NOTES

1. FIELD VERIFY ALL EXISTING CONDITIONS AND THEIR COMPATIBILITY WITH NEW CONSTRUCTION PRIOR TO THE COMMENCEMENT OF WORK. COORDINATE DISCREPANCIES WITH ARCHITECT.

2. DO NOT SCALE DRAWINGS.

3. SEE CIVIL, STRUCTURAL, MECHANICAL AND ELECTRICAL DRAWINGS FOR MORE INFORMATION.

CLIENT

BRIGHAM CITY
MAINTENANCE FACILITY
STATION #1423
1325 EAST HIGHWAY 90
BRIGHAM CITY, UTAH 84302

DESIGNER

ARCHIPLEX GROUP
architecture · planning · design services
1135 South West Temple, Ste. A
Salt Lake City, UT 84101
P:(801) 961-7070
F:(801) 961-7373

CONSULTANTS

PROFESSIONAL SEAL

STATE OF UTAH
RALPH M. STANISLAW
95-310818-0301
LICENSED ARCHITECT

ISSUE

MARK	DATE	DESCRIPTION
	2/15/06	CONSTRUCTION DOCUMENTS
	1/18/06	FINAL REVIEW SET
	12/21/05	DD REVIEW SET
	9/16/05	PRELIMINARY REVIEW SET

DFCM PROJECT NO:	05059900
ARCHIPLEX PROJECT NO:	050013.01
DRAWN BY:	K. PHILLIPS
CHECKED BY:	R. STANISLAW
SCALE:	AS SHOWN
DATE:	FEBRUARY 15, 2006

KEY PLAN

SHEET TITLE

WALL TYPES AND MISC. DETAILS

AE501

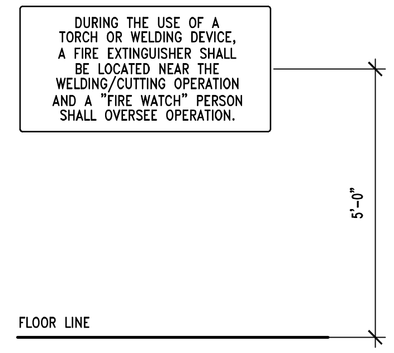

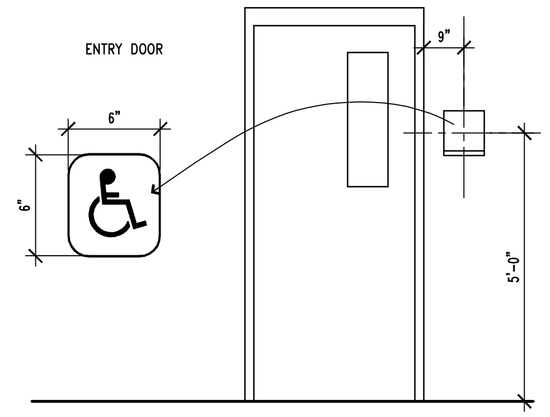

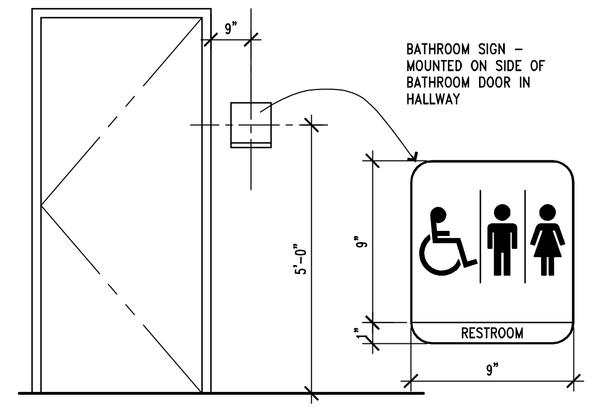

RE: SPECIFICATION – 10425 FOR MORE INFORMATION

D2 | SIGNAGE "B"

AE502 | REF. AE101 | SCALE: NO SCALE

RE: SPECIFICATION – 10425 FOR INFO.

D3 | SIGNAGE "C"

AE502 | REF. AE101 | SCALE: NO SCALE

RE: SPECIFICATION – 10425 FOR INFO.

D4 | SIGNAGE "D"

AE502 | REF. AE101 | SCALE: NO SCALE

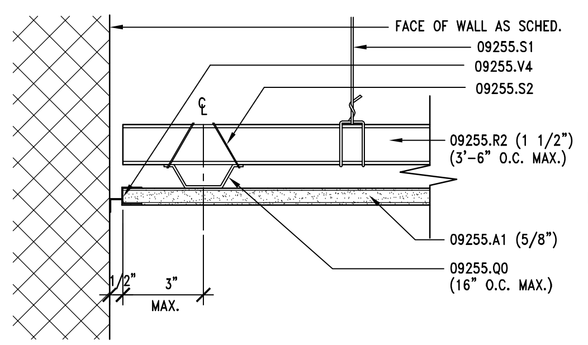

C1 | CEILING DETAIL

AE502 | REF. AE502 | SCALE: 1/2" = 1'-0"

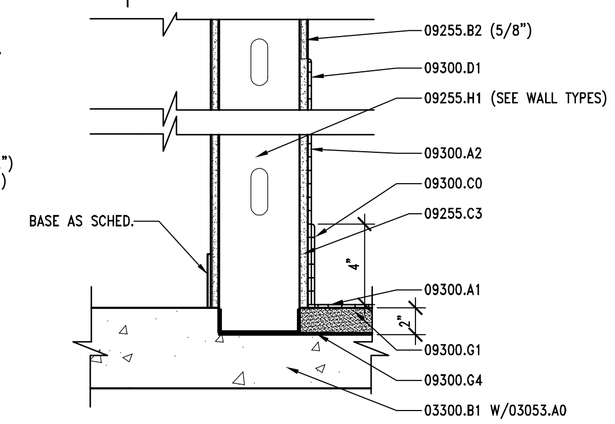

C2 | TILE/TILE BASE DETAIL

AE502 | REF. AE401 | SCALE: 1 1/2" = 1'-0"

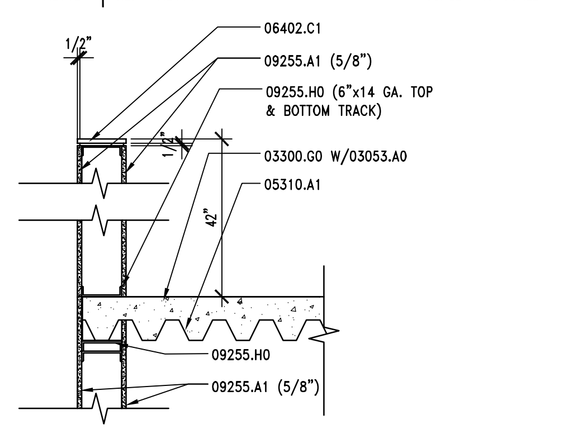

C3 | LOW PARTITION WALL DTL.

AE502 | REF. AE101 | SCALE: 3/4" = 1'-0"

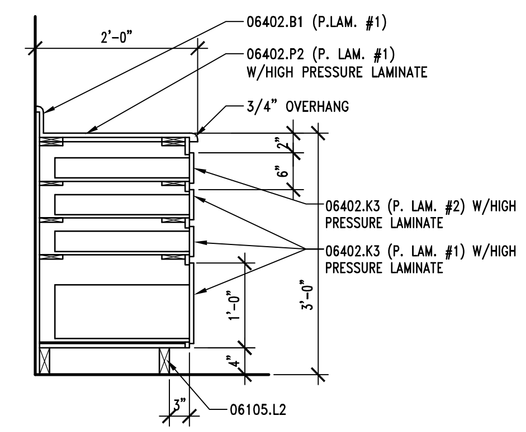

C4 | BASE CABINET SECTION

AE502 | REF. AE402 | SCALE: 3/4" = 1'-0"

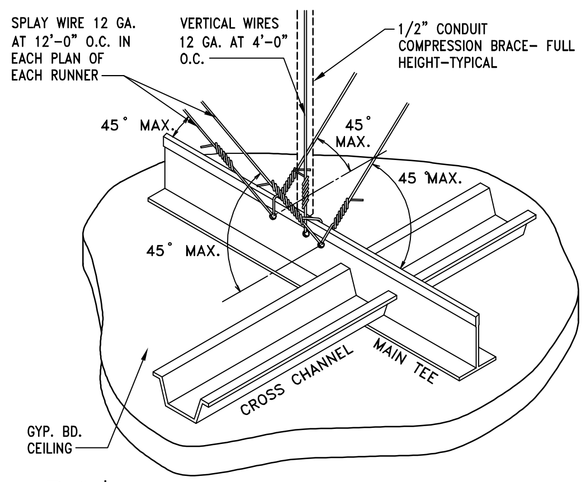

B1 | SEISMIC BRACING DETAIL

AE502 | REF. AE121 | SCALE: NONE

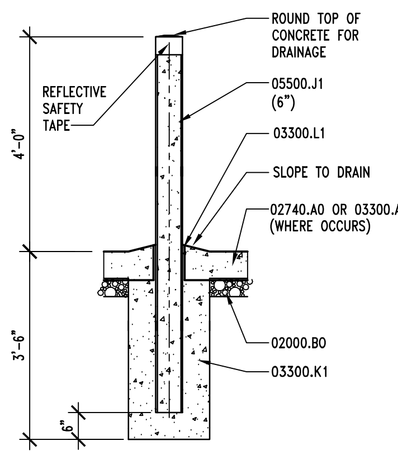

B2 | PIPE BOLLARD DETAIL

AE502 | REF. AE101, AE402 | SCALE: 1/2" = 1'-0"

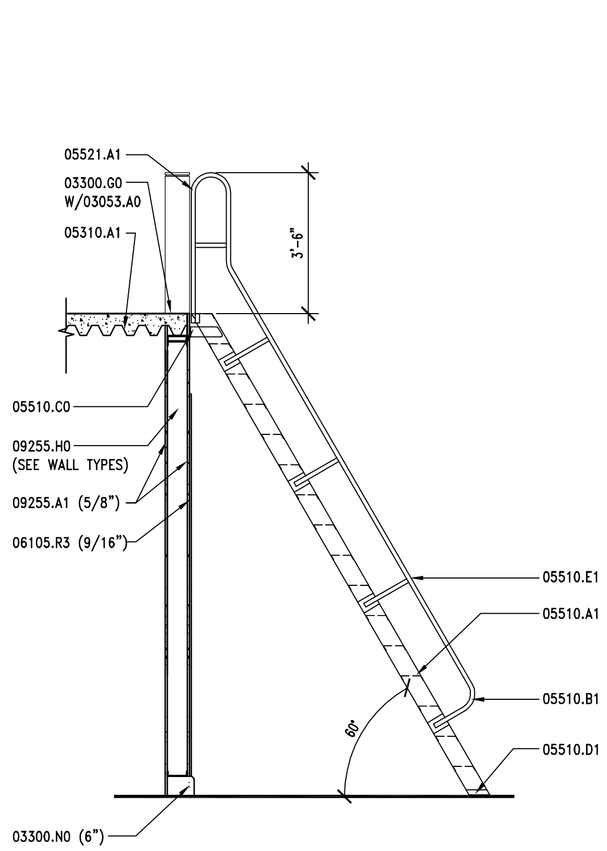

A3 | SHIPS LADDER DETAIL

AE502 | REF. AE401 | SCALE: 3/8" = 1'-0"

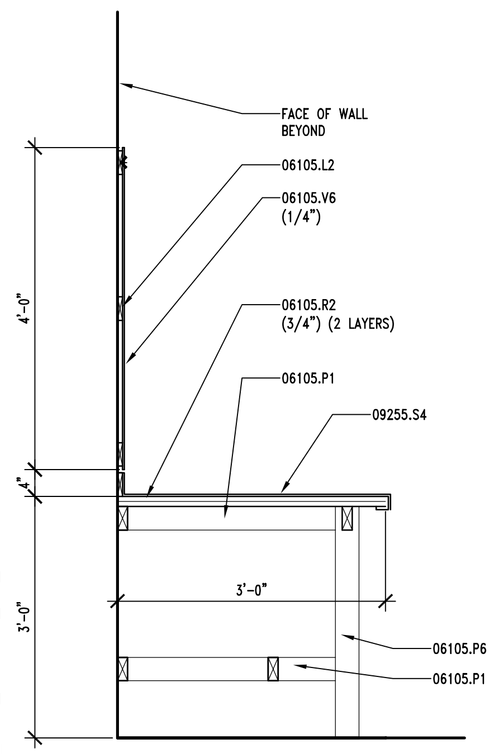

A4 | WORK BENCH SECTION

AE502 | REF. AE402 | SCALE: 3/4" = 1'-0"

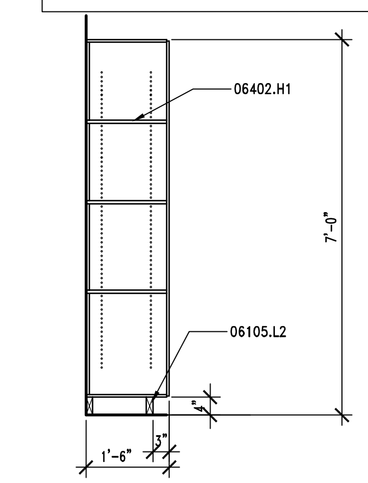

B5 | SHELVING SECTION

AE502 | REF. AE502 | SCALE: 1/2" = 1'-0"

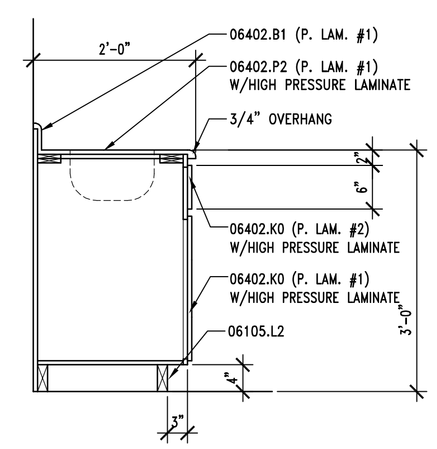

A2 | BASE CABINET SECTION

AE502 | REF. AE402 | SCALE: 3/4" = 1'-0"

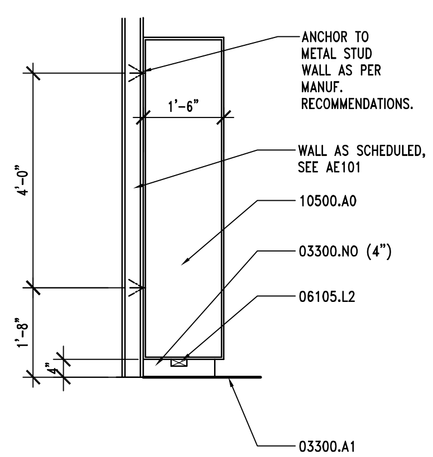

A5 | LOCKER SECTION

AE502 | REF. AE402 | SCALE: 1/2" = 1'-0"

KEYNOTES

02000.B0	GRAVEL BASE
02740.A0	ASPHALTIC CONCRETE PAVING
03053.A0	CONCRETE WATER PROOFING SYSTEM
03300.A1	CONCRETE SLAB-ON-GRADE – RE: STRUCTURAL
03300.B1	CONCRETE SLAB – RE:STRUCTURAL
03300.D0	CONCRETE PAD (SIZE)
03300.G0	CONCRETE OVER METAL DECK – RE:STRUCTURAL
03300.K1	18" DIA. CONCRETE PIPE BASE
03300.L1	30# FELT
03300.N0	CONCRETE CURB (HEIGHT)
05310.A1	METAL DECK – RE: STRUCTURAL
05500.J1	PIPE BOLLARD (DIAMETER) – GALV. & PAINTED
05510.A1	LADDER RUNGS
05510.B1	LADDER RAILS
05510.C0	LADDER MOUNTING BRACKET
05510.D1	RUBBER SHOE AT BOTTOM OF EACH RAIL
05510.E1	1 1/2" O.D. HANDRAILING
05521.A1	1 1/2" O.D. STEEL GUARDRAIL
06105.L2	BLOCKING AS REQUIRED
06105.P1	2 x 4
06105.P6	4 x 4
06105.R2	SHEATHING – PLYWOOD (THICKNESS) GRADE (SIZE)
06105.V6	PEGBOARD (THICKNESS)
06105.R3	G1S A/C PLYWOOD (THICKNESS)
06402.B1	PLASTIC LAMINATE BACKSPLASH (HEIGHT)
06402.C1	PAINT GRADE WOOD CAP (THICK.)
06402.H1	ADJUSTABLE SHELVES
06402.K0	BASE UNIT (FINISH)
06402.K3	BASE UNIT WITH DRAWERS (FINISH)
06402.P2	COUNTERTOP – P. LAM. ON 3/4" PLYWOOD
09255.A1	GYPSUM BOARD (THICKNESS)
09255.B2	TYPE "X" GYPSUM BOARD (THICKNESS)
09255.C3	CEMENT BOARD
09255.H0	METAL STUD
09255.H1	METAL STUDS, (SIZE, SPACING)
09255.Q0	7/8" METAL FURRING CHANNEL
09255.R2	CHANNEL (SIZE, SPACING)
09255.S1	8 GA. WIRE HANGERS
09255.S2	18 GA. WIRE TIES
09255.S4	14 GA. STAINLESS STEEL COUNTER TOP
09255.V4	VINYL TRIM
09300.A1	TILE UNGLAZED CERAMIC MOSAIC-TILE TYPE#1
09300.A2	TILE GLAZED WALL-TILE TYPE #2
09300.C0	TILE BASE
09300.D1	BULLNOSE TRIM UNIT
09300.G1	MORTAR BED
09300.G4	WATERPROOF MEMBRANE
10500.A0	METAL LOCKERS

GENERAL NOTES

1. FIELD VERIFY ALL EXISTING CONDITIONS AND THEIR COMPATIBILITY WITH NEW CONSTRUCTION PRIOR TO THE COMMENCEMENT OF WORK. COORDINATE DISCREPANCIES WITH ARCHITECT.
2. DO NOT SCALE DRAWINGS.
3. SEE SHEET AE602 FOR PLASTIC LAMINATE COLORS.

CLIENT

BRIGHAM CITY MAINTENANCE FACILITY
STATION #1423
1325 EAST HIGHWAY 90
BRIGHAM CITY, UTAH 84302

DESIGNER

ARCHIPLEX GROUP
architecture · planning · design services
1135 South West Temple, Ste. A
Salt Lake City, UT 84101
P:(801) 961-7070
F:(801) 961-7373

CONSULTANTS

PROFESSIONAL SEAL

STATE OF UTAH
RALPH M. STANISLAW
95-310818-0301
LICENSED ARCHITECT

ISSUE

MARK	DATE	DESCRIPTION
	2/15/06	CONSTRUCTION DOCUMENTS
	1/18/06	FINAL REVIEW SET
	12/21/05	DD REVIEW SET
	9/16/05	PRELIMINARY REVIEW SET

DFCM PROJECT NO:	05059900
ARCHIPLEX PROJECT NO:	050013.01
DRAWN BY:	K. PHILLIPS
CHECKED BY:	R. STANISLAW
SCALE:	AS SHOWN
DATE:	FEBRUARY 15, 2006

KEY PLAN

SHEET TITLE

SIGNAGE AND MISC. DETAILS

AE502

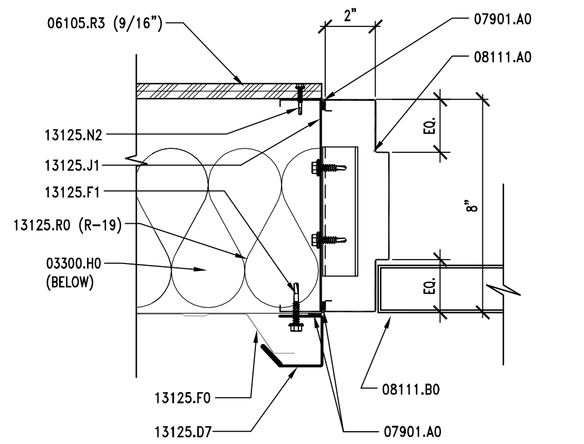

D1 | DOOR JAMB DETAIL

AE601 REF. AE601 SCALE: 3" = 1'-0"

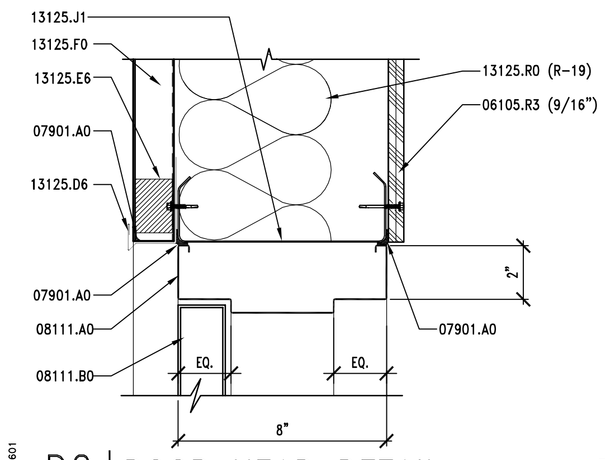

D2 | DOOR HEAD DETAIL

AE601 REF. AE601 SCALE: 3" = 1'-0"

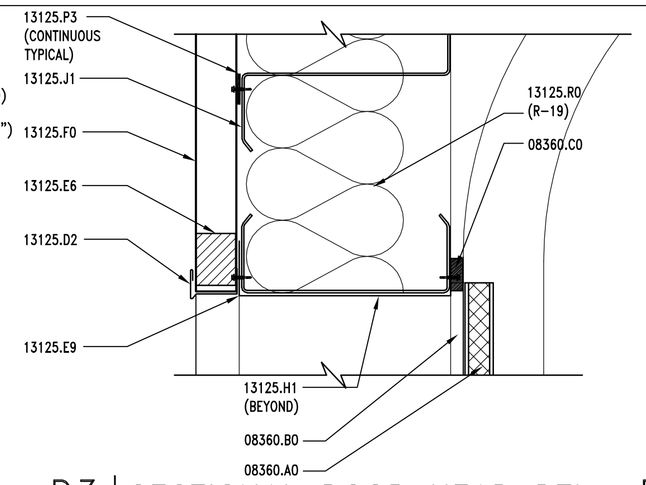

D3 | SECTIONAL DOOR HEAD DTL.

AE601 REF. AE601 SCALE: 3" = 1'-0"

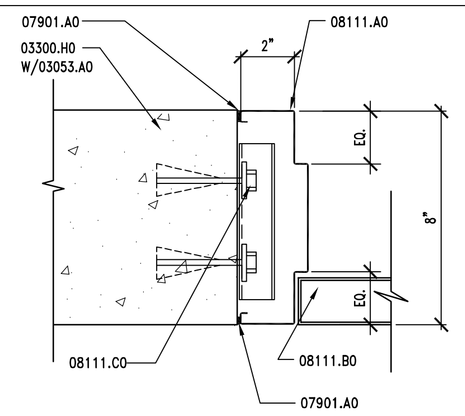

D4 | DOOR JAMB DETAIL

AE601 REF. AE601 SCALE: 3" = 1'-0"

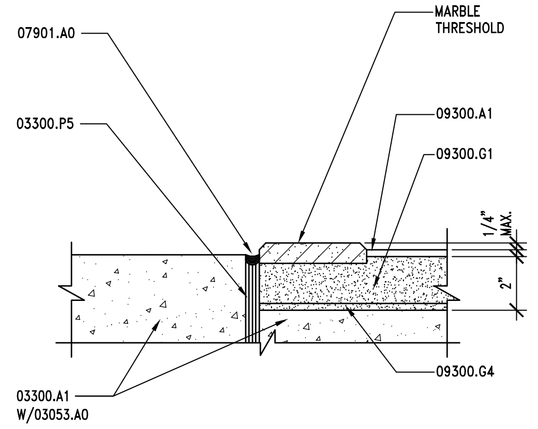

C1 | MARBLE THRESHOLD DETAIL

AE601 REF. AE601 SCALE: 3" = 1'-0"

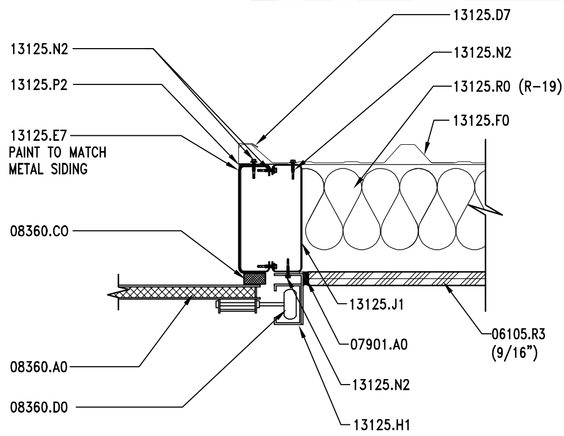

C2 | SECTIONAL DOOR JAMB DTL.

AE601 REF. AE601 SCALE: 1 1/2" = 1'-0"

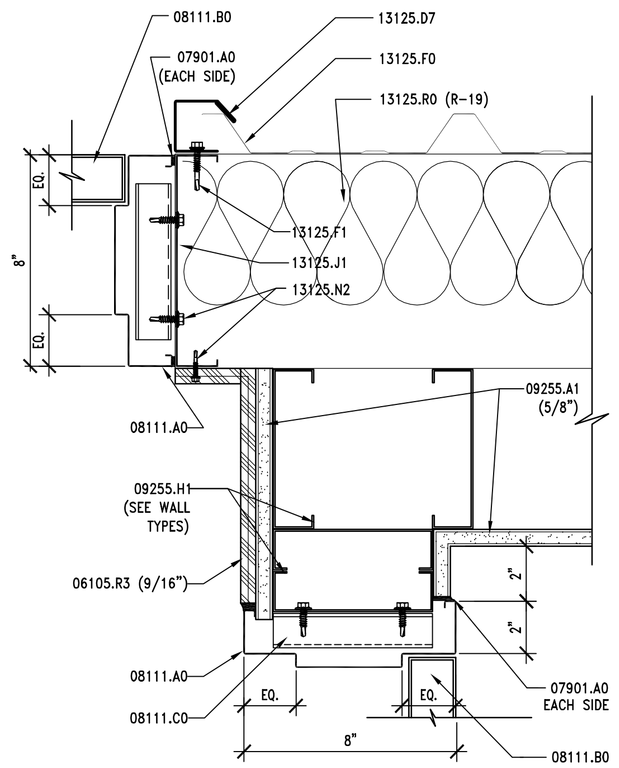

B3 | DOOR JAMB DETAIL

AE601 REF. AE601 SCALE: 3" = 1'-0"

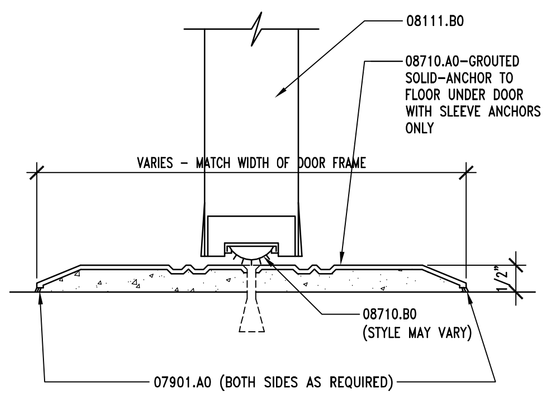

B1 | THRESHOLD DETAIL

AE601 REF. AE601 SCALE: NONE

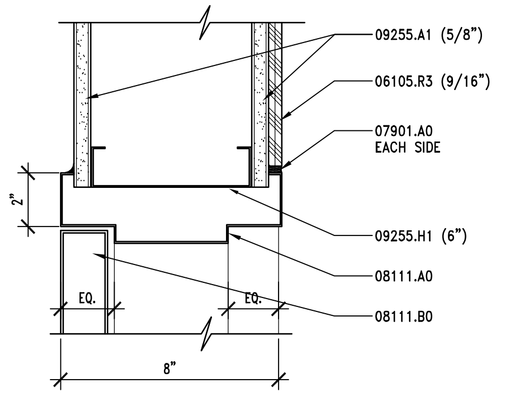

B2 | DOOR HEAD DETAIL

AE601 REF. AE601 SCALE: 3" = 1'-0"

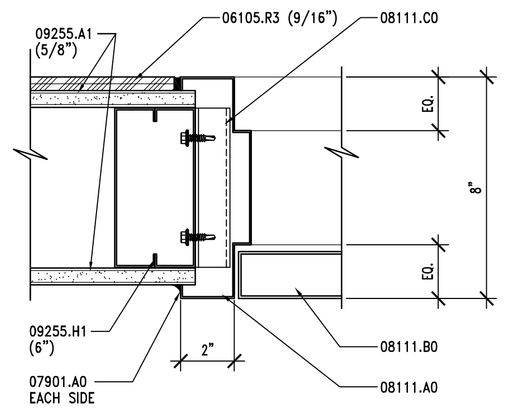

A1 | DOOR JAMB DETAIL

AE601 REF. AE601 SCALE: 3" = 1'-0"

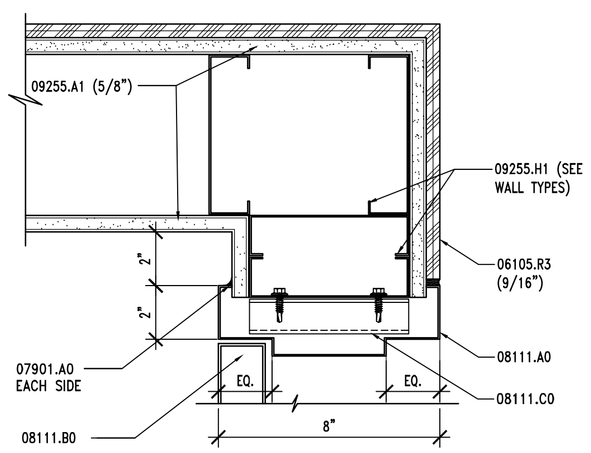

A2 | DOOR JAMB DETAIL

AE601 REF. AE601 SCALE: 3" = 1'-0"

DOOR FRAME TYPES

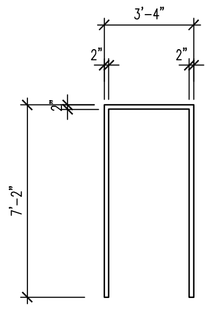

TYPE A

DOOR TYPES

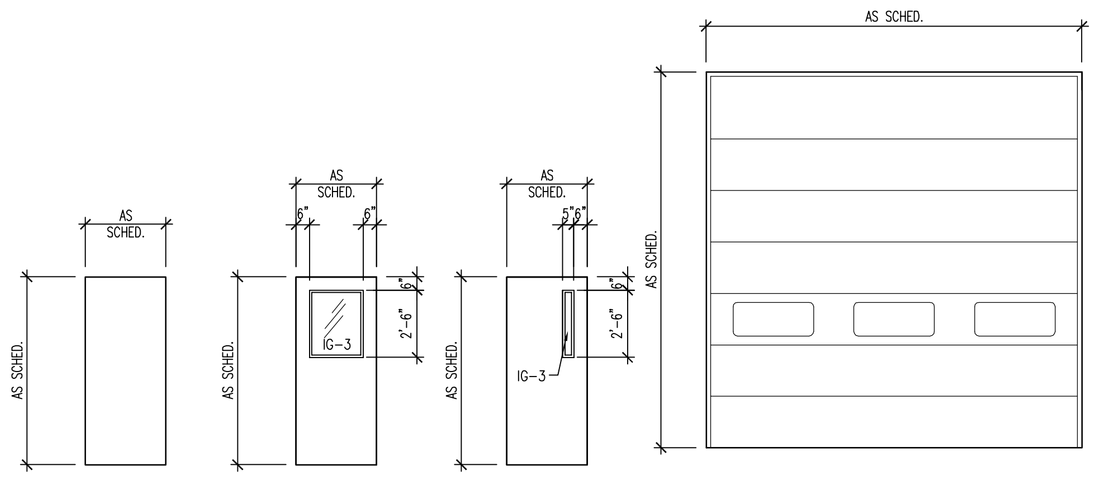

TYPE 1 TYPE 2 TYPE 3 TYPE 4

DOOR SCHEDULE

DOOR NUMBER	ROOM NUMBER	DOORS TYPE	DOORS WIDTH	DOORS HEIGHT	DOORS THICKNESS	DOORS MATERIAL	DOORS FINISH	DOORS GLASS	FRAMES TYPE	FRAMES MATERIAL	FRAMES FINISH	DETAILS HEAD	DETAILS JAMB	DETAILS THRESHOLD	LABEL (MIN.)	REMARKS
D101A	101	3	3'-0"	7'-0"	1 3/4"	HM	PT	T	A	HM	PT	D2/AE601	D1 & D4/AE601	B1/AE601	–	INSULATED
D101B	101	4	14'-0"	14'-0"	–	ST	–	T	–	ST	PT	D3/AE601	C2/AE601	–	–	SECTIONAL INSULATED DOOR
D102A	102	3	3'-0"	7'-0"	1 3/4"	HM	PT	T	A	HM	PT	D2/AE601	B3, D4 & D1/AE601	B1/AE601	–	INSULATED
D102B	102	4	14'-0"	14'-0"	–	ST	–	T	–	ST	PT	D3/AE601	C2/AE601	–	–	SECTIONAL INSULATED DOOR
D102C	102	4	14'-0"	14'-0"	–	ST	–	T	–	ST	PT	D3/AE601	C2/AE601	–	–	SECTIONAL INSULATED DOOR
D102D	102	4	14'-0"	14'-0"	–	ST	–	T	–	ST	PT	D3/AE601	C2/AE601	–	–	SECTIONAL INSULATED DOOR
D102E	102	4	14'-0"	14'-0"	–	ST	–	T	–	ST	PT	D3/AE601	C2/AE601	–	–	SECTIONAL INSULATED DOOR
D102F	102	3	3'-0"	7'-0"	1 3/4"	HM	PT	T	A	HM	PT	D2/AE601	D1 & D4/AE601	B1/AE601	–	INSULATED
D102G	102	4	14'-0"	14'-0"	–	ST	–	T	–	ST	PT	D3/AE601	C2/AE601	–	–	SECTIONAL INSULATED DOOR
D102H	102	4	14'-0"	14'-0"	–	ST	–	T	–	ST	PT	D3/AE601	C2/AE601	–	–	SECTIONAL INSULATED DOOR
D102J	102	4	14'-0"	14'-0"	–	ST	–	T	–	ST	PT	D3/AE601	C2/AE601	–	–	SECTIONAL INSULATED DOOR
D102K	102	4	14'-0"	14'-0"	–	ST	–	T	–	ST	PT	D3/AE601	C2/AE601	–	–	SECTIONAL INSULATED DOOR
D103A	103	1	3'-0"	7'-0"	1 3/4"	HM	PT	–	A	HM	PT	B2/AE601	A2 & A1/AE601	–	20 MIN.	
D104A	104	1	3'-0"	7'-0"	1 3/4"	HM	PT	–	A	HM	PT	B2/AE601	A2 & A1/AE601	C1/AE601	–	
D105A	105	2	3'-0"	7'-0"	1 3/4"	HM	PT	–	A	HM	PT	B2/AE601	A2 & A1/AE601	–	–	
D106A	106	3	3'-0"	7'-0"	1 3/4"	HM	PT	T	A	HM	PT	B2/AE601	A1 & B3/AE601	–	–	

KEYNOTES

03053.A0	CONCRETE WATER PROOFING SYSTEM
03300.A1	CONCRETE SLAB ON GRADE – RE: STRUCTURAL
03300.H0	FOUNDATION WALL, RE: STRUCTURAL
03300.P5	ISOLATION JOINT
06105.R3	G1S A/C PLYWOOD (THICKNESS)
07901.A0	SEALANT
08111.A0	PRESSED METAL FRAME
08111.B0	HOLLOW METAL DOOR
08111.C0	JAMB ANCHOR
08360.A0	OVERHEAD SECTIONAL DOOR
08360.B0	DOOR TRACK
08360.C0	WEATHERSTRIPPING
08360.D0	DOOR GUIDE
08710.A0	THRESHOLD
08710.B0	DOOR SWEEP
09255.A1	GYPSUM BOARD (THICKNESS)
09255.H1	METAL STUDS (SIZE)
09300.A1	UNGLAZED CERAMIC MOSAIC TILE
09300.G1	MORTAR BED
09300.G4	WATERPROOF MEMBRANE
13125.D2	METAL HEAD FLASHING
13125.D6	DOOR HEAD FLASHING
13125.D7	JAMB FLASHING
13125.E6	WALL CLOSURE
13125.E7	METAL OUTSIDE CLOSURE
13125.E9	FRAMED OPENING HEADER
13125.F0	METAL WALL PANEL
13125.F1	METAL WALL FASTENER
13125.H1	METAL ANGLE
13125.J1	STRUCTURAL GIRT
13125.N2	FASTENER (SPACING)
13125.P2	SEALANT
13125.P3	THERMAL BREAK
13125.R0	INSULATION & VAPOR BARRIER (R-VALUE)

GENERAL NOTES

1. SEE SHEET AE602 FOR GLAZING TYPES.
2. SEE SPECIFICATIONS FOR DOOR HARDWARE GROUPS

CLIENT

BRIGHAM CITY
MAINTENANCE FACILITY
STATION #1423
1325 EAST HIGHWAY 90
BRIGHAM CITY, UTAH 84302

DESIGNER

ARCHIPLEX GROUP
architecture · planning · design services
1135 South West Temple, Ste. A
Salt Lake City, UT 84101
P:(801) 961-7070
F:(801) 961-7373

CONSULTANTS

PROFESSIONAL SEAL

STATE OF UTAH
RALPH M. STANISLAW
95-310818-0301
LICENSED ARCHITECT

ISSUE

MARK	DATE	DESCRIPTION
	2/15/06	CONSTRUCTION DOCUMENTS
	1/18/06	FINAL REVIEW SET
	12/21/05	DD REVIEW SET
	9/16/05	PRELIMINARY REVIEW SET

DFCM PROJECT NO:	05059900
ARCHIPLEX PROJECT NO:	050013.01
DRAWN BY:	K. PHILLIPS
CHECKED BY:	R. STANISLAW
SCALE:	AS SHOWN
DATE:	FEBRUARY 15, 2006

KEY PLAN

SHEET TITLE

DOOR SCHEDULE
AND DETAILS

AE601

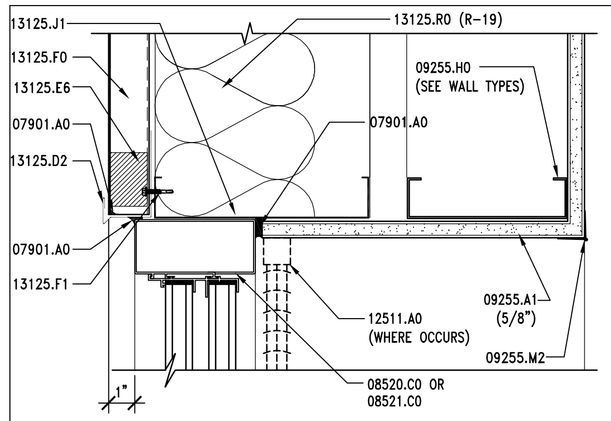

D1 | WINDOW HEAD DETAIL

AE602 | REF. AE602 | SCALE: 3" = 1'-0"

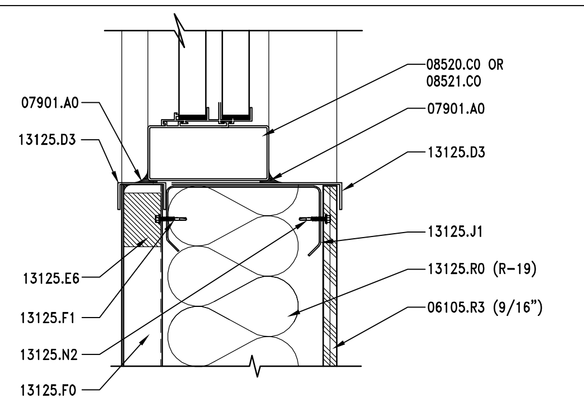

D2 | WINDOW SILL DETAIL

AE602 | REF. AE602 | SCALE: 3" = 1'-0"

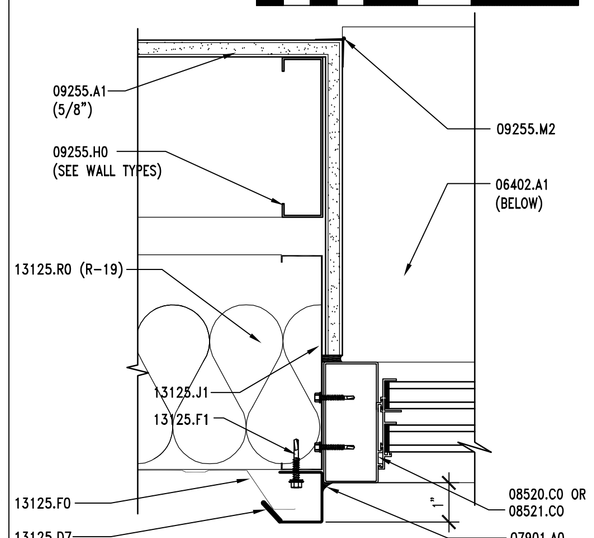

C1 | WINDOW JAMB DETAIL

AE602 | REF. AE602 | SCALE: 3" = 1'-0"

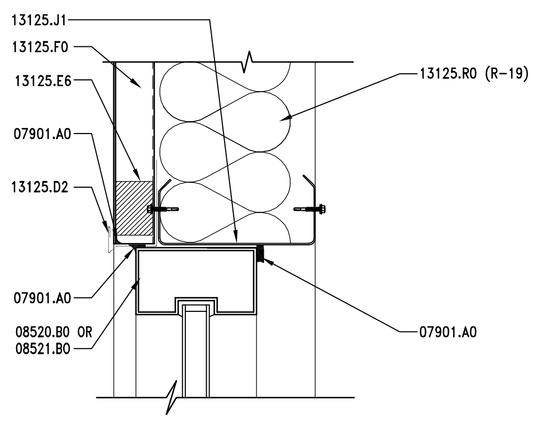

C2 | WINDOW HEAD DETAIL

AE602 | REF. AE602 | SCALE: 3" = 1'-0"

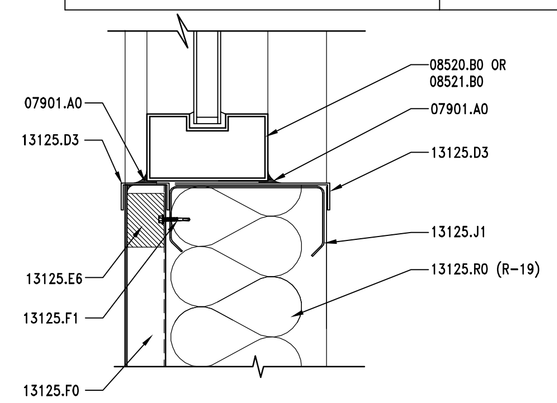

C3 | WINDOW SILL DETAIL

AE602 | REF. AE602 | SCALE: 3" = 1'-0"

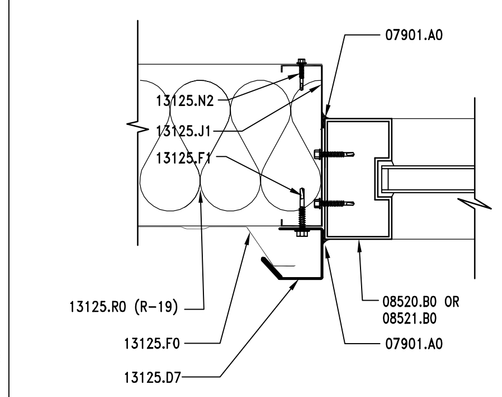

B1 | WINDOW JAMB DETAIL

AE602 | REF. AE602 | SCALE: 3" = 1'-0"

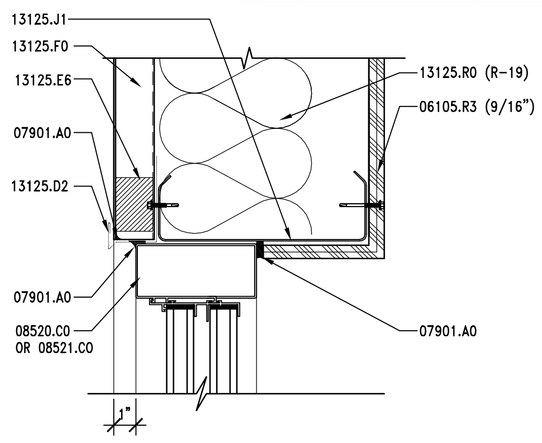

B2 | WINDOW HEAD DETAIL

AE602 | REF. AE602 | SCALE: 3" = 1'-0"

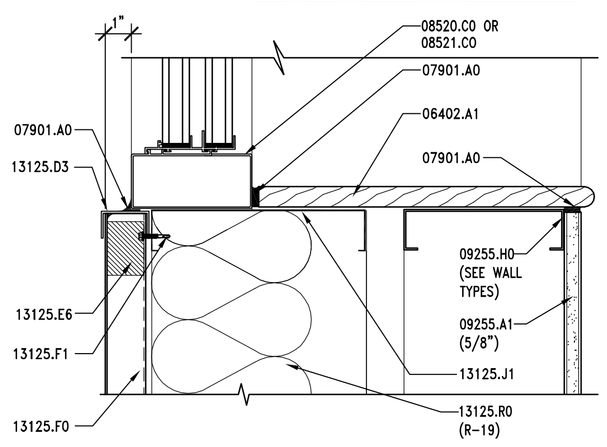

B3 | WINDOW SILL DETAIL

AE602 | REF. AE602 | SCALE: 3" = 1'-0"

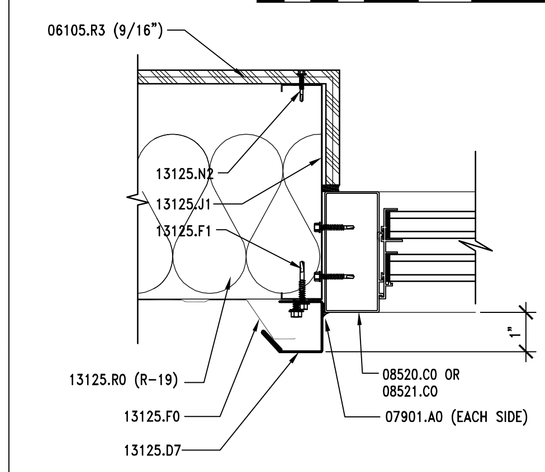

A1 | WINDOW JAMB DETAIL

AE602 | REF. AE602 | SCALE: 3" = 1'-0"

ROOM FINISH SCHEDULE

ROOM NAME & NUMBER		FLOOR	BASE	WALLS				DOOR/FRAMES	P. LAM.	REMARKS
				WEST	EAST	NORTH	SOUTH			
101	MAINTENANCE BAY	1	–	–	1	1	1	1	–	–
102	VEHICLE STORAGE BAYS	1	–	1	1 & 3	1	1 & 3	1	–	SHIPS LADDER – MATCH DOOR FRAME COLOR #1
103	STORAGE	1	2	3	3	3	3	1	3	–
104	RESTROOM	3	3	2 & 4	2 & 4	2 & 4	2 & 4	2	–	USE BULLNOSE AT TOP OF WAINSCOT
105	TRAINING ROOM	2	1	2	2	2	2	2	1 & 2	PAINT WINDOW SILL TO MATCH DOOR COLOR #2
106	OFFICE	2	1	2	2	2	2	2	–	PAINT WINDOW SILL TO MATCH DOOR COLOR #2
201	MEZZANINE	1	–	–	1	–	1	–	–	PAINT GUARDRAIL & DECK ANGLE TO MATCH DOOR COLOR #1

ROOM FINISH LEGEND

FLOOR	WALL	BASE	DOOR & FRAMES	PLASTIC LAMINATE
1. BASE BID: LIQUID PENETRATING CONCRETE HARDENER DENSIFIER-SEALER. ALT. #1: LIQUID PENETRATING SILANE AND OLIPHOBIC CONCRETE SEALER. ALT. #2 INTEGRAL XYPEX ADMIX IN CONJUNCTION W/ALT. #1 2. 12" x 12" VINYL COMPOSITION TILE – ARMSTRONG STANDARD EXCELON IMPERIAL TEXTURE #51858-SANDRIFT WHITE OR EQUAL 3. 2" x 2" CERAMIC TILE – DALTILE, KEYSTONES, MEXICAN SAND SPECKLE W/MAPEI GROUT #05 – CHAMOIS OR EQUAL	1. G1S A/C PLYWOOD – PAINTED BENJAMIN MOORE #2127-60 – FEATHER GRAY OR EQUAL 2. GYPSUM BOARD – PAINTED BENJAMIN MOORE – NAVAJO WHITE OR EQUAL 3. GYPSUM BOARD – PAINTED BENJAMIN MOORE #2127-60 – FEATHER GRAY OR EQUAL 4. 4" x 4" CERAMIC WALL TILE – DALTILE #6520 – MATTE FAWN W/MAPEI GROUT #05 – CHAMOIS OR EQUAL	1. 4" RUBBER BASE – JOHNSONITE #49 – BEIGE OR EQUAL 2. 4" RUBBER BASE – JOHNSONITE #38 – PEWTER OR EQUAL 3. 2" x 2" COVED TILE BASE – DALTILE, KEYSTONES, MEXICAN SAND SPECKLE OR EQUAL	1. PAINTED – BENJAMIN MOORE #2124-30 DEEP SILVER OR EQUAL 2. PAINTED – ICI #427 – DEERFIELD OR EQUAL	1. COUNTER TOP/CABINET FACE – WILSONART #4781-60 SUNSTONE OR EQUAL 2. CABINET FACE – WILSONART #4794-60 WINDSWEPT BRONZE OR EQUAL 3. SHELVING – WILSONART #D73-60 PEWTER OR EQUAL

KEYNOTES

06105.R3	G1S A/C PLYWOOD (THICKNESS)
06402.A1	3/4" PAINTED WOOD SILL
07901.A0	SEALANT
08520.B0	FIXED WINDOW
08520.C0	ALUM. WINDOW W/SLIDING GLASS PANEL
08521.B0	FIXED VINYL WINDOW
08521.C0	VINYL WINDOW W/SLIDING GLASS PANEL
09255.A1	GYPSUM BOARD (THICKNESS)
09255.H0	METAL STUD
09255.M2	METAL CORNER BEAD (TYP)
12511.A0	HORIZONTAL LOUVER BLINDS
13125.D2	METAL HEAD FLASHING
13125.D3	METAL SILL FLASHING
13125.D7	JAMB FLASHING
13125.E6	WALL CLOSURE
13125.F0	METAL WALL PANEL
13125.F1	METAL WALL FASTENER
13125.J1	STRUCTURAL GIRT
13125.N2	FASTENER (SPACING)
13125.R0	INSULATION & VAPOR BARRIER (R-VALUE)

GENERAL NOTES

1. ALL FLASHING TO BE PAINTED TO MATCH WINDOW FRAMES
2. SEE SPECIFICATIONS FOR ALL GLAZING TYPES.

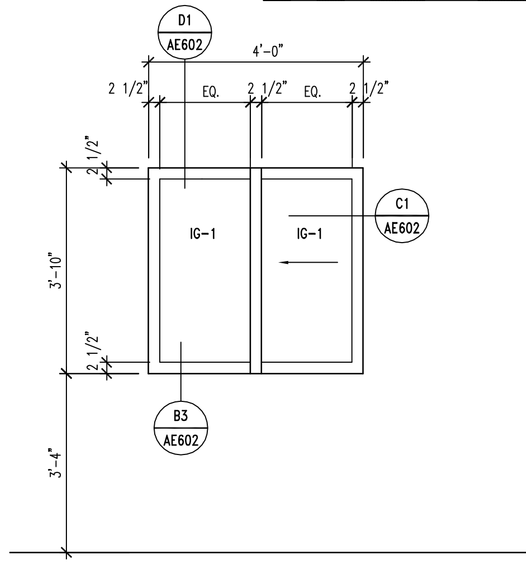

TYPE A

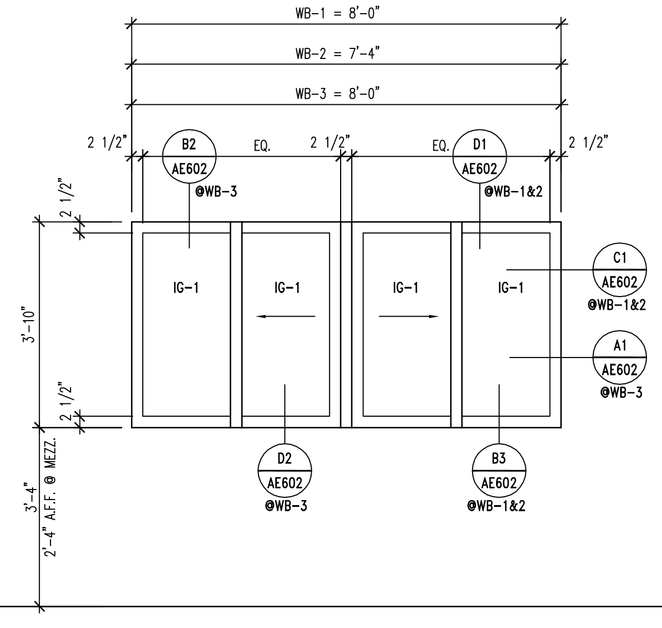

TYPE B

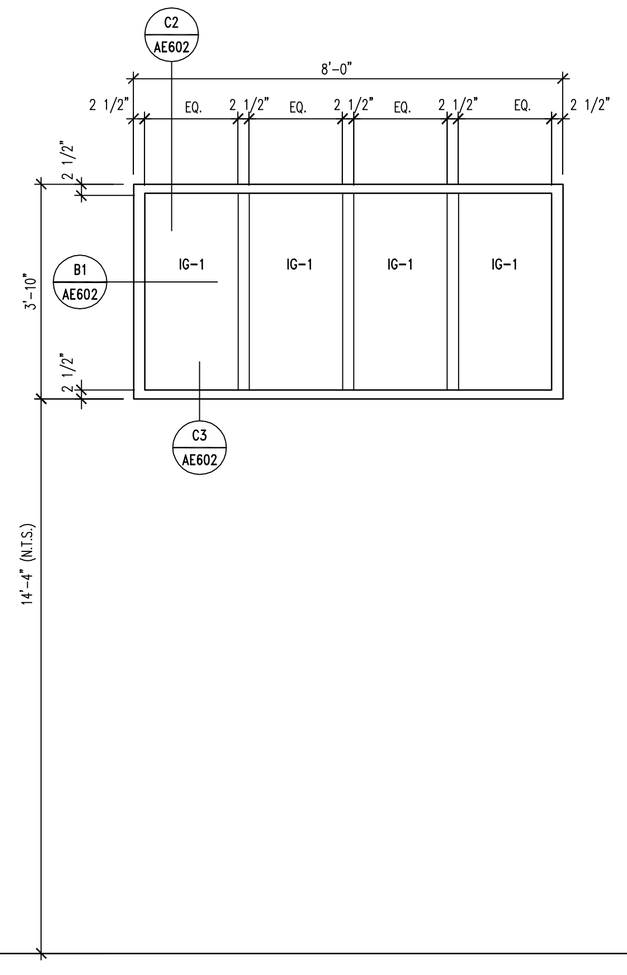

TYPE C

CLIENT

BRIGHAM CITY
MAINTENANCE FACILITY
STATION #1423
1325 EAST HIGHWAY 90
BRIGHAM CITY, UTAH 84302

DESIGNER

ARCHIPLEX GROUP
architecture · planning · design services
1135 South West Temple, Ste. A
Salt Lake City, UT 84101
P:(801) 961-7070
F:(801) 961-7373

CONSULTANTS

PROFESSIONAL SEAL

STATE OF UTAH
RALPH M. STANISLAW
95-310818-0301
LICENSED ARCHITECT

ISSUE

MARK	DATE	DESCRIPTION
	2/15/06	CONSTRUCTION DOCUMENTS
	1/18/06	FINAL REVIEW SET
	12/21/05	DD REVIEW SET
	9/16/05	PRELIMINARY REVIEW SET

DFCM PROJECT NO:	05059900
ARCHIPLEX PROJECT NO:	050013.01
DRAWN BY:	K. PHILLIPS
CHECKED BY:	R. STANISLAW
SCALE:	AS SHOWN
DATE:	FEBRUARY 15, 2006

KEY PLAN

SHEET TITLE

WINDOW FRAME TYPES, GLAZING & FINISH SCHEDULES AND DETAILS

AE602

GENERAL STRUCTURAL NOTES

GENERAL

1. The structural notes are intended to complement the project specifications. Specific notes and details in the drawings shall govern over the structural notes and typical details.
2. Typical details and sections shall apply where specific details are not shown.
3. The contractor shall verify all site conditions and dimensions. If actual conditions differ from those shown in the contract drawings, the contractor shall immediately notify the architect/engineer before proceeding with the fabrication or construction of any effected elements.
4. Omissions or conflicts between the contract drawings and/or specifications shall be brought to the attention of the architect/engineer before proceeding with any work involved. In case of conflict, follow the most stringent requirement as directed by the architect/engineer at no additional cost to the owner.
5. The contractor shall submit a written request to the architect/engineer before proceeding with any changes, substitutions or modifications. Any work done by the contractor before receiving written approval will be at the contractor's risk.
6. The contractor shall coordinate with all trades any items that are to be integrated into the structural system such as openings, penetrations, mechanical and electrical equipment, etc. Sizes and locations of mechanical and other equipment that differs from those shown on the contract drawings shall be reported to the architect/engineer.
7. The contractor shall provide adequate shoring and bracing as required for his method of erection. Shoring and bracing shall remain in place until final connections for the permanent members are completed. The building shall not be considered stable until all connections are completed. Walls shall not be considered self-supporting and shall be braced until the floor/roof system is completed.
8. Site observations by BHB Consulting Engineers, P.C.'s field representative shall not be construed as approval of construction procedures nor special inspection.
9. Detailing and shop drawing production for structural elements will require information (including dimensions) contained in the architectural, structural and/or other consultants' drawings. The structural drawings shall be used in conjunction with the architectural and other consultant's drawings. Some dimensions and elements such as elevations, depressions, slopes, mechanical housekeeping pads, etc. are not shown in the structural drawings. All dimensions shown on structural drawings shall be verified by contractor with architectural, mechanical and electrical drawings.
10. Review of shop drawing submittals by BHB Consulting Engineers, P.C. is for general compliance only and is not intended for approval. The shop drawing review shall not relieve the contractor from the responsibility of completing the project according to the contract documents.
11. Shop drawings made from reproductions of the contract drawings will be rejected unless the contractor signs a release agreement prior to the shop drawings being reviewed.
12. Only an authorized representative of BHB Consulting Engineers, P.C. may make changes to these contract drawings. BHB Consulting Engineers, P.C. shall not be held responsible or liable for any claims arising directly or indirectly from changes made without written authorization by an authorized representative of BHB Consulting Engineers, P.C.

BASIS OF DESIGN

1. Governing Building Code — International Building Code 2003
2. Mezzanine Floor Loads
   a. Dead — 54 psf
   b. Live — 125 psf
3. Seismic Loads
   a. Short Period Mapped Spectral Acceleration — $S_S = 1.47$
   b. Soil Site Class — D
   c. Short Period Site Coefficient — $F_a = 1.0$
   d. 5% Damped Design Spectral Response Acceleration — $S_{DS} = 2/3 * F_a * S_S$
   e. Seismic Importance Factor — $I_e = 1.00$
   f. Response Modification Coefficient — R = 4.0
   g. Seismic Response Coefficient — $C_s = S_{DS} * I_e / R$
   h. W — Dead Loads of Structure
   i. Building Seismic Design Category — D
   j. System Overstrength Factor — 3.0
   k. Deflection Amplification Factor — 3.0
   l. Base Shear — $V = C_S * W = 0.245$ W (Strength Design)
4. Wind Loads
   a. Wind Velocity (3 Second Gust) — 90 mph
   b. Exposure Type — C
   c. Wind Importance Factor — 1.00

FOUNDATION

1. Soils Investigation Report: Earthtec Testing and Engineering, P.C. dated October 27, 2005.
2. Soil bearing pressure: 2500 psf - Assumed by owner.
3. Frost Protection: 30 inches minimum.
4. Clear excavations of debris and loose soil prior to placing footings. All footings shall bear on undisturbed natural sub-grade or engineered compacted fill as noted in the soils report.

EARTHWORK

1. Consult the project specifications and soils report for further earthwork requirements.

CONCRETE

1. Materials, unless noted otherwise:
   a. Normal weight aggregates — ASTM C 33
   b. Reinforcing Steel — ASTM 615 Grade 60 (Fy = 60 ksi); Use Grade 40 (Fy = 40 ksi) for field bent dowels with spacings indicated reduced by 1/3.
   c. Deformed Bar Anchors (DBA) — ASTM A496
   d. Admixtures:
      i. Air-entraining admixtures comply with ASTM C 260 (when used).
      ii. Calcium chloride shall not be added to the concrete mix.
   e. Type I cement complying with ASTM C-150 shall be used for all concrete.
   f. The water/cement ratios shall meet the requirements of ACI 318.
   g. Provide air entraining as recommended by ACI 318.
   h. No aluminum conduit or product containing aluminum or any other material injurious to concrete shall be embedded in concrete.
2. Compressive strengths of concrete at 28 days shall be as follows:
   a. Footings ..... 3,000 psi
   b. Interior Slabs on Grade ..... 4,000 psi
   c. Walls ..... 3,000 psi
   d. Normal Weight concrete over Steel Deck ..... 3,500 psi
   e. All Site Concrete ..... 4,000 psi
3. 5 1/2" thick (total thickness) normal weight concrete slab shall be poured over the steel deck. Reinforce slab with 6" x 6" - W2.1/W2.1 welded wire fabric minimum, unless noted otherwise. Welded Wire Fabric shall be placed 1" to 1-1/2" below the top of the slab.
   a. At contractor's option, the welded wire fabric may be substituted with 100% virgin polypropylene synthetic fiber containing no reprocessed olefin materials and specifically manufactured to an optimum gradation for use as concrete secondary reinforcement. Application shall be 1.5 lbs minimum per cubic yard.
4. Only one grade or type of concrete shall be poured on the site at any given time.
5. The contractor shall be responsible for the design, detailing, care, placement and removal of all formwork and shores.
   a. Supporting forms and shoring shall not be removed until structural members have acquired sufficient strength to safely support their own weight and any construction load to which they may be subjected. In no case, however, shall forms and shoring be removed in less than 24 hours after concrete placement.
   b. Suspended slabs shall be re-supported after form removal until concrete reaches its 28-day specified compressive strength.
6. Reinforcement shall have the following concrete cover:
   Cast-in-place Concrete: ..... Clear Cover
   a. Cast against and permanently exposed to earth ..... 3"
   b. Formed concrete exposed to earth or weather:
      #6 thru #18 bars ..... 2"
      #5 and smaller bars ..... 1-1/2"
   c. Concrete not exposed to weather or in contact with ground:
      Slabs, Walls, Joists; #11 bars and smaller ..... 3/4"
      Beams, Columns: Primary Reinf., Ties, Stirrups, Spirals ..... 1-1/2"
7. Construction Joints and Control Joints:
   a. Provide a formed and beveled 2 x 4 x continuous keyway in all horizontal and vertical construction joints including between top of footing and foundation walls, unless noted otherwise. In addition, all joints shall be intentionally roughened to a full amplitude of approximately 1/4 inch.
   b. Control joints shall be installed in slabs on grade so the length to width ratio of the slab is no more than 1.25:1. Control joints shall be completed within 12 hours of concrete placement. Control joints may be installed by:
      i. Saw cut a depth of 1/4 the thickness of the slab
      ii. Tooled joints a depth of 1/4 the thickness of the slab
   c. Install construction or control joints in slabs on grade at a spacing not to exceed 75 times the slab thickness in any direction for reinforced slabs, unless noted otherwise. Construction joints shall not exceed a distance of 125'-0" o.c. in any direction.
   d. In exposed areas, install construction or control joints in concrete over metal deck at a spacing not to exceed 10 feet o/c. Coordinate location with architectural drawings.
8. Construction
   a. Use chairs or other support devices recommended by the CRSI to support and tie reinforcement bars and WWF prior to placing concrete. WWF shall be continuously supported at 36" o.c. maximum. Reinforcing steel for slabs on grade shall be adequately supported on precast concrete units. Lifting the reinforcing off the grade during placement of concrete is not permitted.
   b. Concrete to be mechanically consolidated during placement per ACI standards.
   c. Contractor shall coordinate placement of all openings, curbs, dowels, sleeves, conduits, bolts, inserts and other embedded items prior to concrete placement.
   d. All embeds and dowels shall be securely tied to formwork or to adjacent reinforcing prior to the placement of concrete.
   e. No pipes, ducts, sleeves, etc shall be placed in structural concrete unless specifically detailed or approved by the structural engineer. Penetrations through walls when approved shall be built into the wall prior to concrete placement. Penetrations will not be allowed in footings or grade beams unless detailed. Piping shall be routed around these elements and footings stepped to avoid piping.
   f. Reinforcing Bars shall not be welded. Do not substitute reinforcing bars for DBAs or HSAs.
9. Detailing:
   a. Lap splice lengths shall be detailed to comply with the "Reinforcing Bar Lap Splice Schedule" on sheet S501. Splices may be made with mechanical splices capable of 125% tension capacity of the bar being spliced. Mechanical splices shall be the positive connecting type coupler and shall meet all Uniform Building Code requirements. Use "Cadweld", "Lenton" Standard Couplers, "Bar-Lock" or equal with internal protector. If mechanical splices are used, splices or couplers on adjacent bars shall be staggered a minimum of 24" apart along the longitudinal axis of the reinforcing bars.
   b. At joints provide reinforcing dowels to match the member reinforcing, unless noted otherwise.
   c. At all discontinuous control or construction slab on grade joints, provide 2 - #4 x 48 inches.
   d. Provide corner bars at intersecting wall corners using the same bar size and spacing as the horizontal wall reinforcing.
   e. All vertical reinforcing shall be doweled to footings, or to the structure below with the same size and spacing as the vertical reinforcing for the element above. Dowels extending into footings shall terminate with a 90 degree standard hook and shall extend to within 4" of the bottom of the footing. Footing dowels (#8 bars and smaller) with hooks need not extend more than 20" into footings.
   f. Horizontal wall reinforcing shall terminate at ends of walls and openings into the far end of the jamb column with a 90-degree standard hook plus a 6 bar diameter extension. Horizontal wall reinforcing shall be continuous through construction and control joints.
   g. See detail B2/S501 for reinforcing around miscellaneous openings (8" to 36" wide). For openings wider than 36", contact the engineer. All recesses that interrupt reinforcing shall be reinforced the same as an opening.

EPOXY

1. Epoxy shall be "HIT HY 150 MAX" or "HIT RE 500 " by Hilti Corporation, "Anchor-It" by Adhesive Technology Corporation, "Epcon Injection System" by Ramset/Redhead, "Power-Fast" by Rawl, or approved equal.
2. All drilled holes shall be 1/8 inch larger than the bar or anchor bolt being installed.
3. After drilling the proper size hole, clean the walls and bottom of the hole of all dust and debris using a nylon brush in conjunction with oil free compressed air. The hole shall be free of dust, debris and standing water.
4. Follow all manufacturer's recommendations for epoxy installation.

STRUCTURAL STEEL

1. Material:
   a. Other shapes & Plates — ASTM A36
   b. Deformed Bar Anchors (DBA) — ASTM A496
   c. Bolted Connections: — ASTM A325
2. Fabrication and construction shall comply with the latest edition of the following Codes and Standards:
   a. American Institute of Steel Construction (AISC), "Specification for the Design, Fabrication and Erection of Structural Steel for Buildings," with "Commentary".
   b. AISC "Code of Standard Practice" excluding the following: Section 3.4, Section 4.4, Section 4.4.1,
   c. AISC "Specification for Structural Joints Using ASTM A325 or A490 Bolts"
   d. American Welding Society (AWS), Structural Welding Code (specific items do not apply when they conflict with the AISC requirements).
   e. AISC "Seismic Provision for Structural Steel Buildings"
3. Welding
   a. All welding and cutting shall be performed by AWS certified welders.
   b. Use E-70 XX or as noted otherwise.
   c. All intersecting steel shapes which are not bolted shall be connected by a fillet weld all around, unless noted otherwise. Where fillet weld sizes are not shown they shall be 1/16" less than the thinnest of the connected parts for thicknesses 1/4" and larger. Fillet welds on plates less than 1/4" shall be of the same size as the thinnest of the connected part.
   d. Reinforcing Bars: Do not weld rebar. Do not substitute reinforcing bars for deformed bar anchors (DBAs), machine bolts, or headed stud anchors(HSAs).
   e. Do not weld anchor bolts, including "tack" welds.
   f. Headed Stud Anchors (HSAs) welding and deformed bar anchor welding shall conform to the manufacturer's specifications.
4. Bolted Connections:
   a. Use ASTM A325N bolts for steel to steel connections, as noted herein or as noted on the drawings. A325N bolts shall be used in connections for simple span framing and beam (or girder) to bearing plate connections. Tighten bolts to a snug tight condition.
   b. Use hardened washers beneath the turned element of all bolts or nuts. Use hardened beveled washers, to compensate for the lack of parallelism, where the outer face of the bolted parts has a slope greater than one in twenty with respect to the plane normal to the bolt axis. At oversized holes hardened washers or plates shall conform with ASTM F-436 and shall completely cover the slot after installation.
   c. Where a steel to steel beam connection is not shown, provide a standard AISC framed connection for one half the total uniform load capacity of the beam for the span and steel specified.
   d. Bolts, nuts and washers shall not be reused.

METAL DECKING

1. Steel deck shall comply with the latest requirements of the Steel Deck Institute.
2. All deck shall be 3-span continuous minimum. In areas where 3-span conditions are not possible, the contractor shall provide heavier gauge deck as required to provide the equivalent loading of the deck under a three span condition.
3. All deck supporting members shall be dry before welding.
4. Crimp seams before button punching or welding interlocking seams.
5. Where deck is to receive sprayed-on fire proofing, painted deck shall be coated with special paint that will allow the sprayed-on fire proofing to adhere to the painted deck.

Steel Floor Deck

a. Steel floor deck shall be 2" deep X 20 gauge minimum galvanized Non-Composite Formlock deck with interlocking side seams and #10 screws at 8" o.c. with the following properties:

	20 Gauge
Minimum S (in^3/ft) =	0.361
Minimum I (in^4/ft) =	0.423

b. Steel deck with 5 1/2" thick (overall thickness) normal weight concrete slab shall have a minimum diaphragm shear capacity of 450 lbs/ft. for a 1 deck span.
c. Deck Attachment:
   i. Frame Fastening: #12 STS @ 35/5 Pattern.
   ii Stitch Fastening: (1) # 10 STS per plan.
d. Attach interlocking seams with 3/16" Ø button punch at 18" o.c., with 1 1/2" top seam weld at 36" o.c. or with Verco PunchLok System at 36" o.c. or with ASC DeltaGrip Sytsem at 36"o/c Closer spacings may be used to develop minimum shear requirements.
e. Provide a 2-inch minimum bearing at supports.

COLD-FORMED STEEL

1. All cold-formed steel shall meet the requirements of "Specifications for the Design of Cold-Formed Steel Structural Members" by American Iron and Steel Institute (AISI).
2. Light Gauge Steel Framing:
   a. Galvanized steel must meet the minimum requirements of ASTM A446 Grade D (Fy = 50 ksi) for 12, 14 and 16-gauge and ASTM A446 Grade A (Fy = 33 ksi) for 18-gauge and lighter. Galvanized coatings must meet the ASTM A525 specification.
   b. Follow all manufacturers' recommendations for the use of these products.
   c. Unless noted otherwise, all welded connections shall be done according to AWS standards.
   d. All interior non-bearing steel-stud walls that extend above the ceiling but do not attach to the structure above shall be brace with diagonal metal-stud braces (45 degrees). The kl/r ratio of the brace shall not exceed 200 and shall not be spaced further apart than 10'-0" o/c. Connect diagonal braces to the top of the steel stud walls and to the top flange of the steel beams with two #10 tek screws minimum. Where a concrete deck occurs above, use two powder-driven fasteners per diagonal brace. Other approved methods may be used.
3. Prefabricated Systems: Submit complete shop drawings and calculations of all elements for review. Shop Drawings shall bear the stamp of a Professional Engineer registered in the State of Utah.

PREFABRICATED METAL BUILDING

1. The design, fabrication and erection of all prefabricated elements and associated hardware shall comply with the latest requirements of the IBC, AISC, SDI and AISI.
2. Prior to fabrication and installation of anchor bolts, the metal building supplier shall submit complete shop drawings and calculations including reactions bearing the stamp of a Registered Design Professional licensed in the State of Utah. Complete calculations shall be submitted with the shop drawings.
3. Do not modify any structural element of the prefabricated metal building without the written consent and direction from the manufacturer. Send copies of the consent and modifications to the Architect and Engineer.
4. The design of the premanufactured structural roof system including the steel deck, joists, girders, columns, and the lateral force resisting system (including rigid frames) is the responsibility of the premanufactured metal building supplier. Refer to the prefabricated structural roof system supplier's drawings and calculations for the exact gravity roof load values and for the design of the roof and lateral systems.

SPECIAL INSPECTION AND QUALITY ASSURANCE

Special inspection and quality assurance, as required by section 1704 of the IBC, shall be provided by an independent agency employed by the owner unless waived by the building official. The contractor shall coordinate and cooperate with the required inspections. All testing and inspection reports shall be sent to the engineer for review. Items requiring special inspection and quality assurance are:

1. Concrete placement (IBC Section 1704.4)
   a. Continuous special inspection shall be provided
   b. See specifications for concrete testing requirements.
   c. Cylinders, slump and air-entrainment shall be done for every 50 cubic yards or each day's production if less than 50 cubic yards
2. Bolts installed in concrete (IBC Section 1704.4)
   a. All bolts shall be inspected prior to and during concrete placement.
3. Concrete reinforcing steel placement (IBC Section 1704.4)
   a. Reinforcing shall be inspected prior to concrete placement.
4. Structural welding, including steel deck (IBC 1704.3)
   a. Periodic special inspection of metal floor and roof decks
   b. Periodic special inspection of single pass fillet welds less than or equal to 5/16"
   c. Continuous special inspection of single pass fillet welds greater than 5/16" and multi-pass fillet welds.
   d. Continuous special inspection of complete and partial penetration welds.
5. High Strength bolted connections (IBC Section 1704.3.3)
   a. Periodic special inspection of bearing type connections.
   b. Continuous special inspection of slip critical connections. Special inspector shall be present to observe the pre-installation testing and calibration procedures.
6. Epoxy Anchors (IBC Section 1704.13)
   a. Special inspection shall verify all drilled holes' size and depth prior to installation of epoxy and anchor rod.

DEFERRED SUBMITTALS

For the purpose of this section, deferred submittals are defined as per section 106.3.4.2 of the IBC. Submittal documents for deferred submittal items shall be submitted to the engineer/architect for their review for general conformance with the design of the building. Deferred structural submittals for this project are:

1. Prefabricated Metal Building

LEGEND OF MARKS AND ABREVIATIONS

AB	ANCHOR BOLT(S)	JST	JOIST
ABV	ABOVE		
ALT	ALTERNATE	k	KIP(S) = 1000 POUNDS
APPROX	APPROXIMATE	KLF	KIPS PER LINEAL FOOT
ARCH	ARCHITECT(URAL)	KSF	KIPS PER SQUARE FOOT
BLDG	BUILDING	LBS	POUNDS
BLW	BELOW	LF	LINEAL FOOT
BM	BEAM	LLH	LONG LEG HORIZONTAL
BOT	BOTTOM	LLV	LONG LEG VERTICAL
BRG	BEARING	LSV	LONG SIDE VERTICAL
BTWN	BETWEEN		
		MAX	MAXIMUM
CC.	CENTER-TO CENTER	MECH	MECHANICAL
C.J.	CONST/CONTROL JOINT	MFR	MANUFACTURER
COL	COLUMN	MIN	MINIMUM
CONC	CONCRETE	MISC	MISCELLANEOUS
CONST	CONSTRUCTION		
CTR	CENTER	NIC	NOT IN CONTRACT
CW-x	CONCRETE WALL	NTS	NOT TO SCALE
DBA	DEFORMED BAR ANCHOR	O.C.	ON CENTER
DBE	DECK BEARING ELEVATION	O.F.	OUTSIDE FACE
DBL	DOUBLE	OPNG	OPENING
DET	DETAIL	OPP	OPPOSITE
DIA	DIAMETER		
DIM	DIMENSION	PCF	POUNDS PER CUBIC FOOT
DN	DOWN	PL	PLATE
DWG	DRAWING	PLF	POUNDS PER LINEAL FOOT
DWL	DOWEL	PSF	POUNDS PER SQUARE FOOT
		PSI	POUNDS PER SQUARE INCH
EA	EACH	PT	POINT
E.F.	EACH FACE		
ELEC	ELECTRICAL	REINF	REINFORCING
ELEV	ELEVATION	REQD	REQUIRED
EQUIP	EQUIPMENT		
EQ	EQUAL		
E.W.	EACH WAY	SHT	SHEET
EXST	EXISTING	SI	SPECIAL INSPECTION
EXP	EXPANSION	SIM	SIMILAR
EXT	EXTERIOR	SOG	SLAB-ON-GRADE
		SQ	SQUARE
FC-x	CONTINUOUS FOOTING MARK	STAG	STAGGERED
F.D.	FLOOR DRAIN	STD	STANDARD
FDN	FOUNDATION	STL	STEEL
F.F.	FINISHED FLOOR	STR	STRUCTURAL
FS-x	SQUARE FOOTING MARK	STS	SELF TAPPING SCREWS
FT	FOOT		
FTG	FOOTING	T&B	TOP AND BOTTOM
FTS-x	THICKEN SLAB MARK	TEMP	TEMPERATURE
		THDS	THREADS
GA	GAUGE	T.O.	TOP OF
GALV	GALVANIZED	TOC	TOP OF CONCRETE
GSN	GENERAL STRUCTURAL NOTES	TOD	TOP OF DECK
		TOF	TOP OF FOOTING
HORIZ	HORIZONTAL	TOW	TOP OF WALL
HT	HEIGHT	TYP	TYPICAL
ICBO	INTERNATIONAL CONFERENCE OF BUILDING OFFICIALS	UNO	UNLESS NOTED OTHERWISE
IBC	INTERNATIONAL BUILDING CODE		
I.F.	INSIDE FACE	VERT	VERTICAL
IN.	INCH		
INT	INTERIOR	W/	WITH
		WWF	WELDED WIRE FABRIC
JT	JOINT	WWM	WELDED WIRE MESH

CLIENT

BRIGHAM CITY
MAINTENANCE FACILITY
STATION #1423
1325 EAST HIGHWAY 90
BRIGHAM CITY, UTAH 84302

DESIGNER

ARCHIPLEX GROUP
architecture · planning · design services
1135 South West Temple, Ste. A
Salt Lake City, UT 84101
P:(801) 961-7070
F:(801) 961-7373

CONSULTANTS

"Engineering Results"
BHB Consulting Engineers
A Professional Corporation
344 West 300 North
Suite 202
Salt Lake City, Utah 84103
Phone: 801.355.5656
Fax: 801.355.5950
Email: bhb@bhbengineers.com

PROFESSIONAL SEAL

LICENSED PROFESSIONAL ENGINEER
CHRISTIAN LEE HOFHEINS
No. 323828
STATE OF UTAH

ISSUE

MARK	DATE	DESCRIPTION
	2/15/06	CONSTRUCTION DOCUMENTS
	1/18/06	FINAL REVIEW SET
	12/21/05	DD REVIEW SET
	9/16/05	PRELIMINARY REVIEW SET

DFCM PROJECT NO:	05059900
BHB PROJECT NO:	05196
DRAWN BY:	C. BROWN
CHECKED BY:	C. HOFHEINS
SCALE:	AS SHOWN
DATE:	FEBRUARY 15, 2006

KEY PLAN

SHEET TITLE

GENERAL STRUCTURAL NOTES

S001

© 2005 ARCHIPLEX GROUP

Q:\05059900\196\Struct\05196_S-001.dwg, 2/14/2006 10:29:17 AM, jsim

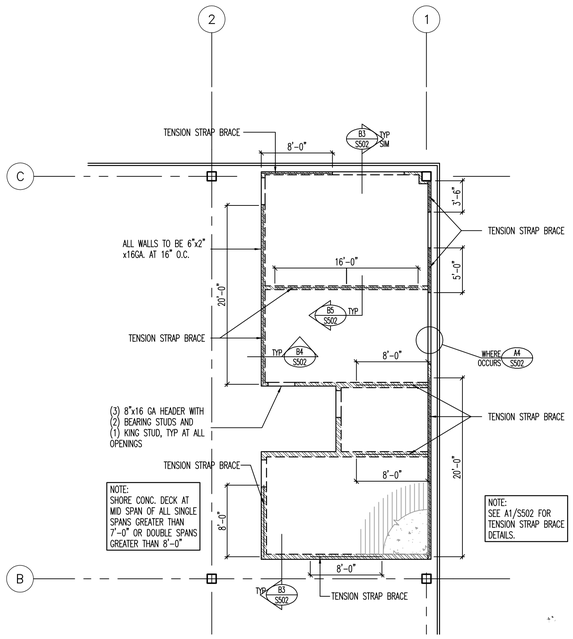

MEZZANINE FRAMING PLAN

SCALE: 1/8"=1'-0" 0 4' 8' 16'

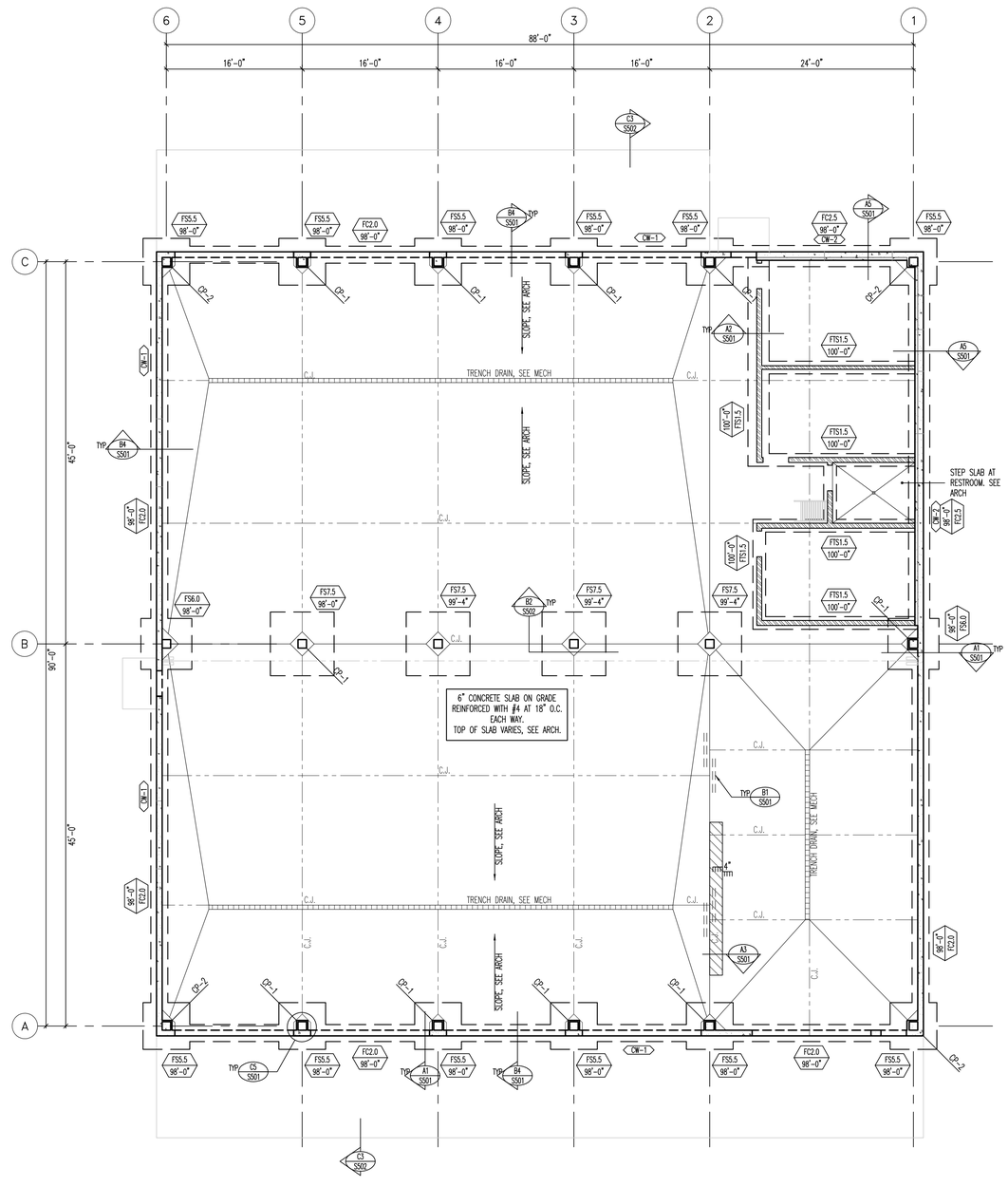

FOOTING AND FOUNDATION PLAN

SCALE: 1/8"=1'-0" 0 4' 8' 16'

NORTH

MARKS AND SYMBOLS LEGEND

- SECTION MARK / SHEET NUMBER
- FOOTING DESIGNATION / TOP OF FOOTING ELEVATION
- INDICATES CONCRETE WALL.
- DEPRESS FOUNDATION WALL AND POUR SLAB OVER. SEE DETAIL B4/S501 AND C3/S502.
- INDICATES CONCRETE OVER METAL FLOOR DECK. SEE GENERAL STRUCTURAL NOTES ON SHEET S001.
- INDICATES 4" THICK CONCRETE HOUSE-KEEPING PAD. REINF WITH #4 BARS AT 12" O.C. EACH WAY
- CWx — INDICATES CONCRETE FOUNDATION WALL TYPE, SEE SCHEDULE ON SHEET S601.
- FCxx — INDICATES CONTINUOUS FOOTING. SEE SCHEDULE ON SHEET S601.
- FSxx — INDICATES SPOT FOOTING. SEE SCHEDULE ON SHEET S601.
- CPx — INDICATES CONCRETE PIER TYPE, SEE SCHEDULE ON SHEET S601.
- C.J. — INDICATES CONTROL/CONSTRUCTION JOINT. SEE DETAILS C3/S501 AND C4/S501.

FOOTING AND FOUNDATION PLAN NOTES

1. COORDINATE LOCATION OF DEPRESSED SLABS, SLOPED SLABS, AND FLOOR DRAINS WITH ARCHITECTURAL AND MECHANICAL DRAWINGS.
2. SEE ARCHITECTURAL AND CIVIL DRAWINGS FOR EXTERIOR CONCRETE WORK AT DOORS, SIDEWALKS, ETC.
4. ALL SPOT FOOTINGS SHALL BE CENTERED UNDER COLUMNS (UNO).
5. SEE DETAILS C1/S501 AND C2/S501 FOR CONDITION WHERE BURIED PIPES RUN PARALLEL AND PERPENDICULAR TO FOOTINGS.
6. SEE DETAIL C3/S501 AND C4/S501 FOR TYPICAL CONTROL/CONSTRUCTION JOINTS IN CONCRETE SLAB ON GRADE AND AT SLAB DEPRESSIONS.
7. SEE DETAIL B1/S501 FOR SLAB REINFORCING WHERE CONTROL JOINTS ARE DISCONTINUOUS.
8. SEE DETAIL B2/S501 FOR ADDITIONAL REINFORCING AT MISCELLANEOUS OPENINGS IN CONCRETE WALLS.
9. SEE DETAIL A3/S501 FOR ANCHORAGE OF HOUSEKEEPING PADS.
10. SEE ARCHITECTURAL DRAWINGS FOR DIMENSIONS TO ALL STEEL COLUMNS.
11. FOOTING AND CONCRETE PIER SIZES SHOWN ARE AN ESTIMATE OF ACTUAL SIZES. ACTUAL SIZES WILL BE PROVIDED AFTER PREFABRICATED METAL BUILDER IS SELECTED. ALL BIDDERS SHALL PROVIDE UNIT PRICES FOR ADDING OR SUBTRACTING VOLUME OF CONCRETE, WEIGHT OF REINFORCING STEEL AND VOLUME OF EARTHWORK.

CLIENT

BRIGHAM CITY
MAINTENANCE FACILITY
STATION #1423
1325 EAST HIGHWAY 90
BRIGHAM CITY, UTAH 84302

DESIGNER

ARCHIPLEX GROUP
architecture · planning · design services
1135 South West Temple, Ste. A
Salt Lake City, UT 84101
P:(801) 961-7070
F:(801) 961-7373

CONSULTANTS

"Engineering Results"
BHB Consulting Engineers
A Professional Corporation
348 West 300 North
Suite 102
Salt Lake City, Utah 84103
Phone: 801.355.5656
Fax: 801.355.5950
Email: bhb@bhbengineers.com

LICENSED PROFESSIONAL ENGINEER
CHRISTIAN LEE HOFHEINS
No. 323828
STATE OF UTAH

PROFESSIONAL SEAL

ISSUE

MARK	DATE	DESCRIPTION
	2/15/06	CONSTRUCTION DOCUMENTS
	1/18/06	FINAL REVIEW SET
	12/21/05	DD REVIEW SET
	9/16/05	PRELIMINARY REVIEW SET

DFCM PROJECT NO:	05059900
BHB PROJECT NO:	05196
DRAWN BY:	C. BROWN
CHECKED BY:	C. HOFHEINS
SCALE:	AS SHOWN
DATE:	FEBRUARY 15, 2006

KEY PLAN

SHEET TITLE

FOOTING AND FOUNDATION PLAN

S101

© 2005 ARCHIPLEX GROUP

Q:\05059\05196\Struct\05196_S-101.dwg, 2/14/2006 10:29:10 AM, jlynn

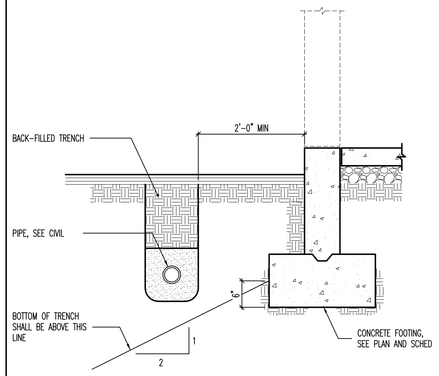

C1 CONDITION AT PIPE PARALLEL TO CONCRETE FOOTING
NO SCALE

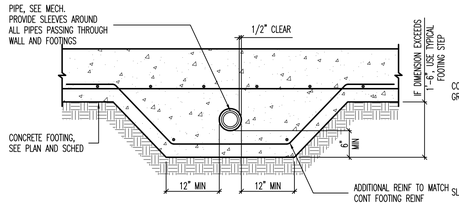

PIPE PASSES BELOW FOOTING

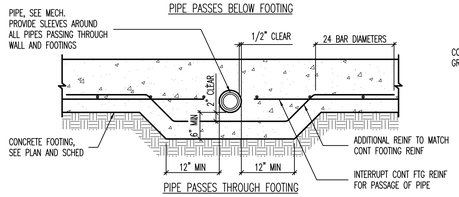

PIPE PASSES THROUGH FOOTING

C2 CONDITIONS AT PIPE PERPENDICULAR TO FOOTING
NO SCALE

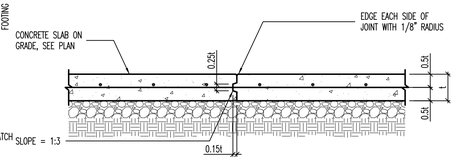

CONSTRUCTION JOINT

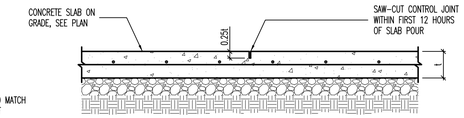

CONTROL JOINT

C3 TYPICAL SLAB ON GRADE JOINT DETAILS
NO SCALE

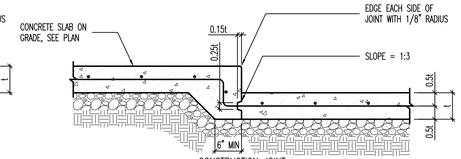

CONSTRUCTION JOINT

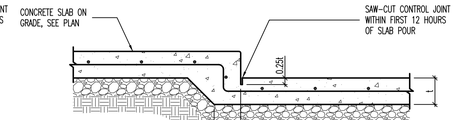

CONTROL JOINT

C4 JOINT DETAILS AT SLAB DEPRESSIONS
NO SCALE

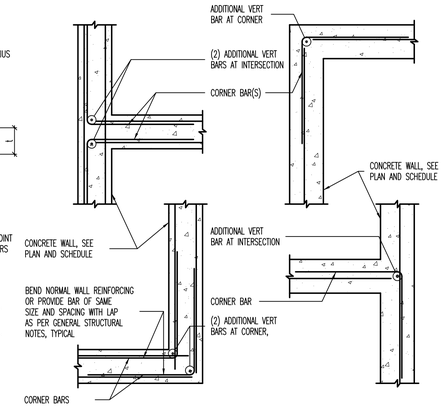

C5 TYPICAL CORNER WALL REINFORCING AT CONCRETE WALLS [PLAN VIEW]
NO SCALE

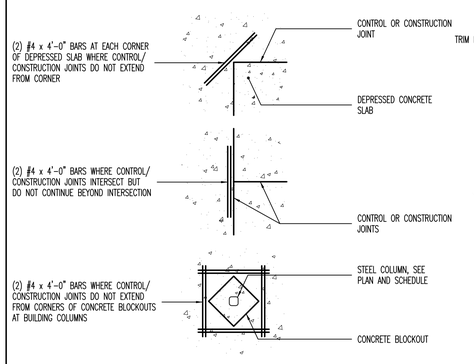

B1 LOCATIONS REQUIRING ADDITIONAL SLAB REINFORCING [PLAN VIEW]
NO SCALE

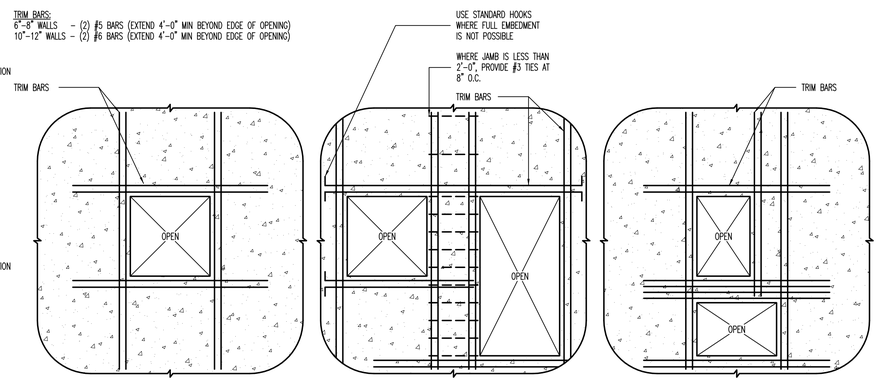

SINGLE OPENING — SIDE-BY-SIDE OPENINGS — STACKED OPENINGS

B2 TYPICAL REINFORCING FOR MISCELLANEOUS OPENINGS LESS THAN 3'-0" IN CONCRETE WALLS
WHERE MISCELLANEOUS OPENING WIDTH IS GREATER THAN 3'-0" WIDE, CONTACT STRUCTURAL ENGINEER.
NO SCALE

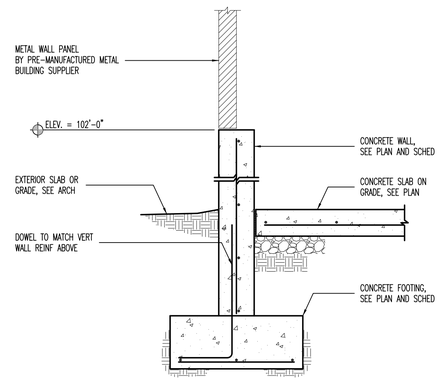

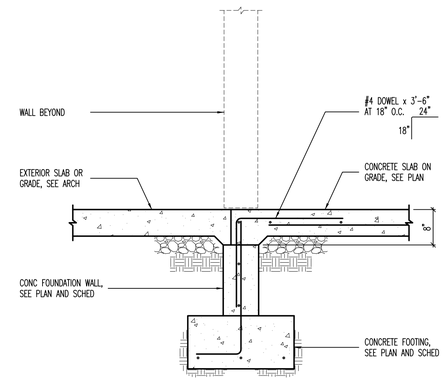

AT OPENING IN WALL

B4 FOUNDATION WALL DETAIL
NO SCALE

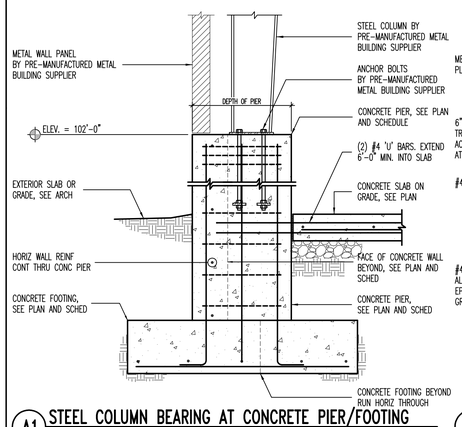

A1 STEEL COLUMN BEARING AT CONCRETE PIER/FOOTING
NO SCALE

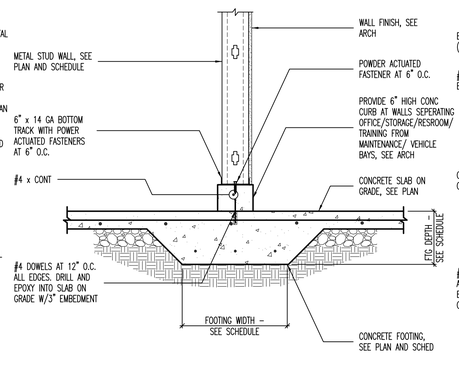

A2 THICKENED SLAB FOOTING AT INTERIOR STUD WALL
NO SCALE

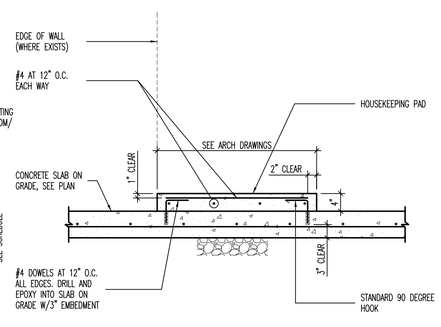

A3 TYPICAL HOUSEKEEPING PAD
NO SCALE

A4 NOT USED

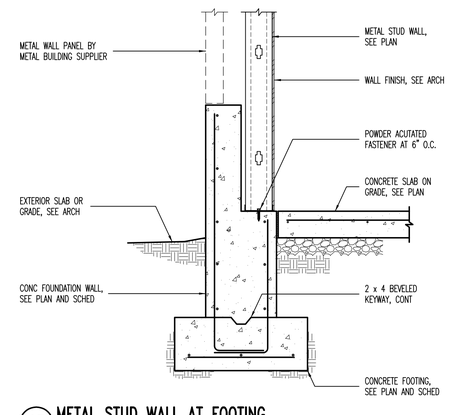

A5 METAL STUD WALL AT FOOTING
NO SCALE

CLIENT

BRIGHAM CITY
MAINTENANCE FACILITY
STATION #1423
1325 EAST HIGHWAY 90
BRIGHAM CITY, UTAH 84302

DESIGNER

ARCHIPLEX GROUP
architecture · planning · design services
1135 South West Temple, Ste. A
Salt Lake City, UT 84101
P:(801) 961-7070
F:(801) 961-7373

CONSULTANTS

"Engineering Results"
BHB Consulting Engineers
A Professional Corporation
344 West 300 North
Suite 102
Salt Lake City, Utah 84103
Phone: 801.355.5656
Fax: 801.355.5950
Email: bhb@bhbengineers.com

PROFESSIONAL SEAL

LICENSED PROFESSIONAL ENGINEER
CHRISTIAN LEE HOFHEINS
No. 323828
STATE OF UTAH

ISSUE

MARK	DATE	DESCRIPTION
	2/15/06	CONSTRUCTION DOCUMENTS
	1/18/06	FINAL REVIEW SET
	12/21/05	DD REVIEW SET
	9/16/05	PRELIMINARY REVIEW SET

DFCM PROJECT NO:	05059900
BHB PROJECT NO:	05196
DRAWN BY:	C. BROWN
CHECKED BY:	C. HOFHEINS
SCALE:	AS SHOWN
DATE:	FEBRUARY 15, 2006

KEY PLAN

SHEET TITLE

FOOTING AND FOUNDATION DETAILS

S501

© 2005 ARCHIPLEX GROUP

Q:\2005\05196\Structural\05196_S-501.dwg, 2/14/2006 10:29:03 AM, jpym

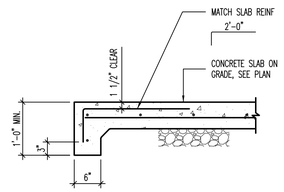

C1 NOT USED

C2 NOT USED

C3 SLAB TURNDOWN DETAIL

NO SCALE

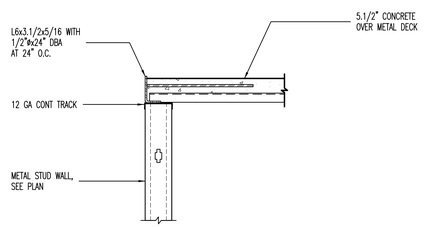

C4 NOT USED

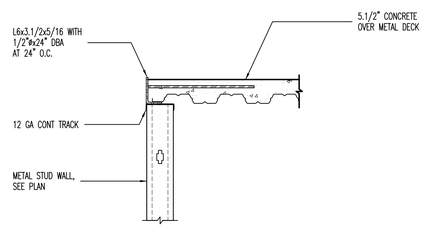

C5 NOT USED

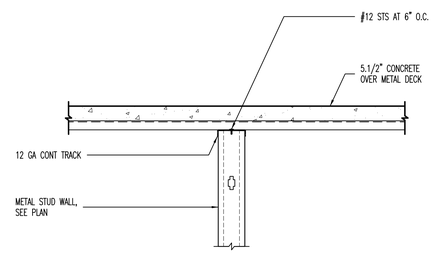

B1 NOT USED

B2 TYPICAL INTERIOR STEEL COLUMN TO FOOTING DETAIL

NO SCALE

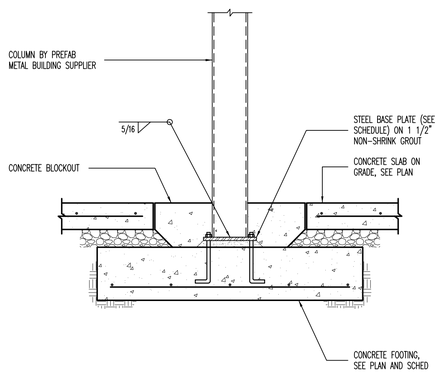

B3 STEEL DECK PERPENDICULAR WITH WALL

NO SCALE

B4 STEEL DECK PARALLEL WITH WALL

NO SCALE

B5 STEEL DECK ON INTERIOR BEARING WALL

NO SCALE

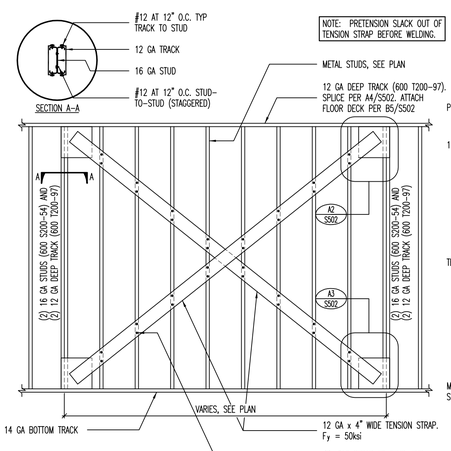

A1 TENSION STRAP BRACE

NO SCALE

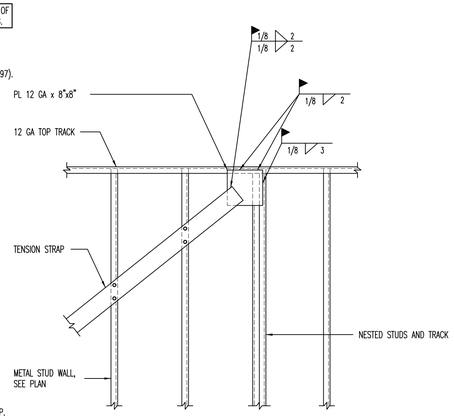

A2 TENSION STRAP BRACE

NO SCALE

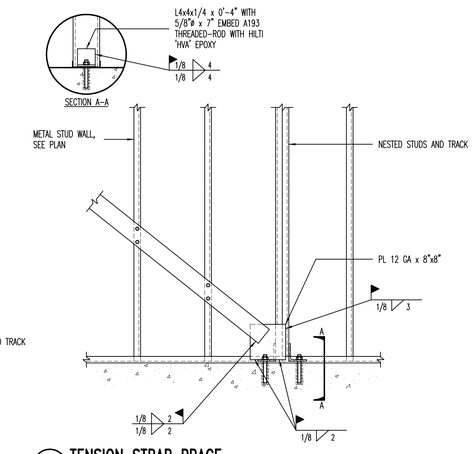

A3 TENSION STRAP BRACE

NO SCALE

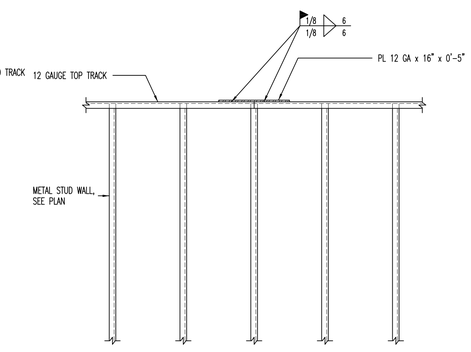

A4 TOP TRACK SPLICE DETAIL

NO SCALE

CLIENT

BRIGHAM CITY
MAINTENANCE FACILITY
STATION #1423
1325 EAST HIGHWAY 90
BRIGHAM CITY, UTAH 84302

DESIGNER

ARCHIPLEX GROUP
architecture · planning · design services
1135 South West Temple, Ste. A
Salt Lake City, UT 84101
P:(801) 961-7070
F:(801) 961-7373

CONSULTANTS

"Engineering Results"
BHB Consulting Engineers
A Professional Corporation
248 West 300 North
Suite 102
Salt Lake City, Utah 84103
Phone: 801.355.5656
Fax: 801.355.5950
Email: bhb@bhbengineers.com

LICENSED PROFESSIONAL ENGINEER
CHRISTIAN LEE HOFHEINS
No. 323828
STATE OF UTAH

PROFESSIONAL SEAL

ISSUE

MARK	DATE	DESCRIPTION
	2/15/06	CONSTRUCTION DOCUMENTS
	1/18/06	FINAL REVIEW SET
	12/21/05	DD REVIEW SET
	9/16/05	PRELIMINARY REVIEW SET

DFCM PROJECT NO:	05059900
BHB PROJECT NO:	05196
DRAWN BY:	C. BROWN
CHECKED BY:	C. HOFHEINS
SCALE:	AS SHOWN
DATE:	FEBRUARY 15, 2006

KEY PLAN

SHEET TITLE

FOOTING AND FOUNDATION DETAILS

S502

© 2005 ARCHIPLEX GROUP

Q:\2005\05196\Structural\05196_S-502.dwg, 2/14/2006 10:28:53 AM, jayem

CONCRETE FOOTING SCHEDULE

MARK	WIDTH	LENGTH	DEPTH	REINFORCING CROSSWISE				REINFORCING LENGTHWISE				COMMENTS
				No.	SIZE	LENGTH	SPACING	No.	SIZE	LENGTH	SPACING	
FTS1.5	1'-6"	CONT	12"	–	–	–	–	2	#4	CONT	EQ	THICKENED SLAB
FC2.0	2'-0"	CONT	12"	–	–	–	–	3	#4	CONT	EQ	
FC2.5	2'-6"	CONT	12"	–	#5	2'-0"	14"	3	#5	CONT	EQ	
FS2.5	2'-6"	2'-6"	12"	3	#5	2'-0"	EQ	3	#5	2'-0"	EQ	
FS3.0	3'-0"	3'-0"	12"	3	#5	2'-6"	EQ	3	#5	2'-6"	EQ	
FS3.5	3'-6"	3'-6"	12"	3	#5	3'-0"	EQ	3	#5	3'-0"	EQ	
FS4.0	4'-0"	4'-0"	12"	4	#5	3'-6"	EQ	4	#5	3'-6"	EQ	
FS4.5	4'-6"	4'-6"	12"	4	#5	4'-0"	EQ	4	#5	4'-0"	EQ	
FS5.0	5'-0"	5'-0"	12"	5	#5	4'-6"	EQ	5	#5	4'-6"	EQ	
FS5.5	5'-6"	5'-6"	12"	5	#5	5'-0"	EQ	5	#5	5'-0"	EQ	
FS6.0	6'-0"	6'-0"	12"	6	#5	5'-6"	EQ	6	#5	5'-6"	EQ	
FS7.5	7'-6"	7'-6"	14"	8	#5	7'-0"	EQ	8	#5	7'-0"	EQ	

CONCRETE FOOTING NOTES:
1. PLACE ALL FOOTING REINFORCING IN THE BOTTOM OF THE FOOTING WITH 3" CLEAR CONCRETE COVER (UNO).
2. TOP REINFORCING, WHERE OCCURS, SHALL BE PLACED IN THE TOP OF THE FOOTING WITH 2" MINIMUM CONCRETE COVER.
3. IF FOOTINGS ARE EARTH-FORMED, FOOTINGS SHALL BE 6" LONGER AND WIDER THAN SCHEDULED.
4. SEE GENERAL STRUCTURAL NOTES FOR ADDITIONAL REQUIREMENTS.
5. SOME SCHEDULED FOOTINGS MAY NOT BE USED, SEE FOOTING AND FOUNDATION PLAN FOR FOOTING MARKS.

C1 CONCRETE FOOTING SCHEDULE
SCHED_CONC_FTG-C3000-S1500

NO SCALE

CONCRETE PIER SCHEDULE

MARK	PIER SIZE	REINFORCING		TYPE	COMMENTS
		VERTICAL	TIES		
CP-1	16" x 22"	(10) #5	(3) #3 AT 8" O.C.	A	POUR PIERS MONOLITHIC
CP-2	23" x 22"	(2) #5	(3) #3 AT 8" O.C.	B	WITH CONCRETE FOUNDATION WALL

CONCRETE PIER NOTES:
1. INSTALL (3) SETS OF TIES AT 3" O.C. AT TOP OF ALL PIERS (UNO).
2. RUN HORIZONTAL CONCRETE WALL REINFORCING CONTINUOUS THROUGH PIER WHEN PIER IS POURED MONOLITHICALLY WITH CONCRETE WALL.
3. SEE GENERAL STRUCTURAL NOTES FOR ADDITIONAL REQUIREMENTS.

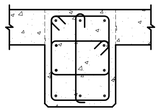

TYPE "A"

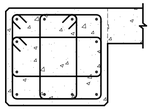

TYPE "B"

C2 CONCRETE PIER SCHEDULE
SCHED_CONC_PIER-01

NO SCALE

EPOXY DOWEL EMBED SCHEDULE

DOWEL SIZE	MINIMUM EMBEDMENT INTO EXISTING CONCRETE
#4	6 1/2"
#5	7 1/2"
#6	10"
#7	1'-1"
#8	1'-4"

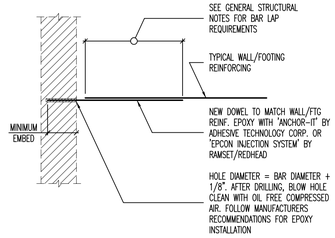

C4 EPOXY DOWEL EMBED SCHEDULE
SCHED_MIS_WALL-01

NO SCALE

CONCRETE WALL SCHEDULE

MARK	THICKNESS	REINFORCING			WALL TYPE	COMMENTS
		VERTICAL	HORIZONTAL	TOP AND BOTTOM		
CW-1	8"	#4 AT 18" O.C.	#4 AT 12" O.C.	(1) #4	A	-
CW-2	8"	#4 AT 18" O.C.	#4 AT 12" O.C.	(1) #4	A	ABV. ELEV. 100'-0"
	16"	#4 AT 18" O.C. E.F.	#4 AT 12" O.C. E.F.	(2) #4	C	BELOW ELEV. 100'-0"

CONCRETE FOUNDATION WALL NOTES:
1. SEE GENERAL STRUCTURAL NOTES FOR ADDITIONAL REQUIREMENTS.
2. CONCRETE FOUNDATION WALLS NOT DESIGNATED ON PLANS SHALL BE REINFORCED AS FOLLOWS:

THICKNESS	VERTICAL REINFORCING	HORIZONTAL REINFORCING
6"	#4 BARS AT 18" O.C.	#4 BARS AT 16" O.C.
8"	#4 BARS AT 18" O.C.	#4 BARS AT 12" O.C.
10"	#4 BARS AT 16" O.C.	#5 BARS AT 15" O.C.
12"	#4 BARS AT 18" O.C. E.F.	#4 BARS AT 16" O.C. E.F.

ABBREVIATIONS:
E.F. EACH FACE
I.F. INSIDE FACE
O.F. OUTSIDE FACE

WALL REINFORCING PLACEMENT TYPES:

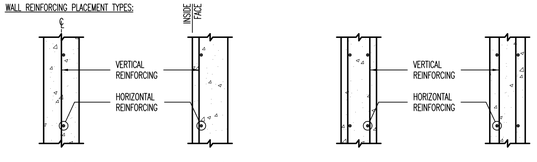

TYPE 'A' TYPE 'B' TYPE 'C' TYPE 'D'

A1 CONCRETE WALL SCHEDULE
SCHED_CONC_WALL-01

NO SCALE

CONCRETE REINFORCING BAR LAP SPLICE SCHEDULE

BAR SIZE	f'c = 3000psi				f'c = 4000psi				f'c = 5000psi				f'c = 6000psi			
	REGULAR		TOP		REGULAR		TOP		REGULAR		TOP		REGULAR		TOP	
	CLASS		CLASS		CLASS		CLASS		CLASS		CLASS		CLASS		CLASS	
	A	B	A	B	A	B	A	B	A	B	A	B	A	B	A	B
#3	13"	17"	17"	21"	12"	16"	16"	21"	12"	16"	16"	21"	12"	16"	16"	21"
#4	17"	22"	22"	28"	15"	19"	19"	25"	13"	17"	17"	22"	12"	16"	16"	21"
#5	21"	27"	27"	35"	18"	24"	24"	31"	16"	21"	21"	27"	15"	19"	19"	25"
#6	27"	36"	36"	46"	24"	31"	31"	40"	21"	28"	28"	36"	20"	25"	25"	33"
#7	37"	48"	48"	63"	32"	42"	42"	54"	29"	38"	38"	49"	27"	34"	34"	44"
#8	49"	64"	64"	82"	42"	55"	55"	71"	38"	49"	49"	64"	35"	45"	45"	58"
#9	62"	80"	80"	104"	54"	70"	70"	90"	48"	62"	62"	81"	44"	57"	57"	74"
#10	78"	102"	102"	132"	68"	88"	88"	115"	61"	79"	79"	102"	56"	72"	72"	94"
#11	96"	125"	125"	162"	83"	108"	108"	141"	76"	97"	97"	126"	68"	88"	88"	115"

CONCRETE REINFORCING BAR LAP SPLICE NOTES:
1. THIS SCHEDULE SHALL BE USED FOR ALL BAR SPLICES IN CONCRETE WALLS, UNLESS NOTED OTHERWISE.
2. CLASS 'A' SPLICES MAY BE USED ONLY IN CASES WHERE 50% OR LESS OF THE BARS ARE SPLICED WITHIN THE LAP SPLICE LENGTH.
3. CLASS 'B' SPLICES SHALL BE USED FOR ALL SPLICES UNLESS THE REQUIREMENTS OF NOTE No. 2 ABOVE ARE MET.
4. TIES AND STIRRUPS SHALL NOT BE SPLICED.
5. SPLICES FOR BUNDLED BARS:
   a. FOR BUNDLED BARS OF THREE OR LESS, LAP SPLICE LENGTHS SHALL BE MULTIPLIED BY 1.2.
   b. FOR BUNDLED BARS OF FOUR OR MORE, LAP SPLICE LENGTHS SHALL BE MULTIPLIED BY 1.33.
   c. INDIVIDUAL BAR SPLICES WITHIN A BUNDLE SHALL NOT OVERLAP.
   d. ENTIRE BUNDLES SHALL NOT BE LAP SPLICED.
6. FOR ALL LIGHTWEIGHT CONCRETE, LAP LENGTHS SHALL BE MULTIPLIED BY 1.3.
7. FOR ALL EPOXY COATED BARS, LAP LENGTHS SHALL BE MULTIPLIED BY 1.3 FOR TOP BARS AND 1.5 FOR REGULAR BARS.
8. TOP BARS ARE CLASSIFIED AS HORIZONTAL BARS WHERE 12", OR MORE, OF FRESH CONCRETE IS CAST BELOW THE REINFORCING BAR.
9. SEE GENERAL STRUCTURAL NOTES FOR ADDITIONAL REQUIREMENTS.

A2 CONCRETE REINFORCING BAR LAP SPLICE SCHEDULE
SCHED_CONC_REINF-01

NO SCALE

CLIENT

BRIGHAM CITY
MAINTENANCE FACILITY
STATION #1423
1325 EAST HIGHWAY 90
BRIGHAM CITY, UTAH 84302

DESIGNER

ARCHIPLEX GROUP
architecture · planning · design services
1135 South West Temple, Ste. A
Salt Lake City, UT 84101
P:(801) 961-7070
F:(801) 961-7373

CONSULTANTS

"Engineering Results"
BHB Consulting Engineers
A Professional Corporation
348 West 300 North
Suite 102
Salt Lake City, Utah 84103
Phone: 801.355.5656
Fax: 801.355.5950
Email: bhb@bhbengineers.com

LICENSED PROFESSIONAL ENGINEER
CHRISTIAN LEE HOFHEINS
No. 323828
STATE OF UTAH

PROFESSIONAL SEAL

ISSUE

MARK	DATE	DESCRIPTION
	2/15/06	CONSTRUCTION DOCUMENTS
	1/18/06	FINAL REVIEW SET
	12/21/05	DD REVIEW SET
	9/16/05	PRELIMINARY REVIEW SET

DFCM PROJECT NO:	05059900
BHB PROJECT NO:	05196
DRAWN BY:	C. BROWN
CHECKED BY:	C. HOFHEINS
SCALE:	AS SHOWN
DATE:	FEBRUARY 15, 2006

KEY PLAN

SHEET TITLE

STRUCTURAL SCHEDULES

S601

© 2005 ARCHIPLEX GROUP

Q:\2005\05196\Struct\05196_S-601.dwg, 2/14/2006 10:28:43 AM, jaym

Copyright (C) 2005 by PVE, Inc. Salt Lake City, Utah. All rights reserved. Unauthorized copying and/or use is illegal and subject to prosecution.

File name: M:\PROJECTS\2005\05153.00\DRAWINGS\M001.DWG Last edited: 12/12/2005 @ 10:08

MECHANICAL LEGEND
(NOT ALL USED)

- RETURN OR EXHAUST DUCT DOWN
- RETURN OR EXHAUST DUCT UP
- SUPPLY AIR DUCT DOWN
- SUPPLY AIR DUCT UP
- SPIN-IN FITTING W/MVD
- FLEXIBLE DUCT
- CEILING SLOT DIFFUSER
- CEILING DIFFUSER
- CEILING EXHAUST GRILLE
- CEILING GRILLE
- ACCESS PANEL
- MANUAL VOLUME DAMPER
- MOTORIZED DAMPER
- FIRE DAMPER
- COMBINATION FIRE/SMOKE DAMPER
- THERMOSTAT OR TEMP SENSOR
- POINT OF CONNECTION TO EXISTING
- DETAIL TAG — DETAIL NO. / DRAWING NO.
- KEYED NOTE — NOTE NO.
- SECTION CUT LINE — SECTION NO. / DRAWING NO.
- CONTROL TRANSFORMER — TRX

GENERAL NOTES:

1. COORDINATE ALL FIRE SPRINKLER HEADS AND AIR DEVICE LOCATIONS WITH REFLECTED CEILING PLANS AND ELECTRICAL DRAWINGS.
2. ALL DUCTWORK SHALL RECEIVE 1" – 1.5 LBS/CU.FT. DUCT LINER, ATTACH TO DUCT WITH MECHANICAL FASTENERS AND TRIM AND SEAL JOINTS. LOW PRESSURE ROUND FLEXIBLE DUCT TO BE 1-½" THICK INSULATED AND A MAXIMUM OF 6 FT. LONG. ALL INSULATION TO MEET NFPA 90 PER UL 181-CLASS 1. NO DUCTBOARD ALLOWED.
3. ALL DUCTWORK IS TO BE LINED OR WRAPPED IF ROUND. NO DUCTBOARD IS ALLOWED.
4. DUCTWORK AND PIPE ROUTING AS SHOWN ON DRAWINGS IS DIAGRAMMATIC AND IS NOT TO BE SCALED. WHERE ALTERNATE ROUTING, OFFSETS AND TRANSITIONS ARE REQUIRED FOR COORDINATION OF WORK, THIS CONTRACTOR SHALL MAKE CHANGES WITHOUT ADDITIONAL COSTS.
5. THIS CONTRACTOR SHALL CLOSELY COORDINATE NEW MECHANICAL WITH NEW ELECTRICAL, ARCHITECTURAL AND BUILDING STRUCTURE.
6. THIS CONTRACTOR SHALL FIELD VERIFY ALL MECHANICAL ITEMS PRIOR TO STARTING NEW WORK. ADDITIONAL COST WILL NOT BE ALLOWED FOR CONTRACTOR'S FAILURE TO BECOME FAMILIAR WITH SITE CONDITIONS.
7. THIS CONTRACTOR SHALL USE SMACNA DUCT CONSTRUCTION STANDARDS FOR SHEET METAL DUCTS. ALL DUCTWORK (UNLESS OTHERWISE NOTED ON FLOOR PLANS) SHALL BE CONSTRUCTED OF 1" W.C. SEAL CLASS "B".
8. ALL MECHANICAL SYSTEMS SHALL BE INSTALLED IN ACCORDANCE WITH THE CURRENT ADOPTED EDITION OF THE BUILDING CODES, FIRE CODES, MECHANICAL CODES AND PLUMBING CODES.
9. THIS CONTRACTOR SHALL PROVIDE SUBMITTALS ON ITEMS LISTED IN MECHANICAL EQUIPMENT LIST TO THE ENGINEER FOR REVIEW PRIOR TO THE ORDER, PURCHASE OR INSTALLATION.
10. ALL DIFFUSERS MUST BE BALANCED TO THE VALUES INDICATED ON THE FLOOR PLANS. PROVIDE BALANCE REPORT TO ENGINEER PRIOR TO PROJECT CLOSEOUT.
11. DUCT DIMENSIONS SHOWN ARE INSIDE CLEAR DIMENSIONS.
12. FIRE SPRINKLER CONTRACTOR SHALL DESIGN AND INSTALL FIRE PROTECTION SYSTEM PER REFLECTED CEILING PLAN AND THE CURRENT ADOPTED EDITION OF NFPA AND BUILDING CODE.
13. EACH TRADE IS RESPONSIBLE THEIR OWN FIRE CAULKING.
14. HOUSEKEEPING PADS FOR ALL EQUIPMENT IS PROVIDED AND INSTALLED BY GENERAL CONTRACTOR. COORDINATE LOCATION WITH MECHANICAL CONTRACTOR.
15. ALL RETURN AIR GRILLES SHALL HAVE SOUND BOOTS W/ LINED INSULATION. INSULATION IS TO BE PAINTED FLAT BLACK.
16. DIVISION 15 TO SUBMIT TO ENGINEER ALL AS-BUILTS OF BUILDINGS MECHANCIAL AND PLUMBING SYSTEMS PRIOR TO JOB COMPLETION AND FINAL PAYMENT.

AIR DEVICE SCHEDULE

GRILLE NUMBER — GRILLE CFM

PLAN CODE	TYPE & DUTY	NECK SIZE	CEILING TYPE	N.C. LEVEL MAX	SP	MAX. CFM	DAMPER	COLOR	MANUFACTURER & MODEL NO.	REMARKS
1	4-WAY SUPPLY	6"ø	SEE PLANS	20	0.05	176	IN DUCT	WHITE	PRICE #SCDA	1 3 4
2	4-WAY SUPPLY	8"ø	SEE PLANS	20	0.05	280	IN DUCT	WHITE	PRICE #SCDA	2 3 4
3	4-WAY SUPPLY	10"ø	SEE PLANS	21	0.05	436	IN DUCT	WHITE	PRICE #SCDA	2 3 4
4	RETURN	12" X 12"	SEE PLANS	15	0.06	630	OBD	WHITE	PRICE #80D	
5	TRANSFER GRILLE	14" X 12"	SEE PLANS	15	0.026	N.A.	N.A.	WHITE	PRICE #STG1-A	5

1 12" X 12" FACE MODULE 2 24" X 24" FACE MODULE 3 3 CONCENTRIC CONES 4 SET FOR HORIZONTAL DISCHARGE
5 CHANNEL BORDER ON BOTH SIDES OF WALL

EXHAUST FAN SCHEDULE

SYMBOL	NO. REQ'D	LOCATION	CFM	TOTAL SP	LB'S	SONES	ROOF OR WALL OPENING	MOTOR HP	MOTOR ø	MOTOR CYCLES	MOTOR VOLTS	MOTOR RPM	COMMENTS
EF-1	AS SHOWN	RESTROOM	120	0.15	22	1.7	8/10	50 WATTS	1	60	120	1200	COOK #GC-240 4 5 6
EF-2	AS SHOWN	VEHICLE SVC BAY	10920	0.25"	685	17.0	57" SQ.	2.0	1	60	208	321	COOK #54XLP 1 2 3 7 8 9

1 PROVIDE INSULATED HOUSING AROUND MOTOR 2 CONTROL WITH CARBON MONOXIDE DETECTOR THROUGH ON/AUTO SWITCH 3 INNER LOCK LOUVER MOTOR WITH FAN MOTOR 4 CEILING GRILLE 5 COOK WCA-2 WALL CAP AND DAMPER 6 CONTROL WITH MOTION DETECTOR 7 OUTLET LOUVER. SEE NOTE 10 ON DWG. M201
8 MOTORIZED DAMPER. INTERLOCK DAMPER WITH FAN MOTOR 9 SAFETY INLET SCREEN

CONDENSING UNIT SCHEDULE

CODE	MFR. & MODEL NO.	SEN. MBH	AMB. TEMP.	SEER	SUCTION TEMP.	FLA	MCA	MOP	VOLTAGE/ PHASE	REMARKS
CU-1	TRANE #2TTB2042A100	31	95	12	45	18.8	23	40	208/1	1 2 3 4 5 6 7 8 9

1 PROVIDE WITH FUSED DISCONNECT 2 CONNECT TO EVAPORATOR COIL IN F-1 3 ANTI-SHORT CYCLE 4 CONVENIENCE OUTLET
5 PROGRAMMABLE THERMOSTAT 6 HIGH/LOW PRESSURE SWITCH 7 FACTORY INSTALLED ACCUMULATOR 8 NOMINAL 3.5 TON UNIT
9 CONDENSER, EVAPORATOR AND FURNACE BY SAME MANUFACTURER

FURNACE SCHEDULE

SYMBOL	INPUT BTU	OUTPUT BTU 2	CFM	EXT S.P.	FAN SPEED	FILTER NO.	FILTER SIZE	MOTOR HP	MOTOR ø	MOTOR CYCLES	MOTOR VOLT	MOTOR DRIVE	MANUFACTURER AND MODEL NO.	COMMENTS
F-1	100,000	93,000	1400	0.5	1100 RPM	1	24"x25"x1"	3/4	60	1	115	DIRECT	TRANE #TUX100C960D	1 3 4 5 6 7

1 AFUE – 93 2 AT ELEVATION 3 R-22 4 PROVIDE W/TXC050C4HPD EVAPORATOR 5 PROPANE GAS KIT 6 CONCENTRIC VENT KIT
7 CONDENSER, EVAPORATOR AND FURNACE BY SAME MANUFACTURER

GAS-FIRED RADIANT HEATERS

SYMBOL	LOCATION	INPUT BTU	WEIGHT	CONFIG	MOTOR AMPS	MOTOR VOLTS	MOTOR ø	MOTOR CYCLES	FLUE SIZE	MAKE AND MODEL NUMBER	COMMENTS
B-1	AS SHOWN	100,000	35	SEE PLANS	1.0 RUN	120	1	60	4"ø	ROBERTS GORDON CO-RAY-VAC #B-10	1 2 3 4

1 ROBERS GORDON #EP-200 VACUUM PUMP, 3/4HP, 120 VOLT 2 PROVIDE FRESH AIR INTAKE 3 7-DAY PROGRAMMABLE THERMOSTAT
4 HEAT TREATED ALUMIZED STEEL TUBE AND POLISHED ALUMINUM REFLECTOR

CLIENT

BRIGHAM CITY
MAINTENANCE FACILITY
STATION #1423
1325 EAST HIGHWAY 90
BRIGHAM CITY, UTAH 84302

DESIGNER

ARCHIPLEX GROUP
architecture · planning · design services
1135 South West Temple, Ste. A
Salt Lake City, UT 84101
P:(801) 961-7070
F:(801) 961-7373

CONSULTANTS

PVE Inc.
Consulting Mechanical Engineers
90 South 400 West, Suite 340
Salt Lake City UT, 84101
Phone: (801) 359-3158
Fax: (801) 521-4114

PROFESSIONAL SEAL

REGISTERED PROFESSIONAL ENGINEER
ALAN D. SPENDLOVE
166911
STATE OF UTAH

NOT VALID UNLESS SIGNED

ISSUE

MARK	DATE	DESCRIPTION
	2/15/06	CONSTRUCTION DOCUMENTS
	1/18/06	FINAL REVIEW SET
	12/21/05	DD REVIEW SET
	9/16/05	PRELIMINARY REVIEW SET

DFCM PROJECT NO:	05059900
ARCHIPLEX PROJECT NO:	050013.01
PVE PROJECT NO:	05153.00
DRAWN BY:	M.M.
CHECKED BY:	A.D.S.
DATE:	FEBRUARY 15, 2006

KEY PLAN

SHEET TITLE

MECHANICAL SCHEDULE SHEET

M001

Copyright (C) 2005 by PVE, Inc. Salt Lake City, Utah. All rights reserved. Unauthorized copying and/or use is illegal and subject to prosecution.

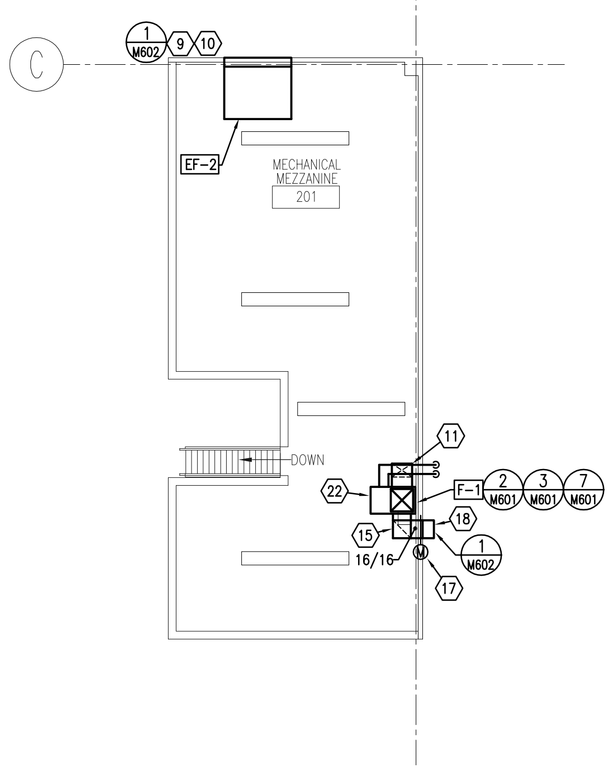

2 M201 MEZZANINE FLOOR PLAN
SCALE:1/8" = 1' - 0" 6' 0 4' 8' 12' 16'

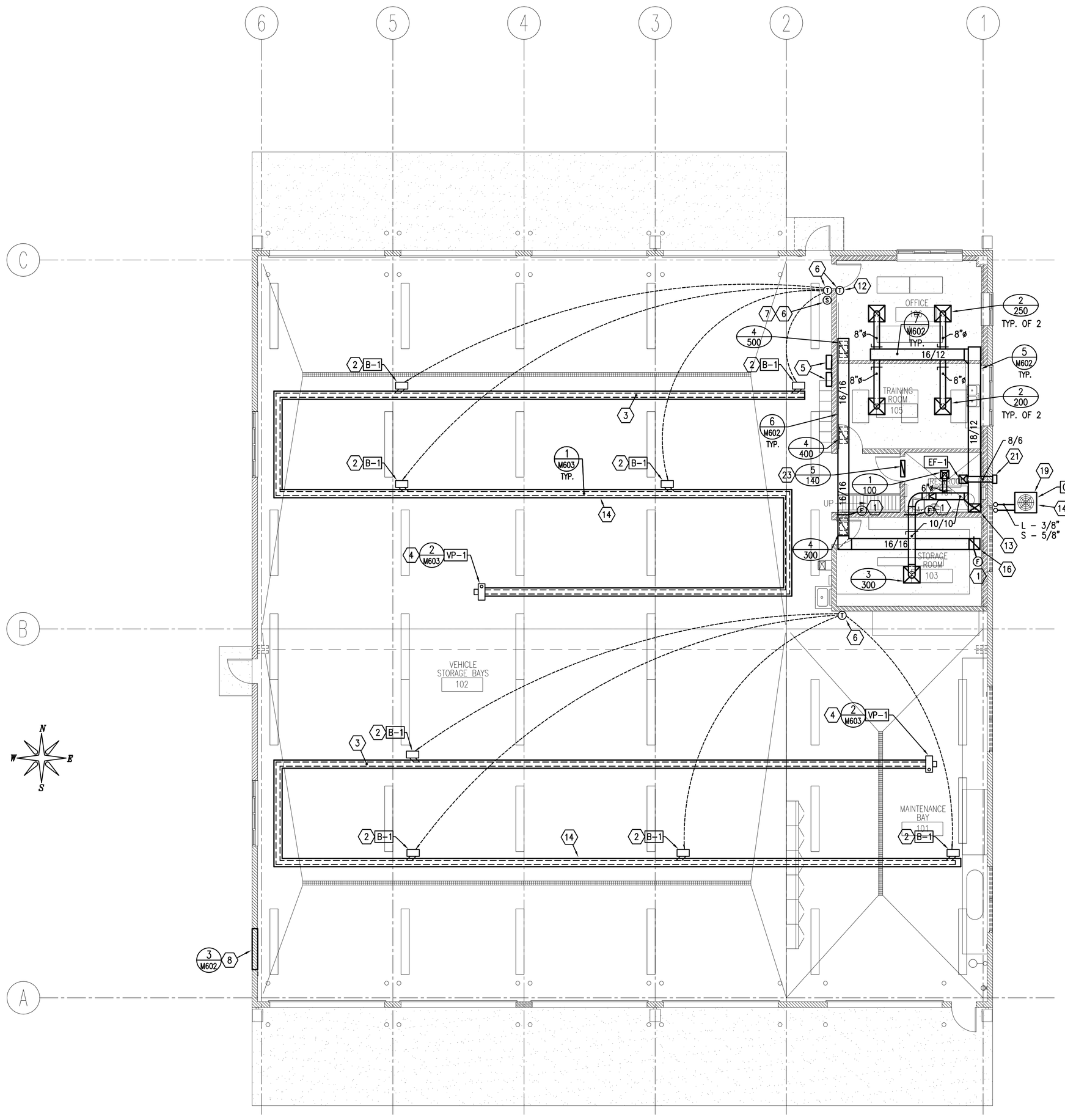

1 M201 MECHANICAL FLOOR PLAN
SCALE:1/8" = 1' - 0" 6' 0 4' 8' 12' 16'

KEYED NOTES:

1. PROVIDE FIRE DAMPER AND DUCT ACCESS DOOR.
2. 4" COMBUSTION THROUGH ROOF.
3. MOUNT RADIANT HEATERS PARALLEL WITH ROLL UP DOORS. (TYPICAL)
4. 4" TYPE B FLUE THROUGH ROOF. INSTALL PER MANUFACTURERS RECOMENDATIONS.
5. RADIANT HEAT SYSTEM CONTROL PANEL.
6. MOUNT 5'-0" AFF.
7. CARBON MONOXIDE DETECTOR. INTERLOCK THROUGH AUTO/ON SWITCH WITH EXHAUST FAN EF-2.
8. 72" X 72" COMBINATION LOUVER, ALUMINUM RUSKIN ELC445D. PROVIDE WITH ACTUATOR. INTERLOCK ACTUATOR WITH EF-2. REFER TO ARCHITECTURAL DRAWINGS FOR LOCATION.
9. REFERENCE ARCH. DRAWINGS FOR LOCATION.
10. 72" X 72" RUSKIN #ELF-445DX LOUVER. LOUVER COLOR BY ARCHITECT.
11. DROP 18" X 12" DUCT DOWN THROUGH FLOOR.
12. THERMOSTAT TO CONTROL F-1.
13. 18" X 12" DUCT UP THROUGH CEILING.
14. MECHANICAL CONTRACTOR SHALL COORDINATE ANY/ALL CHANGES TO SUPPLIED EQUIPMENT ELECTRICAL WITH ELECTRICAL CONTRACTOR.
15. 16" X 16" RETURN DOWN THROUGH FLOOR.
16. 16" X 16" RETURN DUCT UP THROUGH CEILING.
17. INTERLOCK DAMPER MOTOR WITH F-1.
18. 16" X 16" O.S.A. LOUVER. RUSKIN #ELF811DD. PROVIDE INSECT SCREEN AND BALANCING DAMPER. SET DAMPER TO 200 CFM.
19. MOUNT CONDENSING UNIT ON CONCRETE PAD.
20. REFRIGERATION LINE SIZES ARE FOR BIDDING PURPOSES ONLY. PROVIDE REFRIGERATION LINE SETS PER MANUFACTURER'S RECOMMENDATIONS.
21. EXHAUST FAN WALL CAP. REFER TO SCHEDULE.
22. MECHANICAL CONTRACTOR SHALL COORDINATE ANY/ALL CHANGES TO SUPPLIED EQUIPMENT ELECTRICAL WITH ELECTRICAL CONTRACTOR.
23. MOUNT TRANSFER GRILLE ABOVE DOOR WITH CHANNEL BOARDER ON BOTH SIDES OF THE WALL.

CLIENT

BRIGHAM CITY
MAINTENANCE FACILITY
STATION #1423
1325 EAST HIGHWAY 90
BRIGHAM CITY, UTAH 84302

DESIGNER

ARCHIPLEX GROUP
architecture • planning • design services
1135 South West Temple, Ste. A
Salt Lake City, UT 84101
P:(801) 961-7070
F:(801) 961-7373

CONSULTANTS

PVE Inc.
Consulting Mechanical Engineers
90 South 400 West, Suite 340
Salt Lake City UT, 84101
Phone: (801) 359-3158
Fax: (801) 521-4114

PROFESSIONAL SEAL

REGISTERED PROFESSIONAL ENGINEER
ALAN D. SPENDLOVE
166911
STATE OF UTAH

NOT VALID UNLESS SIGNED

ISSUE

MARK	DATE	DESCRIPTION
	2/15/06	CONSTRUCTION DOCUMENTS
	1/18/06	FINAL REVIEW SET
	12/21/05	DD REVIEW SET
	9/16/05	PRELIMINARY REVIEW SET

DFCM PROJECT NO:	05059900
ARCHIPLEX PROJECT NO:	050013.01
PVE PROJECT NO:	05153.00
DRAWN BY:	M.M.
CHECKED BY:	A.D.S.
DATE:	FEBRUARY 15, 2006

KEY PLAN

SHEET TITLE

MECHANICAL FLOOR PLAN

M201

File name: M:\PROJECTS\2005\05153.00\DRAWINGS\M201.DWG Last edited: 01/04/06 @ 15:05

Copyright (C) 2005 by PVE, Inc. Salt Lake City, Utah. All rights reserved. Unauthorized copying and/or use is illegal and subject to prosecution.

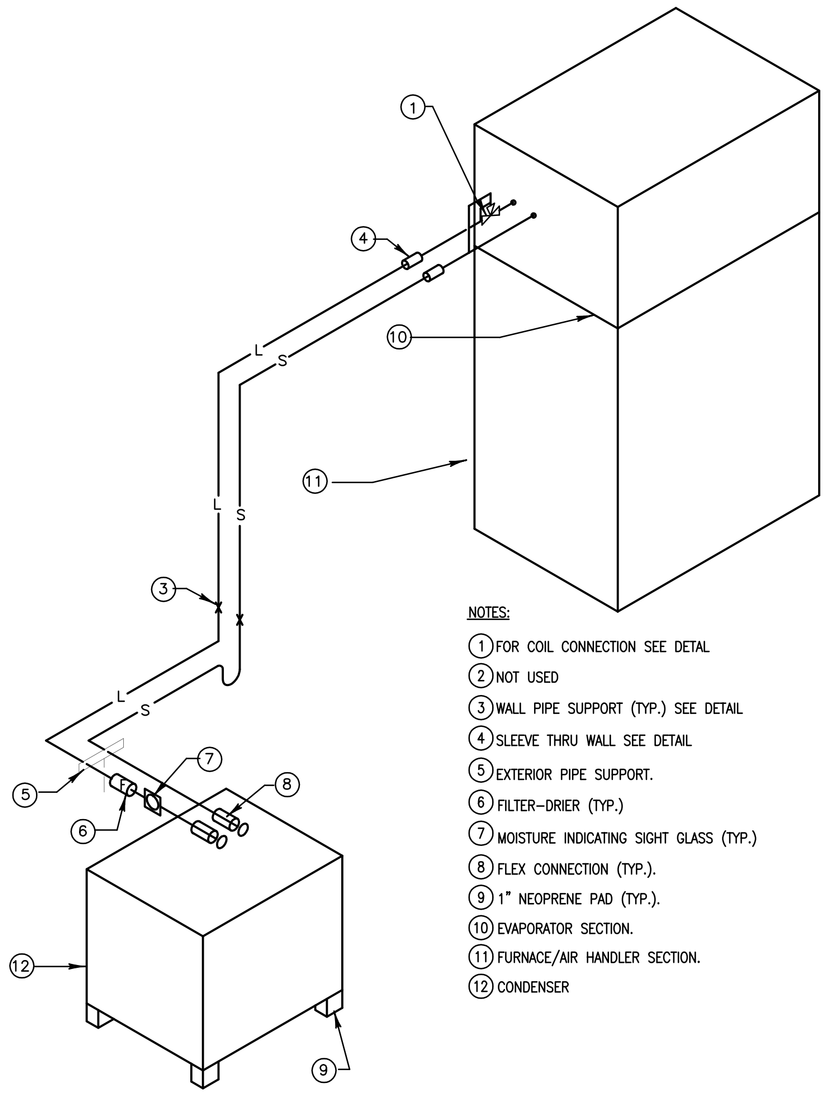

NOTES:

1. FOR COIL CONNECTION SEE DETAL
2. NOT USED
3. WALL PIPE SUPPORT (TYP.) SEE DETAIL
4. SLEEVE THRU WALL SEE DETAIL
5. EXTERIOR PIPE SUPPORT.
6. FILTER-DRIER (TYP.)
7. MOISTURE INDICATING SIGHT GLASS (TYP.)
8. FLEX CONNECTION (TYP.).
9. 1" NEOPRENE PAD (TYP.).
10. EVAPORATOR SECTION.
11. FURNACE/AIR HANDLER SECTION.
12. CONDENSER

1 M601 RERIGERANT PIPING SCHEMATIC DETAIL

NO SCALE

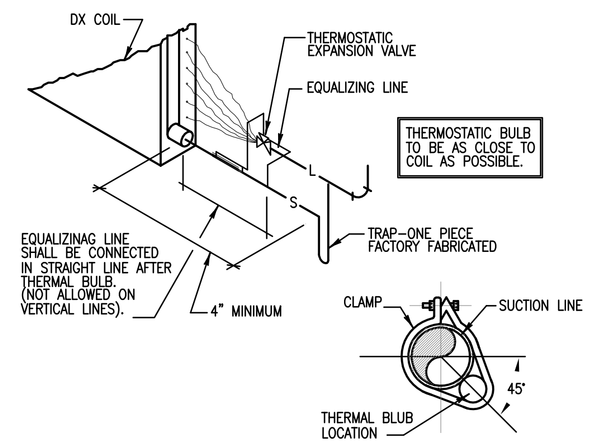

2 M601 REFRIGERANT COIL CONNECTION DETAIL

NO SCALE

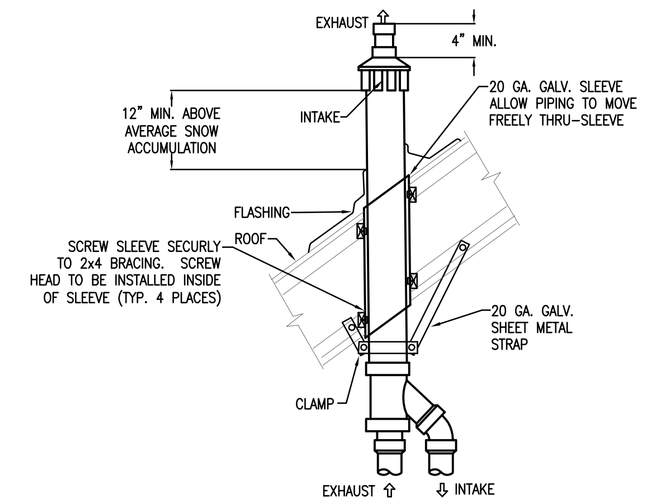

3 M601 CONCENTRIC ROOF TEMINATION DETAIL

NO SCALE

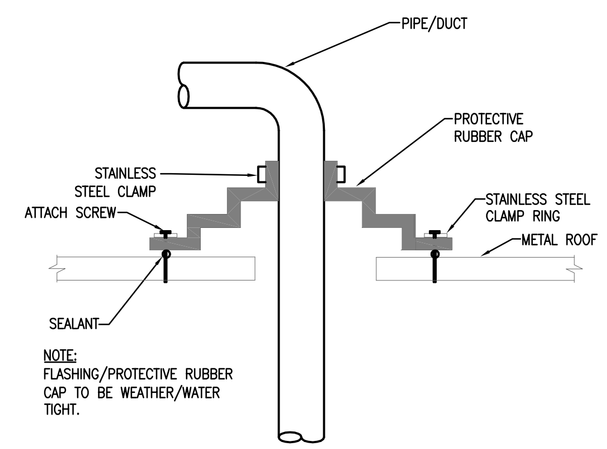

NOTE:
FLASHING/PROTECTIVE RUBBER CAP TO BE WEATHER/WATER TIGHT.

4 M601 METAL ROOF PENETRATION DETAIL

NO SCALE

NOTE:
PROVIDE ON ALL UNACCESSABLE DAMPERS

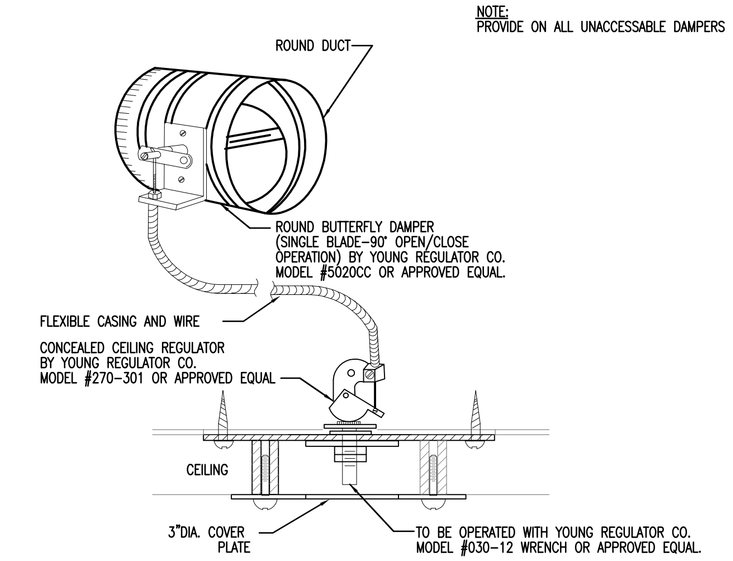

5 M601 DAMPER AND REGULATOR DETAIL

NO SCALE

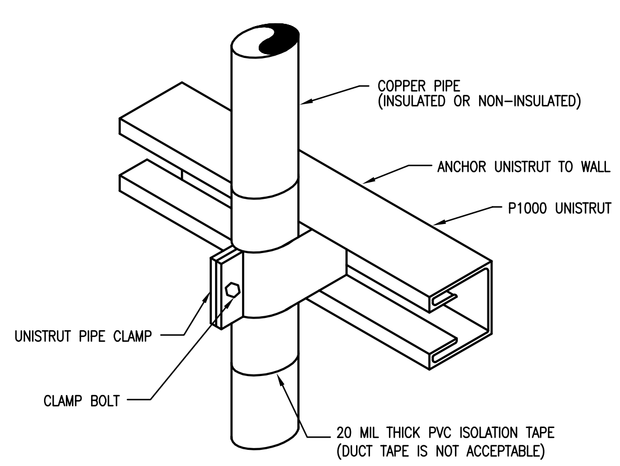

6 M601 PIPE SUPPORT DETAIL

NO SCALE

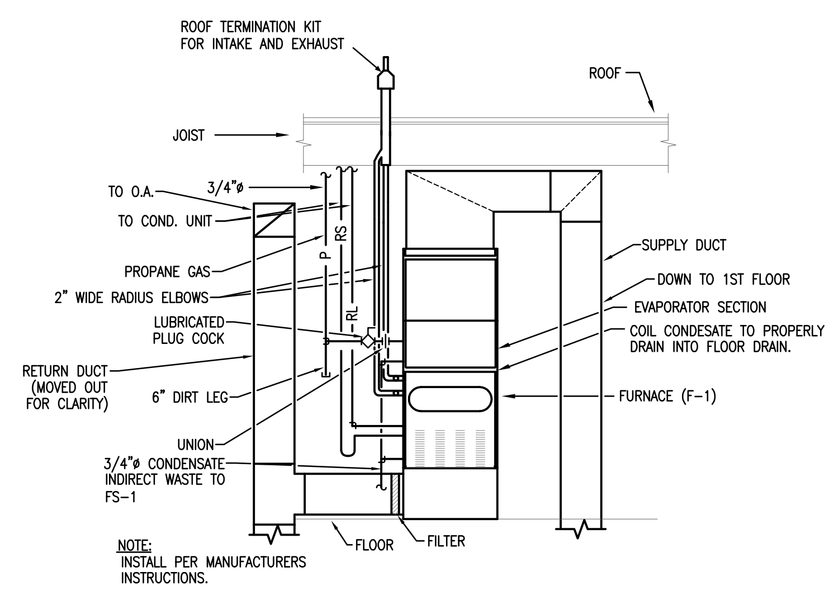

NOTE:
INSTALL PER MANUFACTURERS INSTRUCTIONS.

7 M601 90% EFFICIENT PROPANE FURNACE DETAIL

NO SCALE

CLIENT

BRIGHAM CITY
MAINTENANCE FACILITY
STATION #1423
1325 EAST HIGHWAY 90
BRIGHAM CITY, UTAH 84302

DESIGNER

ARCHIPLEX GROUP
architecture · planning · design services
1135 South West Temple, Ste. A
Salt Lake City, UT 84101
P:(801) 961-7070
F:(801) 961-7373

CONSULTANTS

PVE Inc.
Consulting Mechanical Engineers
90 South 400 West, Suite 340
Salt Lake City UT, 84101
Phone: (801) 359-3158
Fax: (801) 521-4114

PROFESSIONAL SEAL

REGISTERED PROFESSIONAL ENGINEER
ALAN D. SPENDLOVE
166911
STATE OF UTAH

NOT VALID UNLESS SIGNED

ISSUE

MARK	DATE	DESCRIPTION
	2/15/06	CONSTRUCTION DOCUMENTS
	1/18/06	FINAL REVIEW SET
	12/21/05	DD REVIEW SET
	9/16/05	PRELIMINARY REVIEW SET

DFCM PROJECT NO:	05059900
ARCHIPLEX PROJECT NO:	050013.01
PVE PROJECT NO:	05153.00
DRAWN BY:	M.M.
CHECKED BY:	A.D.S.
DATE:	FEBRUARY 15, 2006

KEY PLAN

SHEET TITLE

MECHANICAL DETAIL SHEET

M601

File name: M:\PROJECTS\2005\05153.00\DRAWINGS\M601.DWG Last edited: 12/12/2005 @ 10:08

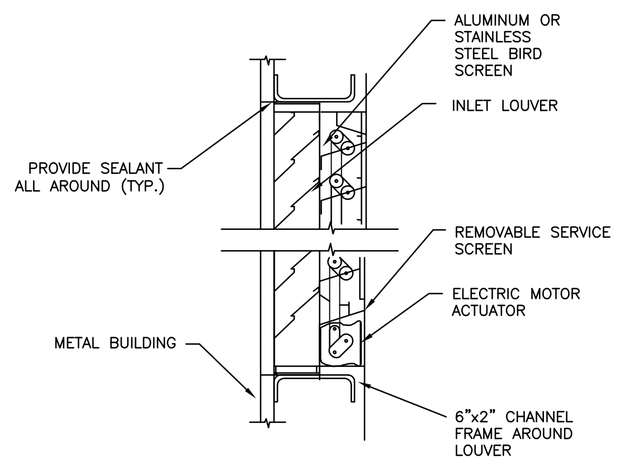

1 M602 INLET / OUTLET LOUVER DETAIL

NO SCALE

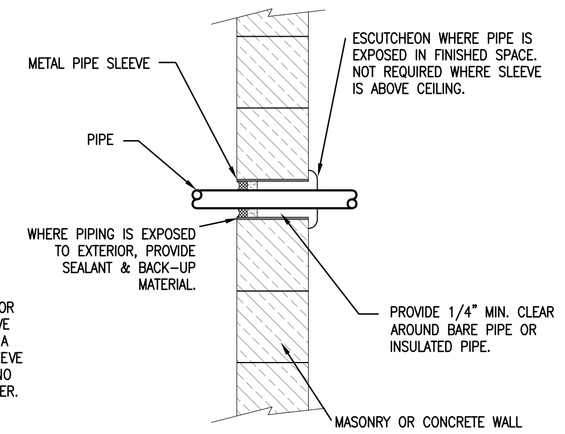

NOTE:
PIPE SLEEVES ARE REQUIRED ON THIS PROJECT. CONTRACTOR SHALL BE REQUIRED TO REMOVE ANY PIPE INSTALLED WITHOUT A PIPE SLEEVE, INSTALL THE SLEEVE AND REINSTALL THE PIPE AT NO ADDITIONAL COST TO THE OWNER.

2 M602 PIPE THRU WALL ABOVE GRADE

NO SCALE

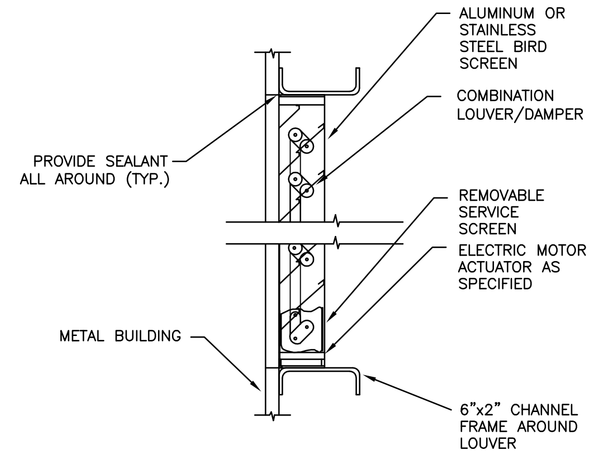

3 M602 COMBINATION LOUVER/DAMPER DETAIL

NO SCALE

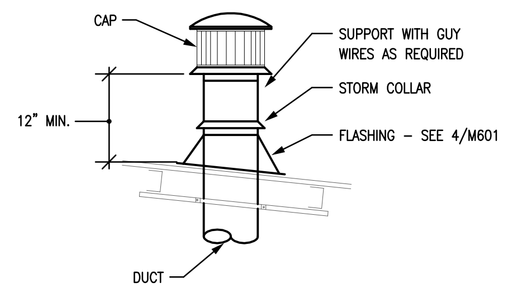

4 M602 INTAKE VENT PIPE DETAIL

NO SCALE

DIMENSION OF LONGEST SIDE, INCHES	SHEET METAL GAGE (ALL FOUR SIDES)	MINIMUM REINFORCING ANGLE SIZE & MAXIMUM LONGITUDINAL SPACING BETWEEN JOINTS &/OR INTERMEDIATE REINFORCING	TRANSVERSE REINFORCING ① AT JOINTS: MIN. H, IN.	DRIVE SLIP / PLAIN S SLIP RECOM-MENDED GAGE	HEMMED S SLIP RECOM-MENDED GAGE	ALTERNT BAR SLIP RECOM-MENDED GAGE	REINFOR. BAR SLIP RECOM-MENDED GAGE	BAR SLIP / ANGLE SLIP RECOM-MENDED GAGE	REINFORCED ANGLE SIZE	STAND. SEAM / ANGLE REINFOR. STAND. SEAM REINFORCED ANGLE SIZE	POCKET LOCK / ANGLE REINFORCED POCKET LOCK RECOM-MENDED GAGE	REINFORCED ANGLE SIZE
UP THRU 12	26	NONE REQ.	1	26	26	24	24	24	NOT REQ.	NOT REQ.	24	NOT REQ.
13 - 18	24	NONE REQ.	1	24	24	24	24	24	NOT REQ.	NOT REQ.	24	NOT REQ.
19 - 30	24	1X1X1/8 @ 60"	1	-	24	24	24	24	NOT REQ.	NOT REQ.	24	NOT REQ.
31 - 42	22	1X1X1/8 @ 60"	1	-	-	22	22	22	NOT REQ.	NOT REQ.	22	NOT REQ.
43 - 54	22	1.5X1.5X1/8@60"	1 1/2	-	-	22	22	22	1.5X1.5X1/8	NOT REQ.	22	NOT REQ.
55 - 60	20	1.5X1.5X1/8@60"	1 1/2	-	-	-	22	22	1.5X1.5X1/8	NOT REQ.	22	NOT REQ.
61 - 84	20	1.5X1.5X1/8@30"	1 1/2	-	-	-	22	22	1.5X1.5X1/8	1.5X1.5X1/8	22	1.5X1.5X1/8

① TRANSVERSE REINFORCING SIZE IS DETERMINED BY DIMENSION OF SIDE TO WHICH ANGLE IS APPLIED

5 M602 DUCT CONSTRUCTION DETAIL

NO SCALE

HANGER SIZES FOR RECTANGULAR DUCT

MAX. SIDE	HANGER	HORIZANTAL SUPPORT ANGLE	MAXIMUM SPACING
30"	(1)26" GAGE STRAP	NONE REQUIRED	10'-0"
36"	1/4" ROUND ROD	1 1/2" X 1 1/2" X 1/8"	8'-0"
48"	1/4" ROUND ROD	2" X 2" X 1/8"	8'-0"
60"	5/16" ROUND ROD	2" X 2" X 1/8"	8'-0"
84"	3/8" ROUND ROD	2" X 2" X 1/8"	8'-0"

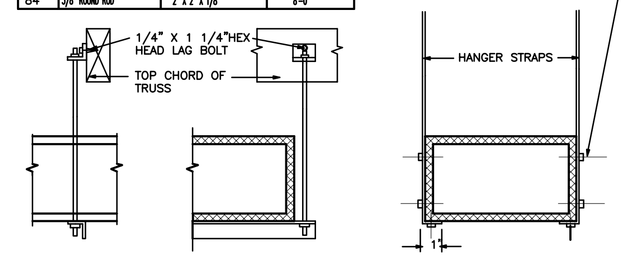

6 M602 DUCT STRAP HANGER DETAIL

NO SCALE

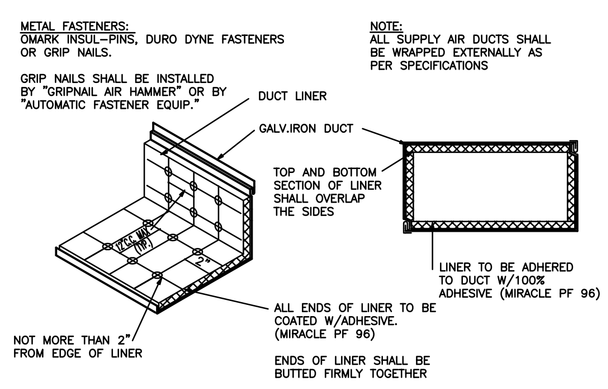

7 M602 DUCT LINER DETAIL

NO SCALE

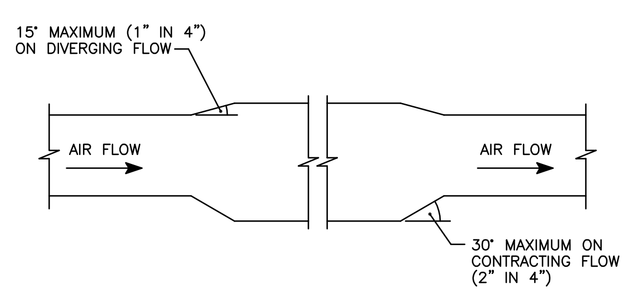

NOTE:
THE 15° MAXIMUM TRANSITION ANGLE NOTED ON THIS DETAIL IS MORE RESTRICTIVE THAN THE SMACNA ALLOWANCE OF 20°.

8 M602 CONVERGING AND DIVERGING TRANSITIONS

NO SCALE

Copyright (C) 2005 by PVE, Inc. Salt Lake City, Utah. All rights reserved. Unauthorized copying and/or use is illegal and subject to prosecution.

File name: M:\PROJECTS\2005\05153.00\DRAWINGS\M602.DWG Last edited: 12/12/2005 @ 10:07

CLIENT

BRIGHAM CITY MAINTENANCE FACILITY
STATION #1423
1325 EAST HIGHWAY 90
BRIGHAM CITY, UTAH 84302

DESIGNER

ARCHIPLEX GROUP
architecture · planning · design services
1135 South West Temple, Ste. A
Salt Lake City, UT 84101
P:(801) 961-7070
F:(801) 961-7373

CONSULTANTS

PVE Inc.
Consulting Mechanical Engineers
90 South 400 West, Suite 340
Salt Lake City UT, 84101
Phone: (801) 359-3158
Fax: (801) 521-4114

PROFESSIONAL SEAL

REGISTERED PROFESSIONAL ENGINEER
ALAN D. SPENDLOVE
166911
STATE OF UTAH

NOT VALID UNLESS SIGNED

ISSUE

MARK	DATE	DESCRIPTION
	2/15/06	CONSTRUCTION DOCUMENTS
	1/18/06	FINAL REVIEW SET
	12/21/05	DD REVIEW SET
	9/16/05	PRELIMINARY REVIEW SET

DFCM PROJECT NO:	05059900
ARCHIPLEX PROJECT NO:	050013.01
PVE PROJECT NO:	05153.00
DRAWN BY:	M.M.
CHECKED BY:	A.D.S.
DATE:	FEBRUARY 15, 2006

KEY PLAN

SHEET TITLE

MECHANICAL DETAIL SHEET

M602

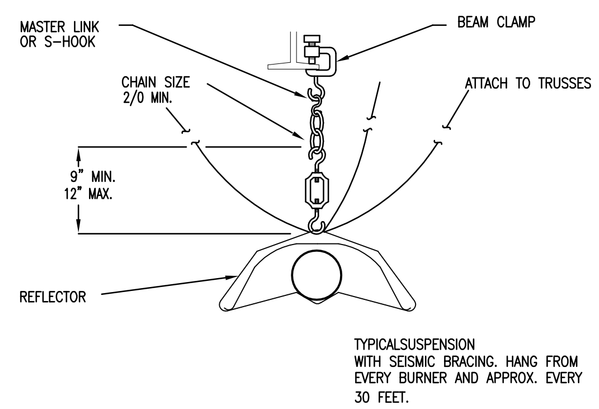

1 M603 RADIANT HEATING SEISMIC DETAIL

NO SCALE

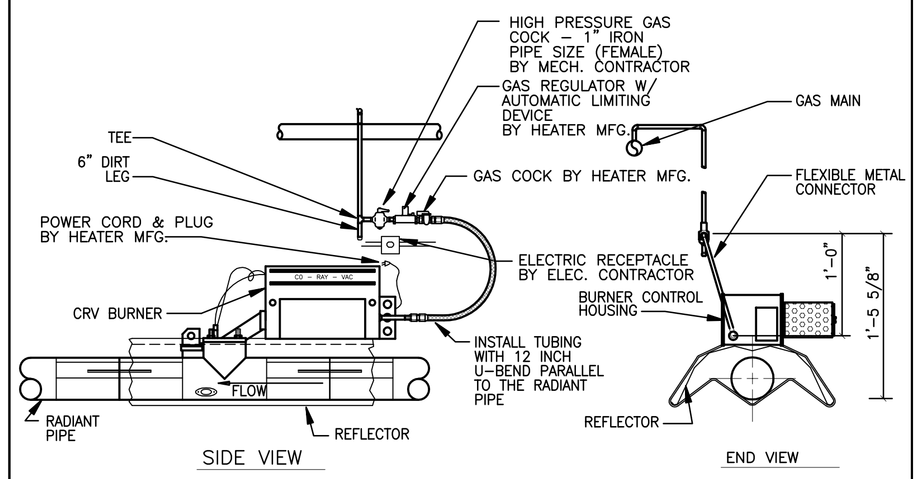

2 M603 GAS CONNECTION TO CRV BURNER DETAIL

NO SCALE

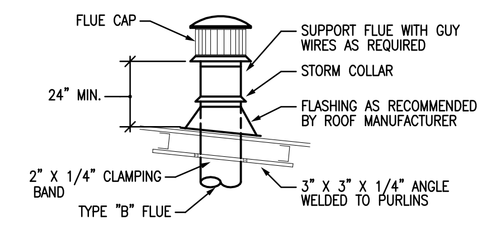

3 M603 FLUE CAP DETAIL

NO SCALE

Copyright (C) 2005 by PVE, Inc. Salt Lake City, Utah. All rights reserved. Unauthorized copying and/or use is illegal and subject to prosecution.

File name: M:\PROJECTS\2005\05153.00\DRAWINGS\M603.DWG Last edited: 12/12/2005 @ 10:07

CLIENT

BRIGHAM CITY
MAINTENANCE FACILITY
STATION #1423
1325 EAST HIGHWAY 90
BRIGHAM CITY, UTAH 84302

DESIGNER

ARCHIPLEX GROUP
architecture • planning • design services
1135 South West Temple, Ste. A
Salt Lake City, UT 84101
P:(801) 961-7070
F:(801) 961-7373

CONSULTANTS

PVE Inc.
Consulting Mechanical Engineers
90 South 400 West, Suite 340
Salt Lake City UT, 84101
Phone: (801) 359-3158
Fax: (801) 521-4114

PROFESSIONAL SEAL

REGISTERED PROFESSIONAL ENGINEER
ALAN D. SPENDLOVE
166911
STATE OF UTAH

NOT VALID UNLESS SIGNED

ISSUE

MARK	DATE	DESCRIPTION
	2/15/06	CONSTRUCTION DOCUMENTS
	1/18/06	FINAL REVIEW SET
	12/21/05	DD REVIEW SET
	9/16/05	PRELIMINARY REVIEW SET

DFCM PROJECT NO:	05059900
ARCHIPLEX PROJECT NO:	050013.01
PVE PROJECT NO:	05153.00
DRAWN BY:	M.M.
CHECKED BY:	A.D.S.
DATE:	FEBRUARY 15, 2006

KEY PLAN

SHEET TITLE

MECHANICAL
DETAIL SHEET

M603

Copyright (C) 2005 by PVE, Inc. Salt Lake City, Utah. All rights reserved. Unauthorized copying and/or use is illegal and subject to prosecution.

PIPING LEGEND
(NOT ALL USED)

GATE VALVE		CHILLED WATER SUPPLY	CHS
OS & Y PATTERN GATE VALVE		CHILLED WATER RETURN	CHR
BALL VALVE		CONDENSER WATER SUPPLY	CWS
BUTTERFLY VALVE		CONDENSER WATER RETURN	CWR
MOTORIZED BUTTERFLY VALVE		HEATING WATER SUPPLY	HWS
HEAT TRACING		HEATING WATER RETURN	HWR
DEIONIZED WATER	DI	WATER TREATMENT	WT
CHECK VALVE		FIRE DEPT. HORN & LIGHT	
SOLENOID VALVE		HOT GAS	HG
AUTOMATIC CONTROL VALVE (2-WAY)		FLEXIBLE PIPE CONNECTION	
AUTOMATIC CONTROL VALVE (3-WAY)		REDUCED PRESSURE BACKFLOW PREVENTER	RPBP
PRESSURE REDUCING VALVE		DIRECTION OF FLOW	
P & T RELIEF VALVE		ELBOW DOWN (DN)	
AIR VENT (AUTOMATIC)		ELBOW UP	
REFRIGERANT LIQUID	RL	PIPE CAP	
REFRIGERANT SUCTION	RS	TEE DOWN	
THERMAL EXPANSION VALVE		UNION	
STRAINER		DOMESTIC COLD WATER	
CIRCUIT SETTER		DOMESTIC HOT WATER	
FLOW METER		HOT WATER CIRC.	
PET COCK OR GAUGE COCK		TEMPERED WATER	T
PRESSURE GAUGE W/GAUGE COCK		SANITARY (PLBG) VENT	
THERMOMETER		SANITARY SEWER ABOVE GRADE	
TEMPERATURE & PRESSURE TEST PLUG		SANITARY SEWER BELOW GRADE	
IN-LINE PUMP		DRAIN	D
FLOW SWITCH		ROOF DRAIN PIPING	RD
AQUASTAT	A	OVERFLOW DRAIN PIPING	OD
HOSE BIBB OR SILLCOCK		STORM DRAIN PIPING ABOVE GRADE	SD
VACUUM	V	STORM DRAIN PIPING BELOW GRADE	SD
FLOOR DRAIN		FIRE SERVICE	F
FLOOR SINK		PROPANE	P
HOT GAS BYPASS	HGBP	COMPRESSED AIR	CA
WALL CLEANOUT OR CLEANOUT		VENT THROUGH ROOF	
FLOOR OR GRADE CLEANOUT		STEAM	S
GRADE CLEANOUT W/ CONCRETE PAD		CONDENSATE	C

GENERAL NOTES:

1. COORDINATE ALL FIRE SPRINKLER HEADS AND AIR DEVICE LOCATIONS WITH REFLECTED CEILING PLANS AND ELECTRICAL DRAWINGS.
2. DUCTWORK AND PIPE ROUTING AS SHOWN ON DRAWINGS IS DIAGRAMMATIC AND IS NOT TO BE SCALED. WHERE ALTERNATE ROUTING, OFFSETS AND TRANSITIONS ARE REQUIRED FOR COORDINATION OF WORK, THIS CONTRACTOR SHALL MAKE CHANGES WITHOUT ADDITIONAL COSTS.
3. THIS CONTRACTOR SHALL CLOSELY COORDINATE NEW MECHANICAL WITH NEW ELECTRICAL, ARCHITECTURAL AND BUILDING STRUCTURE.
4. THIS CONTRACTOR SHALL FIELD VERIFY ALL MECHANICAL ITEMS PRIOR TO STARTING NEW WORK. ADDITIONAL COST WILL NOT BE ALLOWED FOR CONTRACTOR'S FAILURE TO BECOME FAMILIAR WITH SITE CONDITIONS.
5. ALL MECHANICAL SYSTEMS SHALL BE INSTALLED IN ACCORDANCE WITH THE CURRENT ADOPTED EDITION OF THE BUILDING CODES, FIRE CODES, MECHANICAL CODES AND PLUMBING CODES.
6. THIS CONTRACTOR SHALL PROVIDE SUBMITTALS ON ITEMS LISTED IN MECHANICAL EQUIPMENT LIST TO THE ENGINEER FOR REVIEW PRIOR TO THE ORDER, PURCHASE OR INSTALLATION.
7. FIRE SPRINKLER CONTRACTOR SHALL DESIGN AND INSTALL FIRE PROTECTION SYSTEM PER REFLECTED CEILING PLAN AND THE CURRENT ADOPTED EDITION OF NFPA AND BUILDING CODE.
8. ALL DOMESTIC COLD AND DOMESTIC HEATING WATER PIPING SHALL BE TYPE 'L' COPPER. ALL WASTE AND VENT PIPING SHALL BE CAST IRON. ALL ROOF AND OVERFLOW DRAINAGE PIPING TO BE CAST IRON.
9. PROVIDE INSULATION FOR THE FOLLOWING:
   a. DOMESTIC HOT WATER PIPING:
      1" THICK FOR ALL PIPE SIZES.
   b. DOMESTIC COLD WATER PIPING:
      ½" THICK FOR PIPE SIZES ½" TO 6".
      (PROVIDE CONTINUOUS VAPOR BARRIER.)
10. INSULATE PIPING WITH FIBERGLASS PIPE COVERING WITH ALL SERVICE JACKET AND SELF-CAP SEAL. FITTINGS SHALL BE MITERED PIPING COVERING OF GLASS FIBER MOLDED FITTINGS FOR USE IN A RETURN AIR PLENUM. THERMAL CONDUCTIVITY SHALL BE A MAXIMUM OF .25/INCH THICKNESS AT 75°F.
11. EACH TRADE IS RESPONSIBLE THEIR OWN FIRE CAULKING.
12. HOUSEKEEPING PADS FOR ALL EQUIPMENT IS PROVIDED AND INSTALLED BY GENERAL CONTRACTOR. COORDINATE LOCATION WITH MECHANICAL CONTRACTOR.
13. DIVISION 15 TO SUBMIT TO ENGINEER ALL AS-BUILTS OF BUILDINGS MECHANCIAL AND PLUMBING SYSTEMS PRIOR TO JOB COMPLETION AND FINAL PAYMENT.

PLUMBING FIXTURE CONNECTION SCHEDULE

PLAN CODE	DESCRIPTION	CONNECTION SIZE C.W.	H.W.	WASTE	VENT	TRAP	COMMENTS
WC-1	WATER CLOSET	1/2"	-	4"	2"	INT.	FLOOR MOUNTED TANK TYPE, CRANE - HYMONT #31055, 18 INCH RIM HEIGHT, MAXIMUM WATER USAGE OF 1.6 GALLON'S PER FLUSH. TANK TO HAVE PRESSURE ASSISTED FLUSH. SEAT - PROVIDE SPLIT FRONT TYPE WITH CHECK HINGE, BEMIS #1955C PROVIDE CHROME PLATED SUPPLY AND STOP
L-1	LAVATORY	1/2"	1/2"	1-1/2"	1-1/2"	1-1/2"	WALL MOUNTED, CRANE #1412V, HANDICAP TYPE, VITREOUS CHINA, SELF SUPPORTING FIXTURE, SIZE 24"X21". FAUCET AND DRAIN - SYMMONS S-6080 WITH DRAIN GRID, BATTERY OPERATED WITH BATTERY INSIDE BODY OF FAUCET. PROVIDE CHROME PLATED SUPPLIES AND STOPS. DEARBORN, 17 GA TUBE "P" TRAP, CHROME PLATED. FITTINGS AND TRAP TO BE INSULATED TO MEET ADA REQUIREMENTS PROVIDE MCGUIRES PROWRAP. PROVIDE WITH CARRIER.
S-1	UTILITY SINK	1/2"	1/2"	3"	1-1/2"	3"	ELKAY ESSW 2520-C, WALL MOUNTED 304 14 GAUGE STAINLESS STEEL SERVICE SINK WITH HOSE THREAD, VACUUM BREAKER, WALL BRACKET AND PAIL HOOK SPOUT AND LK173 CAST IRON P-TRAP.
U-1	URINAL	3/4"	-	2"	1-1/2"	INT.	WALL MOUNTED URINAL CRANE #7197, 1.0 GPF. VITEROUS CHINA, MOUNT 17" A.F.F. TO MEET ADA REQUIREMENTS. PROVIDE WITH SLOAN #8186 G2 OPTIMA PLUS BATTERY OPERATED FLUSHMETER, FLUSHMETER TO HAVE MANUAL OVERRIDE (URINAL SHALL FIT SPACE AVAILABLE.) PROVIDE CARRIER.
HB-1	HOSE BIBB	3/4"	-	-	-	-	SINGLE SPOUT WITH HOSE CONNECTION. PROVIDE WITH VACUUM BREAKER AND METAL HANDLE. (PLASTIC HANDLES ARE NOT ACCEPTABLE). CHICAGO MODEL NO. 293 WITH E27 VACUUM BREAKER
WH-1	WALL HYDRANT	3/4"	-	-	-	-	WADE W8600,175, NON-FREEZE WALL HYDRANT WITH NICKEL BRONZE BOX, COMPLETE WITH CHROME PLATED LOCKING COVER AND BOX WITH INTEGRAL VACUUM BREAKER. WALL HYDRANT TO BE SIZED FOR WALL THICKNESS.
FD-1	FLOOR DRAIN	-	-	3"	1-1/2"	2"	FLOOR DRAIN J.R. SMITH #2005-A. WITH NICKEL BRONZE STRAINER, TRAP PRIMER CONNECTION AND DEEP SEAL TRAP.
FD-2	FLOOR DRAIN	-	-	4"	2"	4"	SMITH #2340 NB, FLOOR DRAIN WITH SEDIMENT BUCKET, DEEP SEAL P-TRAP, AND NICKEL BRONZE TOP.
ES-1	EMERGENCY EYEWASH & SHOWER	1-1/4"	-	-	-	-	BRADLEY S19-310SBFW, FLOOR MOUNTED SAFETY STATION COMBINATION EYEWASH AND EMERGENCY SHOWER. ALUMINUM FLOOR FLANGE AND GALVANIZED INTERMEDIATE PIPE AND FITTINGS, TWO SOFT STREAM OUTLET HEADS, STAINLESS STEEL BOWL AND STAY OPEN TYPE VALVE ON EYEWASH, ORANGE CYCOLAC PLASTIC SHOWER HEAD WITH STAY OPEN VALVE (OPERATED BY PULL ROD AND HANDLE), 1-1/4" IPS FEMALE INLET AND OUTLET.
S-2	DOUBLE COMPARTMENT SINK	1/2"	1/2"	2"	1-1/2"	2"	JUST #DL-ADA-2233-A-GR, STAINLESS STEEL DOUBLE COMPARTMENT, SELF RIMMING, SIZE 22"X33" OD WITH TWO COMPARTMENTS THAT ARE 16"X14"X8" DEEP, MATERIAL - 18 GAUGE TYPE 304 STAINLESS STEEL, SEAMLESS DIE DRAWN. INTERIOR SURFACES POLISHED TO A NON-POROUS FINISH. UNDERSIDE TO BE FULLY COATED INSULATED FOR SOUND AND CONDENSATION REDUCTION. FAUCET AND DRAIN - GOOSENECK WITH SPRAY. JUST JWF-201 WITH TEAR DROP HANDLES AND JB-99 DRAIN OR APPROVED EQUAL. PROVIDE WITH CHROME PLATED SUPPLY AND STOPS. DEARBORN 17 GA TUBE "P" TRAP, CHROME PLATED.
FS-1	FLOOR SINK	-	-	2"	1-1/2"	2"	FLOOR SINK J.R. SMITH #3020. COMPLETE WITH ACID RESISTANT COATED INTERIOR AND POLISHED ALUMINUM DOME BOTTOM STRAINER
TP-1	TRAP PRIMER	1/2"	-	-	-	-	TRAP PRIMER MIFAB #500 COMPLETE WITH MIFAB MI-GAP AIR GAP FITTING AND STAINLESS STEEL ACCESS DOOR.
DF-1	DRINKING FOUNTAIN	1/2"	-	2"	1-1/2"	2"	ADA COMPLIANT WATER COOLER, 12 GPH, SEMI-RECKSSEL, 115 VOLTS, 400 WATTS, 4.8 AMPS, ELKAY #ESRWC-13.
TD-1	TRENCH DRAIN	-	-	3"	2"	3"	TRENCH DRAIN J.R. SMITH #9931, COMPLETE WITH HEAVY DUTY FRAME, LOAD CLASS C CAST IRON SLOTTED GRATE, FULLY SLOPED CHANNELS.
TMV-1	TEMPERATURE MIXING VALVE	1/2"	1/2"	-	-	-	EMERGENCY FIXTURE THERMOSTATIC MIXING VALVE. BRADLEY #S19-2100 COMPLETE WITH CHROME PLATED FINISH, STAINLESS STEEL SURFACE MOUNTED BOX, INTEGRAL STRAINER CHECK STOPS ON INLET BUILT IN COLD WATER BYPASS, HOT WATER SHUT OFF WHEN COLD SUPPLY IS LOST, OUTLET TEMPERATURE GAUGE. 25 GPM @ 15 PSI PRESSURE DROP. SET TEMPERATURE TO 85°.

GAS FIRED WATER HEATER SCHEDULE

SYMBOL	MFR. CATALOG NO.	SERVICE	CAPACITY GALLONS	FUEL GAS	INPUT BTU	RECOV GPH	TANK SIZE	TEMP F IN/OUT	FLUE SIZE	REMARKS
WH-1	BRADFORD WHITE #M-I-40T6EN (LP)	HOT WATER	40	PROPANE	40,000	41	20"	40°/140°	3"	*

* PROVIDE WITH EXPANSION TANK. A.O. SMITH-AMTROL ST-5-2 GAL, 8"ø x 12"H

AIR COMPRESSOR AC-

PLAN CODE	DUTY	ACFM @ 175 PSI	RECEIVER CAP. (GAL)	ELECTRICAL VOLT/PH	HP	MANUFACTURER & MODEL NO
AC-1	SHOP AIR	24	80V	208/3	7.5	SPEEDAIRE WW GRAINGER #5F565

* START/STOP, WITH PROVISION FOR NO LOAD START. INCLUDE MAGNETIC STARTER

CIRCULATION PUMP SCHEDULE CP-

PLAN CODE	DUTY	GPM	FEET OF HEAD	PUMP RPM	MOTOR H.P.	MOTOR VOLTAGE & PHASE	MANUFACTURER & MODEL NO.	COMMENTS
CP-1	DOMESTIC HOT WATER RECIRCULATION	1	4	3250	1/40	115	TACO #003PNP	SEE HOT WATER HEATER DETAIL FOR INSTALLATION REQ.

CLIENT

BRIGHAM CITY
MAINTENANCE FACILITY
STATION #1423
1325 EAST HIGHWAY 90
BRIGHAM CITY, UTAH 84302

DESIGNER

ARCHIPLEX GROUP
architecture · planning · design services
1135 South West Temple, Ste. A
Salt Lake City, UT 84101
P:(801) 961-7070
F:(801) 961-7373

CONSULTANTS

PVE Inc.
Consulting Mechanical Engineers
90 South 400 West, Suite 340
Salt Lake City UT, 84101
Phone: (801) 359-3158
Fax: (801) 521-4114

PROFESSIONAL SEAL

REGISTERED PROFESSIONAL ENGINEER
ALAN D. SPENDLOVE
166911
STATE OF UTAH

NOT VALID UNLESS SIGNED

ISSUE

MARK	DATE	DESCRIPTION
	2/15/06	CONSTRUCTION DOCUMENTS
	1/18/06	FINAL REVIEW SET
	12/21/05	DD REVIEW SET
	9/16/05	PRELIMINARY REVIEW SET

DFCM PROJECT NO:	05059900
ARCHIPLEX PROJECT NO:	050013.01
PVE PROJECT NO:	05153.00
DRAWN BY:	M.M.
CHECKED BY:	A.D.S.
DATE:	FEBRUARY 15, 2006

KEY PLAN

SHEET TITLE

PLUMBING
SCHEDULE SHEET

P001

File name: M:\PROJECTS\2005\05153.00\DRAWINGS\P001.DWG Last edited: 12/12/2005 @ 10:07

Copyright (C) 2005 by PVE, Inc. Salt Lake City, Utah. All rights reserved. Unauthorized copying and/or use is illegal and subject to prosecution.

File name: M:\PROJECTS\2005\05153.00\DRAWINGS\P201.DWG Last edited: 01/13/2006 @ 08:09

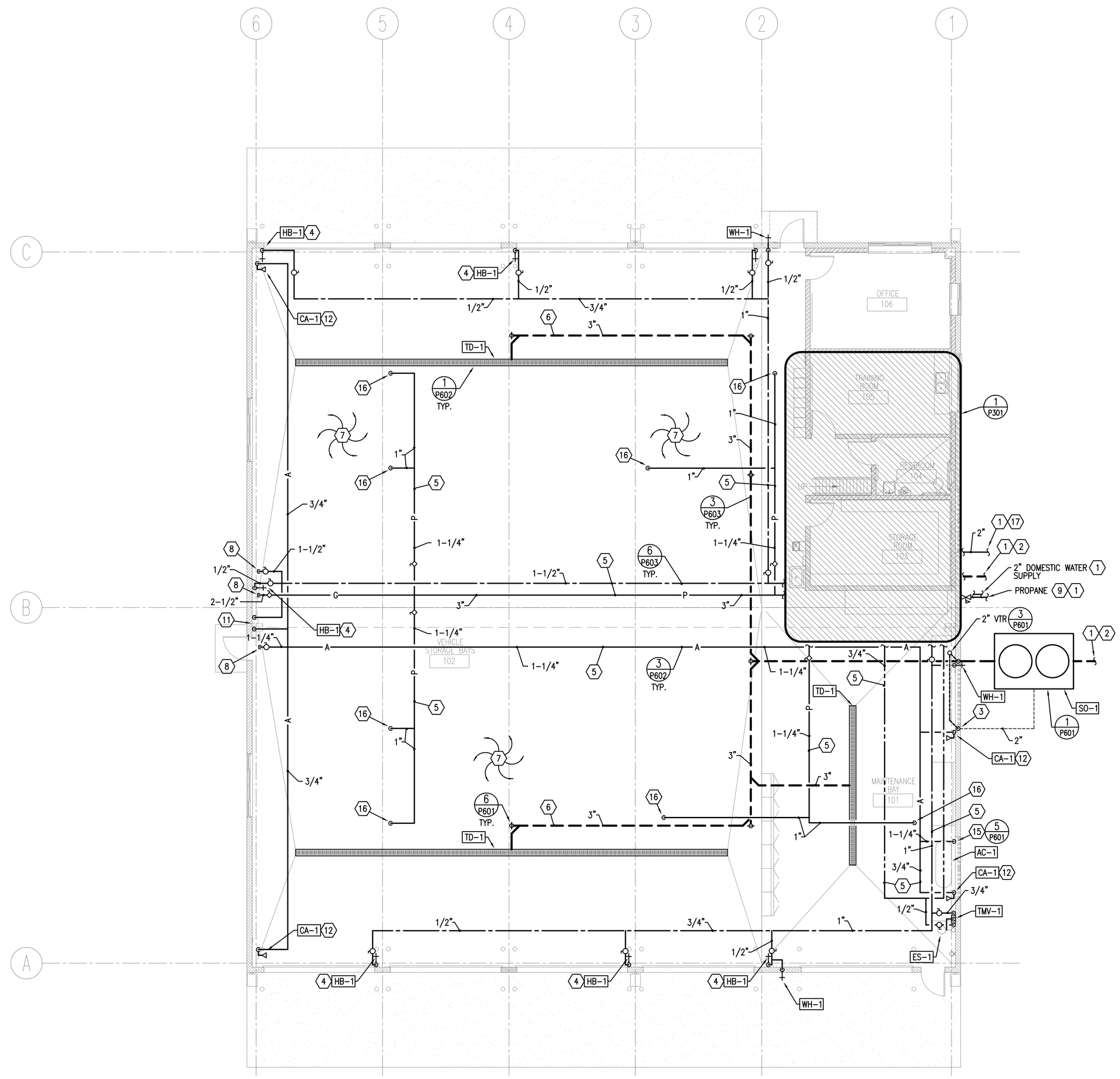

1 P201 PLUMBING FLOOR PLAN

SCALE:1/8" = 1' - 0" 6' 0 4' 8' 12' 16'

KEYED NOTES:

1. SEE SITE DRAWINGS FOR CONTINUATION.
2. SEE CIVIL DRAWINGS FOR INVERT ELEVATION. GENERAL CONTRACTOR IS TO COORDINATE WITH HIS SUBS TO VERIFY SITE SANITARY SEWER AND BUILDING SANITARY SEWER PIPE WILL PROPERLY CONNECT PRIOR TO INSTALLING ANY SANITARY PIPE IN THE SITE OR BUILDING. IF A PROBLEM EXISTS, THE CONTRACTOR IS TO INFORM THE ARCHITECT OF THE PROBLEM PRIOR TO INSTALLING ANY PIPE. IF PIPE IS INSTALLED AND A PROBLEM ARISES, THE CONTRACTOR, AT HIS EXPENSE, SHALL PERFORM ANY WORK REQUIRED SUCH THAT THE SANITARY PIPE CAN BE INSTALLED CORRECTLY TO CODE STANDARDS.
3. VENTS FROM SAND/OIL SEPARATOR MAY BE COMBINED AFTER THEY ARE 10' ABOVE FLOOD RIM OF SEPARATOR AND THEN CONNECTED TO VEHICLE STORAGE BAY WASTE SYSTEM VENT PIPE.
4. PROVIDE PVC COVER OVER INSULATION TO 8'-0" AFF. MOUNT HB-1 3'-0" AFF.
5. ROUTE PIPING ABOVE STRUCTURE.
6. ALL WASTE PIPING 3" AND GREATER TO SLOPE ⅛" PER FOOT.
7. PIPE SLEEVES REQUIRED ON THIS PROJECT. IF CONTRACTOR FAILS TO INSTALL PIPE SLEEVES, THE CONTRACTOR SHALL REMOVE PIPE, INSTALL SLEEVE AND REINSTALL PIPE AT NO ADDITIONAL EXPENSE TO THE OWNER.
8. CAP LINE FOR FUTURE EXPANSION.
9. PROPANE LINE FROM TANKS TO BUILDING WITH REGULATOR ON OUTSIDE OF BUILDING. PROVIDE APPLIANCE REGULATOR AT EACH APPLIANCE TO REDUCE PRESSURE.
10. NOT USED
11. CONNECT 1" COMPRESSED AIR LINE AND ¾" CW LINE TO OVERHEAD HOSE REEL. PROVIDE SHUT-OFF AND UNION. HOSE REEL BY CONTRACTOR.
12. ¾" COMPRESSED AIR DROP DOWN TO QUICK DISCONNECT. PROVIDE SHUT-OFF VALVE. VERIFY MOUNTING HEIGHT WITH OWNER. REFER TO DETAIL 5/P601.
13. NOT USED
14. NOT USED
15. AIR COMPRESSOR BY CONTRACTOR. CONNECT 1-¼" COMPRESSED AIR LINE TO COMPRESSOR. PROVIDE SHUT-OFF VALVE AND UNION.
16. PROPANE LINE DOWN TO BURNER. PROVIDE SHUT-OFF VALVE, UNION AND APPLIANCE REGULATOR REFERENCE DETAIL 2/M603.
17. 2" WATER TO WASH RACK.

CLIENT

BRIGHAM CITY
MAINTENANCE FACILITY
STATION #1423
1325 EAST HIGHWAY 90
BRIGHAM CITY, UTAH 84302

DESIGNER

ARCHIPLEX GROUP
architecture • planning • design services
1135 South West Temple, Ste. A
Salt Lake City, UT 84101
P:(801) 961-7070
F:(801) 961-7373

CONSULTANTS

PVE Inc.
Consulting Mechanical Engineers
90 South 400 West, Suite 340
Salt Lake City UT, 84101
Phone: (801) 359-3158
Fax: (801) 521-4114

PROFESSIONAL SEAL

REGISTERED PROFESSIONAL ENGINEER
ALAN D. SPENDLOVE
166911
STATE OF UTAH

NOT VALID UNLESS SIGNED

ISSUE

MARK	DATE	DESCRIPTION
	2/15/06	CONSTRUCTION DOCUMENTS
	1/18/06	FINAL REVIEW SET
	12/21/05	DD REVIEW SET
	9/16/05	PRELIMINARY REVIEW SET

DFCM PROJECT NO:	05059900
ARCHIPLEX PROJECT NO:	050013.01
PVE PROJECT NO:	05153.00
DRAWN BY:	M.M.
CHECKED BY:	A.D.S.
DATE:	FEBRUARY 15, 2006

KEY PLAN

SHEET TITLE

PLUMBING FLOOR PLAN

P201

Copyright (C) 2005 by PVE, Inc. Salt Lake City, Utah. All rights reserved. Unauthorized copying and/or use is illegal and subject to prosecution.

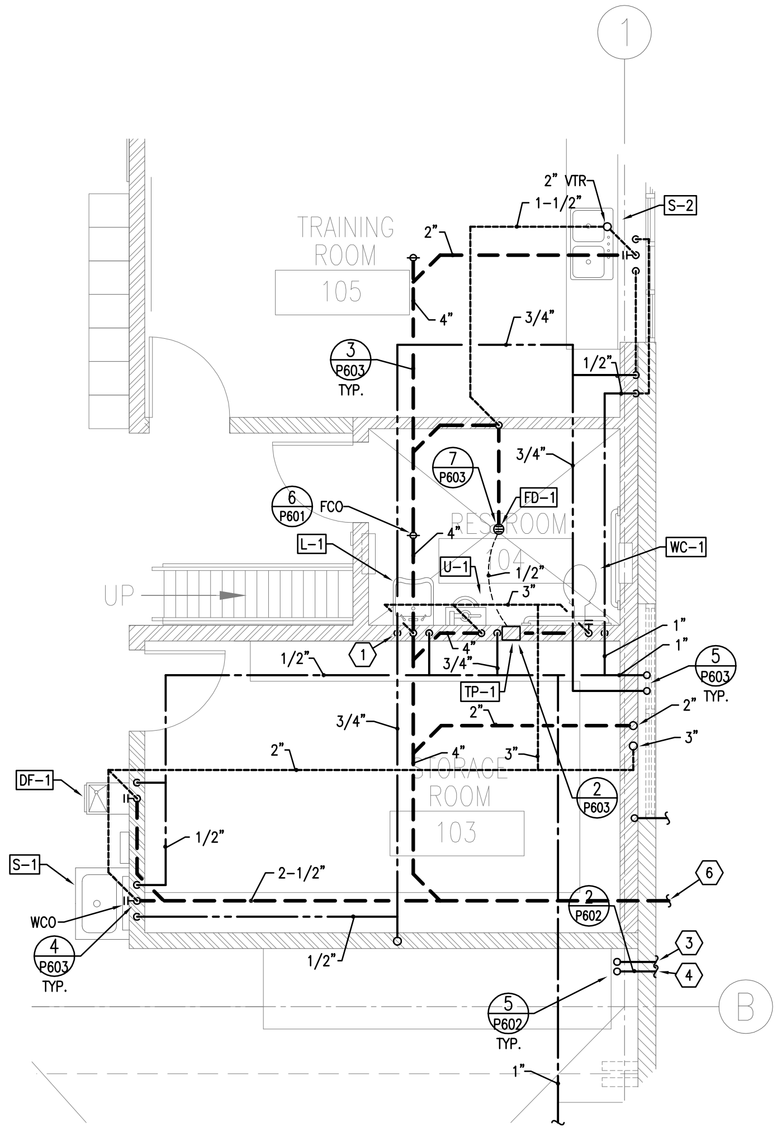

KEYED NOTES:

1. 1/2" HOT WATER DOWN TO L-1
2. 3/4" DRAIN LINE. AIR GAP TO FS-1
3. 2" WATER LINE.
4. 3" PROPANE LINE.
5. WATTS 1-1/2" 009 SERIES REDUCE PRESSURE BACKFLOW PREVENTOR.
6. SEE CIVIL DRAWINGS FOR CONTINUATION.

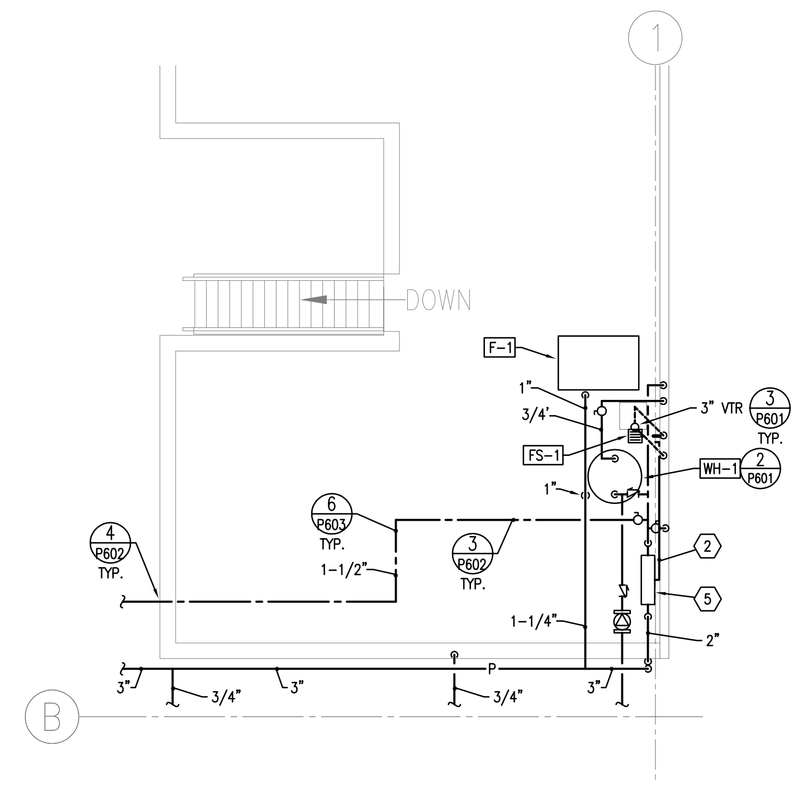

2 P301 MEZZANINE PLUMBING PLAN

SCALE:1/4" = 1' - 0"

1 P301 PLUMBING ENLARGEMENT

SCALE:1/4" = 1' - 0"

6' 0 4' 8' 12' 16'

S E W N

File name: M:\PROJECTS\2005\05153.00\DRAWINGS\P301.DWG Last edited: 01/13/2006 @ 07:37

CLIENT

BRIGHAM CITY
MAINTENANCE FACILITY
STATION #1423
1325 EAST HIGHWAY 90
BRIGHAM CITY, UTAH 84302

DESIGNER

ARCHIPLEX GROUP
architecture • planning • design services
1135 South West Temple, Ste. A
Salt Lake City, UT 84101
P:(801) 961-7070
F:(801) 961-7373

CONSULTANTS

PVE Inc.
Consulting Mechanical Engineers
90 South 400 West, Suite 340
Salt Lake City UT, 84101
Phone: (801) 359-3158
Fax: (801) 521-4114

PROFESSIONAL SEAL

REGISTERED PROFESSIONAL ENGINEER
ALAN D. SPENDLOVE
166911
STATE OF UTAH

NOT VALID UNLESS SIGNED

ISSUE

MARK	DATE	DESCRIPTION
	2/15/06	CONSTRUCTION DOCUMENTS
	1/18/06	FINAL REVIEW SET
	12/21/05	DD REVIEW SET
	9/16/05	PRELIMINARY REVIEW SET

DFCM PROJECT NO:	05059900
ARCHIPLEX PROJECT NO:	050013.01
PVE PROJECT NO:	05153.00
DRAWN BY:	M.M.
CHECKED BY:	A.D.S.
DATE:	FEBRUARY 15, 2006

KEY PLAN

SHEET TITLE

PLUMBING ENLARGEMENTS

P301

Copyright (C) 2005 by PVE, Inc. Salt Lake City, Utah. All rights reserved. Unauthorized copying and/or use is illegal and subject to prosecution.

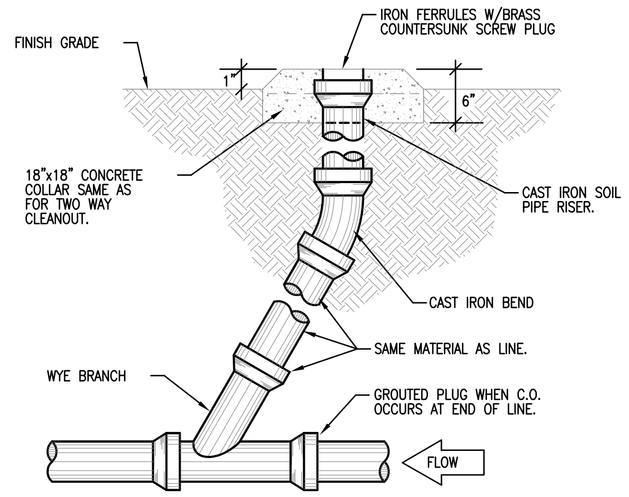

1 P601 EXTERIOR CLEANOUT DETAIL

NO SCALE

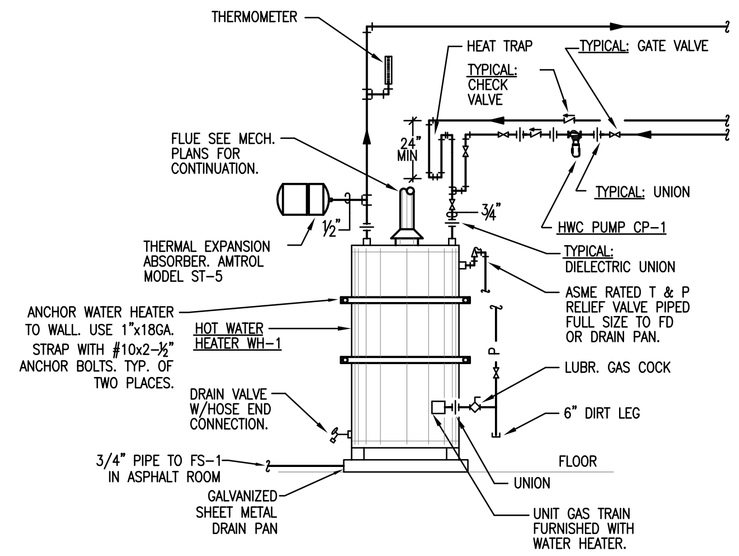

2 P601 GAS FIRED WATER HEATER

NO SCALE

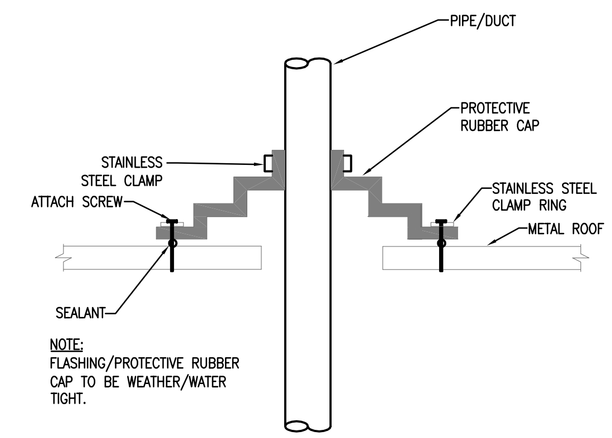

3 P601 METAL ROOF PENETRATION DETAIL

NO SCALE

KEYED NOTES:

1. C.I. PIPE SAME SIZE AS INLET PIPE.
2. (2) 2" VENTS MAY BE CONNECTED TOGETHER +42" AFG WITH COMMON SEPERATE 2" VENT EXTEND TO 3" VTR AS REQUIRED BY BLDG DEPT.

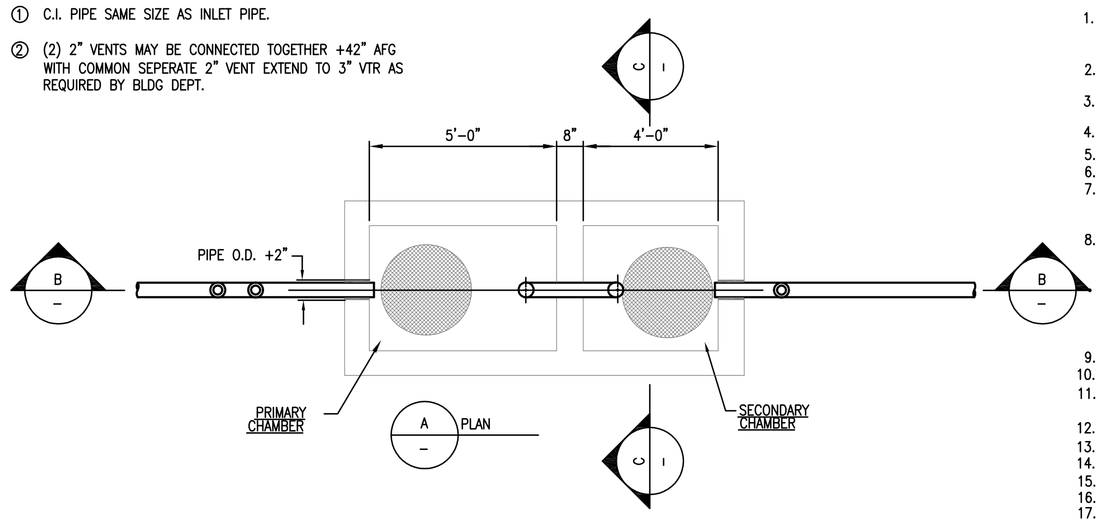

NOTES:

1. PIPING, CLEANOUT CONFIGURATION, SIZE AND TYPE OF PIPING MATERIAL AS PER CITY OR SANITARY DISTRICT. INSPECTION BY SOUTH VALLEY WATER RECLAMATION DISTRICT (SVWRF) PRIOR TO BACKFILLIING IS REQUIRED.
2. INTERCEPTOR PIPING AND OTHER ASSOCIATED PIPING CHANGES THAT ARE NECESSARY TO INSTALL INTERCEPTOR MUST BE IN ACCORDANCE WITH LOCAL REGULATIONS.
3. INTERCEPTOR MUST BE PROPERLY VENTED IN ACCORDANCE WITH INTERNATIONAL PLUMBING CODE STANDARDS.
4. CONCRETE SHALL HAVE A MINIMUM 28 DAY COMPRESSIVE STRENGTH OF 4000 PSI.
5. REINFORCEMENT STEEL SHALL BE ASTEM A605 GRADE 60.
6. THE CONCRETE COVER OVER REINFORCEMENT STEEL SHALL BE A MINIMUM OF 1-½".
7. THE STRUCTURE SHALL BE DESIGNED BY A REGISTERED PROFESSIONAL ENGINEER LICENSED IN THE STATE OF UTAH. THE DESIGNED SHALL BE SUBMITTED FOR APPROVAL TO THE ARCHITECT PRIOR TO INSTALLATION.
8. THE STRUCTURE SHALL BE DESIGNED FOR THE FOLLOWING LOADING CRETERIA.
   A. WALL DESIGN FOR A SATURATED EQUIVLANT FULID AT-REST SOIL PRESSURE OF 90 PCF PLUS TRUCK SURCHARGES.
   B. TRUCK LOADING USING AN AASHTO H-20 TRUCK LOAD.

   MANWAY FRAME & COVER SHALL BE A TRAFFIC TYPE CASTING FOR H-20 TRUCK LOAD.
9. THE INLET PIPE SHALL BE AT AN ELEVATION 1" HIGHER THAN THE OUTLET PIPE.
10. WHERE THE SEWER LINE ALREADY EXIST, THE SEWER INVER INTO AND OUT OF THE INTERCEPTOR SHALL
11. BE 4'-0" ABOVE THE INTERCEPTOR FLOOR.
    THE BAFFLE IN THE INTERCEPTOR SHALL BE WITHIN 3" OF THE CEILING OF THE INTERCEPTOR.
12. COVERS SHALL BE CIRCULAR AND BE SOLID.
13. SANITARY WASTE FROM TOILETS MUST NOT BE POUMBED THROUGH THE INTERCEPTOR.
14. INTERCEPTOR MUST BE LOCATED IN SUCH A MANNER THAT IT IS READILY ACCESSIBLE FOR CLEANING.
15. FIELD VERIFY INVERT ELEVATIONS OF INLET AND OUTLET PIPING PRIOR TO INSTALLING INTERCEPTOR.
16. CONTRACTOR SHALL OBTAIN OFFICIAL SOUTH VALLEY WATER RECLAMATION DISTRICT INTERCEPTOR DESIGN
17. AND INSTALL PER THEIR REQUIREMENTS.

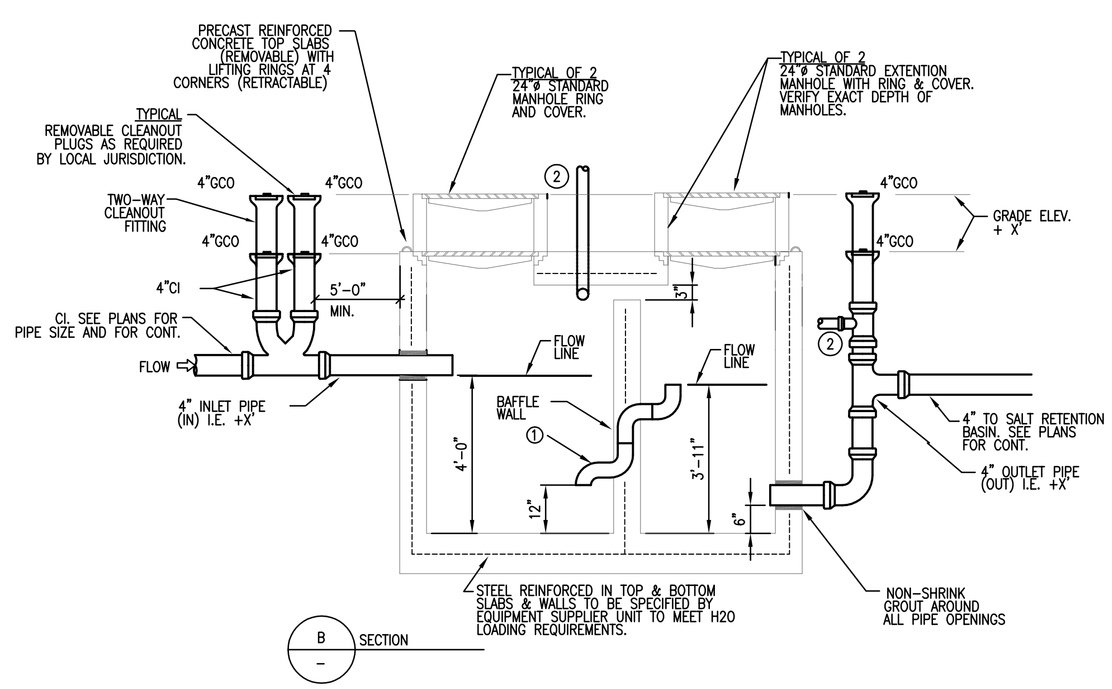

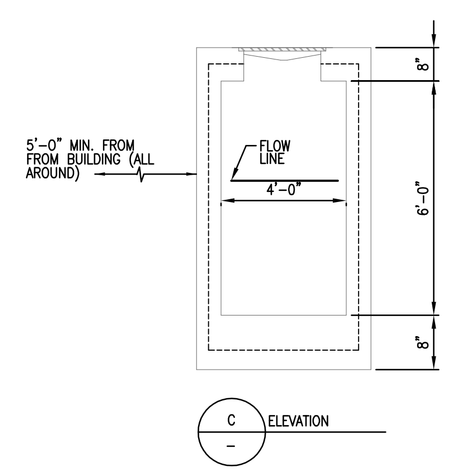

4 P601 1000 GALLON GREASE INTERCEPTOR DETAIL-2 COMPARTMENT

NO SCALE

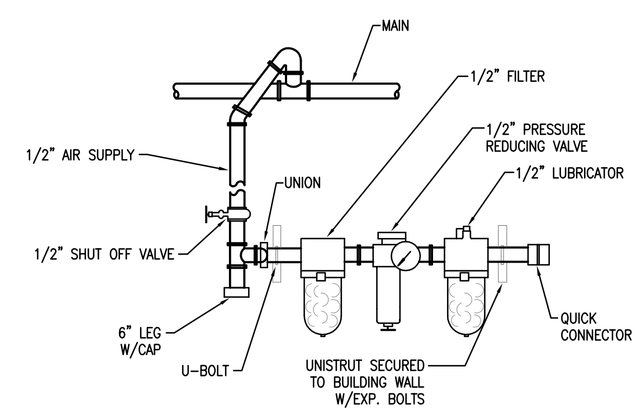

5 P601 COMPRESSED AIR OUTLET CONNECTION DETAIL

NO SCALE

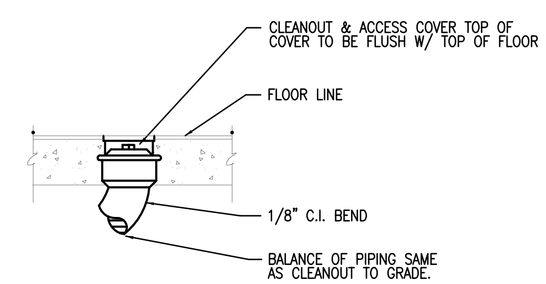

6 P601 FLOOR CLEANOUT

NO SCALE

File name: M:\PROJECTS\2005\05153.00\DRAWINGS\P601.DWG Last edited: 12/12/2005 @ 10:07

CLIENT

BRIGHAM CITY
MAINTENANCE FACILITY
STATION #1423
1325 EAST HIGHWAY 90
BRIGHAM CITY, UTAH 84302

DESIGNER

ARCHIPLEX GROUP
architecture · planning · design services
1135 South West Temple, Ste. A
Salt Lake City, UT 84101
P:(801) 961-7070
F:(801) 961-7373

CONSULTANTS

PVE Inc.
Consulting Mechanical Engineers
90 South 400 West, Suite 340
Salt Lake City UT, 84101
Phone: (801) 359-3158
Fax: (801) 521-4114

PROFESSIONAL SEAL

REGISTERED PROFESSIONAL ENGINEER
ALAN D. SPENDLOVE
166911
STATE OF UTAH

NOT VALID UNLESS SIGNED

ISSUE

MARK	DATE	DESCRIPTION
	2/15/06	CONSTRUCTION DOCUMENTS
	1/18/06	FINAL REVIEW SET
	12/21/05	DD REVIEW SET
	9/16/05	PRELIMINARY REVIEW SET

DFCM PROJECT NO:	05059900
ARCHIPLEX PROJECT NO:	050013.01
PVE PROJECT NO:	05153.00
DRAWN BY:	M.M.
CHECKED BY:	A.D.S.
DATE:	FEBRUARY 15, 2006

KEY PLAN

SHEET TITLE

PLUMBING
DETAIL SHEET

P601

Copyright (C) 2005 by PVE, Inc. Salt Lake City, Utah. All rights reserved. Unauthorized copying and/or use is illegal and subject to prosecution.

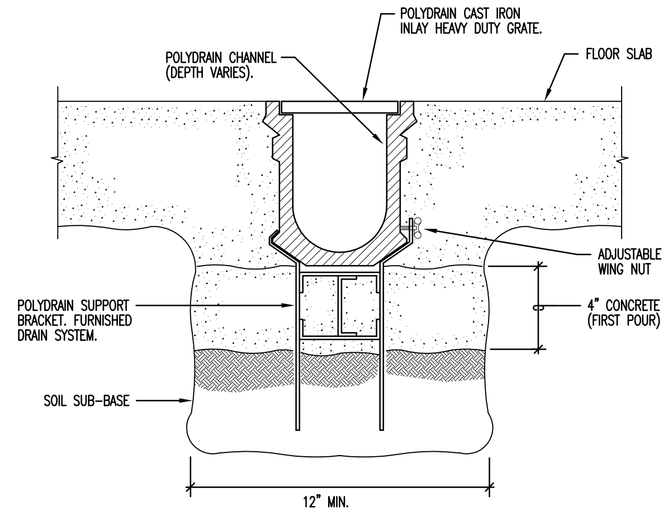

TRENCH DRAIN INSTALLATION

NOTE:
REFER TO ARCHITECTURAL DRAWINGS FOR WEATHERPROOF REQUIREMENTS.

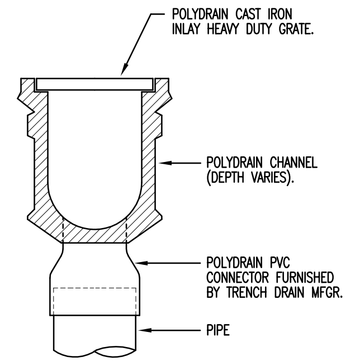

TRENCH DRAIN PIPING

1 / P602 TYPICAL TRENCH DRAIN DETAIL

NO SCALE

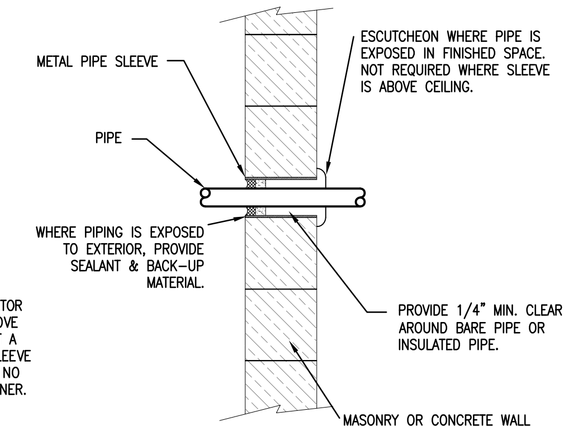

NOTE:
PIPE SLEEVES ARE REQUIRED ON THIS PROJECT. CONTRACTOR SHALL BE REQUIRED TO REMOVE ANY PIPE INSTALLED WITHOUT A PIPE SLEEVE, INSTALL THE SLEEVE AND REINSTALL THE PIPE AT NO ADDITIONAL COST TO THE OWNER.

2 / P602 PIPE THRU WALL ABOVE GRADE

NO SCALE

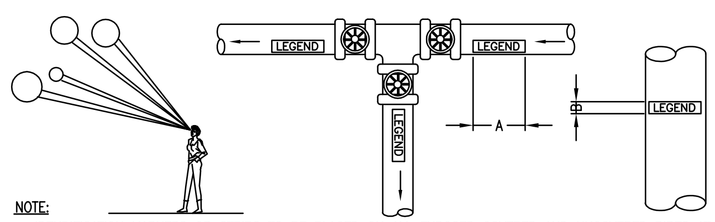

NOTE:
IDENDIFICATION MARKERS OR STRIPS TO BE PLACED ON ALL EXPOSED COVERED AND UNCOVERED PIPES AT 50'-0" INTERVALS AND AT ALL VALVES, BRANCHES, CHANGE IN DIRECTION OF FLOW AND ON BOTH SIDES OF WALLS WHERE PIPES PASS THROUGH SAME, ARROWS OF SAME COLOR AS IDENTIFICATION MARKERS SHALL ALSO BE PLACED ON PIPES POINTING AWAY FROM MARKER INDICATION DIRECTION OF FLOW.

OUTSIDE DIAMETER OF PIPE OR COVERING		LENGTH OF COLOR FIELD A		SIZE OF LETTERS B	
INCHES	MM	INCHES	MM	INCHES	MM
3/4" TO 1-1/4"	19 TO 32	8"	200	1/2"	13
1-1/2" TO 2"	38 TO 51	8"	200	3/4"	19
2-1/2" TO 6"	64 TO 150	12"	300	1-1/4"	32
8" TO 10"	200 TO 250	24"	600	2-1/2"	64
OVER 10"	OVER 250	32"	800	3-1/2"	89

SERVICE	BACKGROUND OR COLOR BAND	IDENTIFICATION MARKER
DOMESTIC COLD WATER	GREEN	WHITE ON GREEN
DOMESTIC HOT WATER	YELLOW	BLACK ON YELLOW
DOMESTIC HOT WATER RETURN	YELLOW	BLACK ON YELLOW
FIRE PROTECTION (SPRINKLER)	RED	WHITE ON RED
NATURAL GAS	YELLOW	BLACK ON YELLOW
SANITARY DRAIN	GREEN	WHITE ON GREEN
STORM WATER	GREEN	WHITE ON GREEN

3 / P602 PIPE IDENTIFICATION DETAIL

NO SCALE

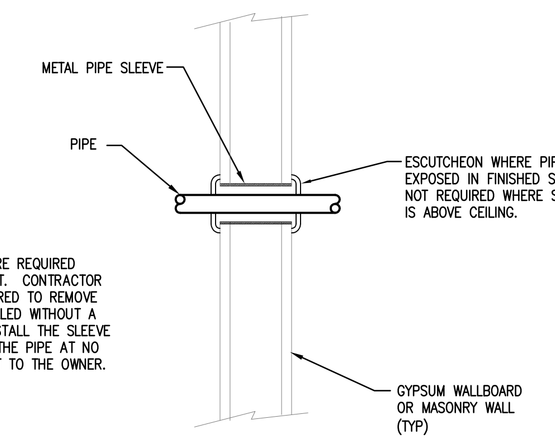

NOTE:
PIPE SLEEVES ARE REQUIRED ON THIS PROJECT. CONTRACTOR SHALL BE REQUIRED TO REMOVE ANY PIPE INSTALLED WITHOUT A PIPE SLEEVE, INSTALL THE SLEEVE AND REINSTALL THE PIPE AT NO ADDITIONAL COST TO THE OWNER.

4 / P602 PIPING THRU GYPSUM WALL

NO SCALE

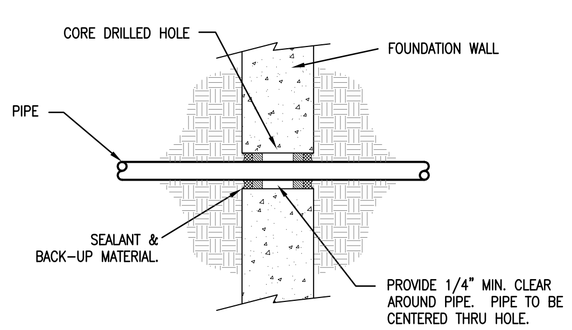

NOTE:
PIPE SLEEVES ARE REQUIRED ON THIS PROJECT. CONTRACTOR SHALL BE REQUIRED TO REMOVE ANY PIPE INSTALLED WITHOUT A PIPE SLEEVE, INSTALL THE SLEEVE AND REINSTALL THE PIPE AT NO ADDITIONAL COST TO THE OWNER.

5 / P602 PIPE THRU WALL - BELOW GRADE

NO SCALE

CLIENT

BRIGHAM CITY
MAINTENANCE FACILITY
STATION #1423
1325 EAST HIGHWAY 90
BRIGHAM CITY, UTAH 84302

DESIGNER

ARCHIPLEX GROUP
architecture • planning • design services
1135 South West Temple, Ste. A
Salt Lake City, UT 84101
P:(801) 961-7070
F:(801) 961-7373

CONSULTANTS

PVE Inc.
Consulting Mechanical Engineers
90 South 400 West, Suite 340
Salt Lake City UT, 84101
Phone: (801) 359-3158
Fax: (801) 521-4114

PROFESSIONAL SEAL

REGISTERED PROFESSIONAL ENGINEER
ALAN D. SPENDLOVE
166911
STATE OF UTAH

NOT VALID UNLESS SIGNED

ISSUE

MARK	DATE	DESCRIPTION
	2/15/06	CONSTRUCTION DOCUMENTS
	1/18/06	FINAL REVIEW SET
	12/21/05	DD REVIEW SET
	9/16/05	PRELIMINARY REVIEW SET

DFCM PROJECT NO:	05059900
ARCHIPLEX PROJECT NO:	050013.01
PVE PROJECT NO:	05153.00
DRAWN BY:	M.M.
CHECKED BY:	A.D.S.
DATE:	FEBRUARY 15, 2006

KEY PLAN

SHEET TITLE

PLUMBING DETAIL SHEET

P602

File name: M:\PROJECTS\2005\05153.00\DRAWINGS\P602.DWG Last edited: 12/12/2005 @ 10:07

Copyright (C) 2005 by PVE, Inc. Salt Lake City, Utah. All rights reserved. Unauthorized copying and/or use is illegal and subject to prosecution.

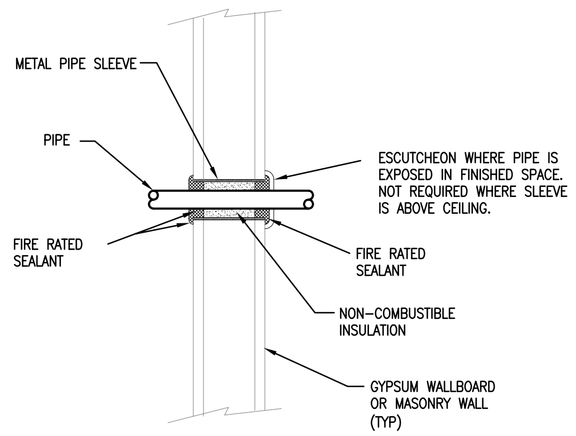

1 P603 PIPING THRU FIRE-RATED WALL

NO SCALE

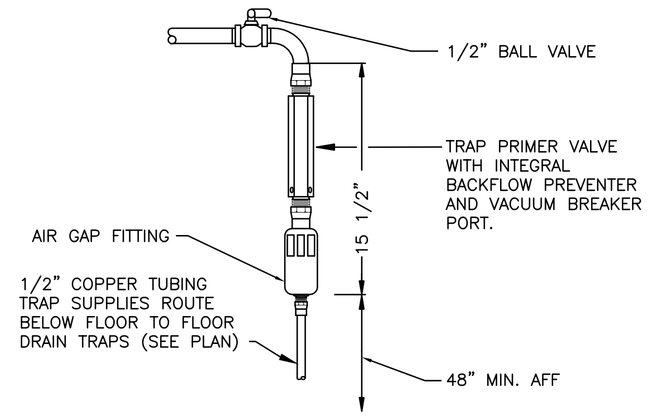

2 P603 TRAP PRIMER DETAIL

NO SCALE

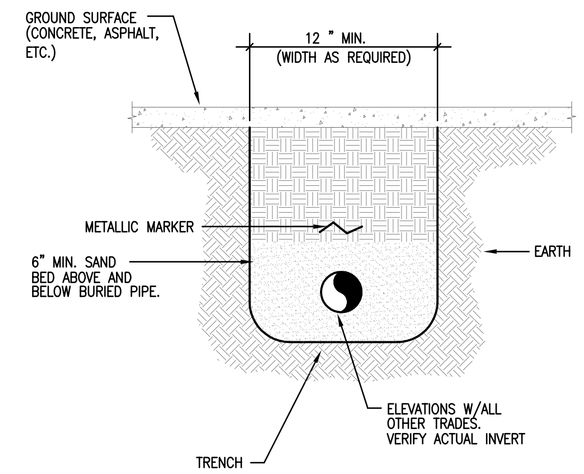

3 P603 BURIED PIPE DETAIL

NO SCALE

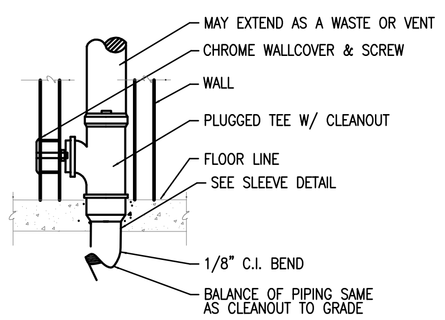

4 P603 WALL CLEANOUT – ALL VERTICAL PIPE

NO SCALE

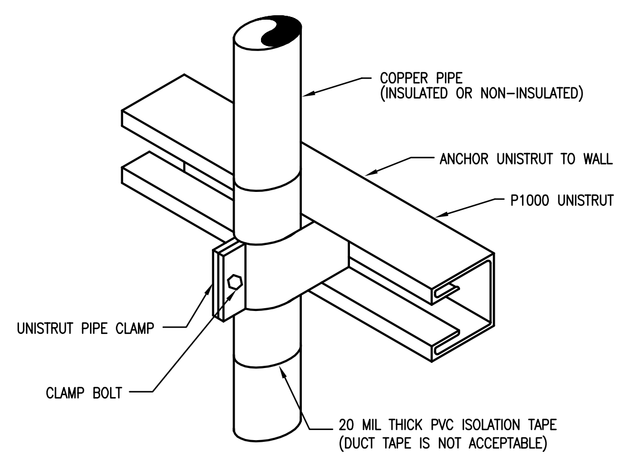

5 P603 PIPE SUPPORT DETAIL

NO SCALE

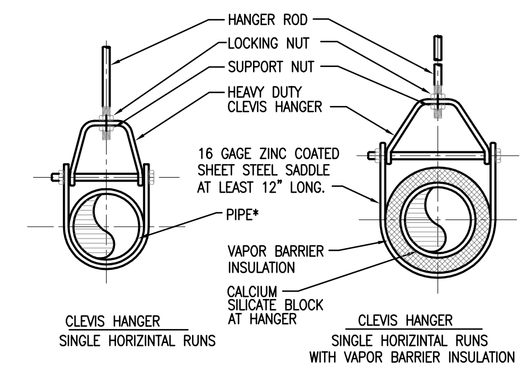

NOTE:

*INSTALL 20 MIL THICK PVC ISOLATION TAPE BETWEEN PIPE AND HANGER FOR DISSIMILAR MATERIAL. WRAP TAPE AROUND PIPE (DUCT TAPE OR ELECTRICIAN TAPE IS NOT ACCEPTABLE)

*PLUMBER'S TAPE IS NOT AN ACCEPTABLE METHOD TO HANG PIPE.

6 P603 PIPE HANGERS DETAIL

NO SCALE

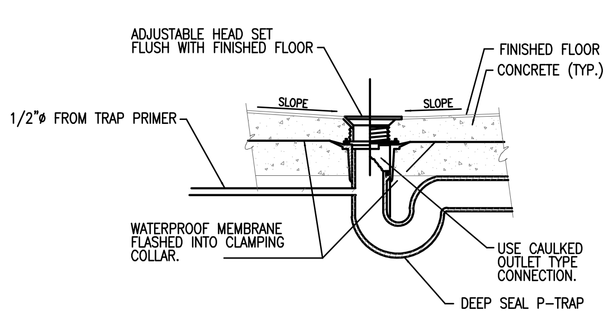

7 P603 FLOOR DRAIN DETAIL

NO SCALE

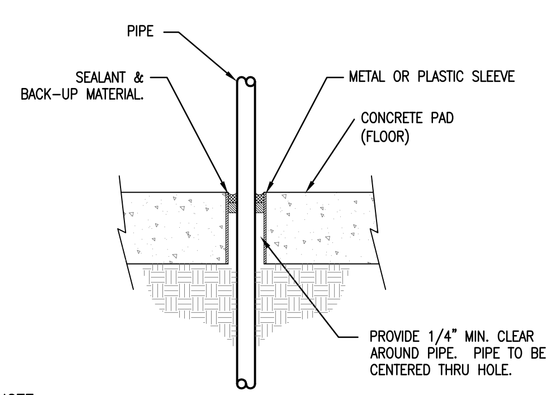

NOTE:

ALL PIPES TO BE SLEEVED. THIS INCLUDES WATER, SEWER ETC.

8 P603 PIPING THRU ON GRADE FLOOR

NO SCALE

File name: M:\PROJECTS\2005\05153.00\DRAWINGS\P603.DWG Last edited: 12/12/2005 @ 10:08

CLIENT

BRIGHAM CITY
MAINTENANCE FACILITY
STATION #1423
1325 EAST HIGHWAY 90
BRIGHAM CITY, UTAH 84302

DESIGNER

ARCHIPLEX GROUP
architecture • planning • design services
1135 South West Temple, Ste. A
Salt Lake City, UT 84101
P:(801) 961-7070
F:(801) 961-7373

CONSULTANTS

PVE Inc.
Consulting Mechanical Engineers
90 South 400 West, Suite 340
Salt Lake City UT, 84101
Phone: (801) 359-3158
Fax: (801) 521-4114

PROFESSIONAL SEAL

REGISTERED PROFESSIONAL ENGINEER
ALAN D. SPENDLOVE
166911
STATE OF UTAH

NOT VALID UNLESS SIGNED

ISSUE

MARK	DATE	DESCRIPTION
	2/15/06	CONSTRUCTION DOCUMENTS
	1/18/06	FINAL REVIEW SET
	12/21/05	DD REVIEW SET
	9/16/05	PRELIMINARY REVIEW SET

DFCM PROJECT NO:	05059900
ARCHIPLEX PROJECT NO:	050013.01
PVE PROJECT NO:	05153.00
DRAWN BY:	M.M.
CHECKED BY:	A.D.S.
DATE:	FEBRUARY 15, 2006

KEY PLAN

SHEET TITLE

PLUMBING DETAIL SHEET

P603

Copyright (C) 2005 by PVE, Inc. Salt Lake City, Utah. All rights reserved. Unauthorized copying and/or use is illegal and subject to prosecution.

ELECTRICAL SPECIFICATIONS

SECTION 16000 - GENERAL PROVISIONS

WORK CONSISTS OF FURNISHING LABOR, MATERIALS, EQUIPMENT AND SERVICES REQUIRED FOR THE COMPLETE INSTALLATION OF ELECTRICAL WORK SHOWN IN THE CONTRACT DOCUMENTS AND SPECIFIED IN DIVISION 16.

INCLUDE ALL PARTS AND LABOR WHICH ARE INCIDENTAL AND NECESSARY FOR A COMPLETE AND OPERABLE INSTALLATION EVEN THOUGH NOT SPECIFICALLY MENTIONED IN THE CONTRACT DOCUMENTS. SUCH ITEMS INCLUDE NUTS, BOLTS, ANCHORS, BRACKETS, SLEEVES, OFFSETS IN CONDUIT, FITTINGS, RELAYS, ETC.

OBTAIN ALL TEMPORARY AND PERMANENT PERMITS AND LICENSES REQUIRED IN CONNECTION WITH THIS DIVISIONS WORK. PAY ALL FEES AND EXPENSES REQUIRED FOR SUCH PERMITS AND LICENSES.

REQUEST INSPECTIONS AS REQUIRED BY REGULATING AGENCIES AND/OR REGULATIONS. PAY ALL CHARGES FOR INSPECTIONS BY REGULATING AGENCIES OF INSTALLATIONS OF PLANS AND SPECIFICATIONS.

INCLUDE STATE AND LOCAL SALES TAXES IN THE BID. KEEP ACCURATE RECORDS OF THESE TAXES AND FURNISH SUCH RECORDS TO THE OWNER UPON REQUEST.

MEET OR EXCEED ALL CURRENT APPLICABLE CODES, ORDINANCES AND REGULATIONS FOR ALL INSTALLATIONS. PROMPTLY NOTIFY THE ENGINEER, IN WRITING, IF THE CONTRACT DOCUMENTS APPEAR TO CONFLICT WITH GOVERNING CODES AND REGULATIONS. CONTRACTOR ASSUMES ALL RESPONSIBILITY AND COSTS FOR CORRECTING NON-COMPLYING WORK INSTALLED WITHOUT NOTIFYING THE ENGINEER.

HIGHER QUALITY OF WORKMANSHIP AND MATERIALS INDICATED IN THE CONTRACT DOCUMENTS TAKES PRECEDENCE OVER THAT ALLOWED IN REFERENCED CODES AND STANDARDS.

THE TERMS DEFINED BELOW APPLY TO ALL WORK INCLUDED IN DIVISION 16.

a. THE WORK - AS DEFINED IN THE 1997 AIA DOCUMENT A201: "THE TERM 'WORK' MEANS THE CONSTRUCTION AND SERVICES REQUIRED BY THE CONTRACT DOCUMENTS WHETHER COMPLETED OR PARTIALLY COMPLETED, AND INCLUDES ALL OTHER LABOR, MATERIALS, EQUIPMENT AND SERVICES PROVIDED OR TO BE PROVIDED BY THE CONTRACTOR TO FULFILL THE CONTRACTORS OBLIGATIONS. THE WORK MAY CONSTITUTE THE WHOLE OR A PART OF THE PROJECT".

b. FURNISH - TO OBTAIN IN NEW CONDITION READY FOR INSTALLATION INTO THE WORK.

c. INSTALL - TO STORE, SET IN PLACE, CONNECT AND PLACE INTO OPERATION INTO THE WORK.

d. PROVIDE - TO FURNISH AND INSTALL.

e. CONNECT - TO BRING SERVICE TO THE EQUIPMENT AND MAKE FINAL ATTACHMENT INCLUDING NECESSARY SWITCHES, OUTLETS, BOXES, TERMINATIONS, ETC.

f. CONDUIT - INCLUDES IN ADDITION TO CONDUIT, ALL FITTINGS, PULL BOXES, HANGERS AND OTHER SUPPORTS AND ACCESSORIES RELATED TO SUCH CONDUIT.

h. CONCEALED - HIDDEN FROM SIGHT IN CHASES, FURRED SPACES, SHAFTS, HUNG CEILINGS, EMBEDDED IN CONSTRUCTION, IN CRAWL SPACES OR BURIED.

g. EXPOSED - NOT INSTALLED UNDERGROUND NOR CONCEALED AS DEFINED ABOVE.

THE DRAWINGS AND SPECIFICATIONS CONSTITUTE THE CONTRACT DOCUMENTS. ANY ITEM NOTED IN THE SPECIFICATION OR SHOWN ON THE DRAWINGS IS INCLUDED IN THE CONTRACT DOCUMENTS.

ALL ELECTRICAL DETAILS AND DRAWINGS ARE DIAGRAMMATIC, UNLESS SPECIFICALLY NOTED. FIELD VERIFY ALL DIMENSIONS AND NOTIFY THE ENGINEER OF ANY CONFLICTS OR DISCREPANCIES, IN WRITING, PRIOR TO INSTALLATION.

INITIATE, MAINTAIN AND SUPERVISE ALL SAFETY PRECAUTIONS REQUIRED WITH THIS WORK IN ACCORDANCE WITH THE REGULATIONS OF THE OCCUPATIONAL SAFETY AND HEALTH ADMINISTRATION (OSHA) AND OTHER GOVERNING AGENCIES.

DO NOT REMOVE OR DISTURB ANY ASBESTOS CONTAINING MATERIALS FROM THE PROJECT. IMMEDIATELY STOP WORK AND NOTIFY THE TENANT IF ASBESTOS CONTAINING MATERIALS ARE SUSPECTED.

BEFORE SUBMITTING A PROPOSAL ON THE WORK CONTEMPLATED, EXAMINE THE SITE OF THE PROPOSED WORK AND BECOME THOROUGHLY FAMILIAR WITH EXISTING CONDITIONS AND LIMITATIONS. NO EXTRA COMPENSATION WILL BE ALLOWED BECAUSE OF MISUNDERSTANDING AS TO THE AMOUNT OF WORK INVOLVED NOR BIDDERS LACK OF KNOWLEDGE OF EXISTING CONDITIONS WHICH COULD HAVE BEEN DISCOVERED OR REASONABLY ANTICIPATED PRIOR TO BIDDING.

CONDUITS, PIPES, DUCTS, LIGHTS, DEVICES, SPEAKERS, ETC., SHOWN ON THE DRAWINGS AS EXISTING HAVE BEEN BASED ON THE EXISTING PLANS AND MAY NOT BE INSTALLED AS ORIGINALLY SHOWN. IT IS THE CONTRACTORS RESPONSIBILITY TO VISIT THE SITE AND MAKE EXACT DETERMINATION OF THE EXISTANCE, LOCATION AND CONDITION OF SUCH FACILITIES PRIOR TO SUBMITTING A BID.

CONSULT THE DRAWINGS AND SPECIFICATIONS OF MECHANICAL AND OTHER TRADES FOR CORRELATING INFORMATION AND LAY OUT WORK SO THAT IT WILL COORDINATE WITH OTHER TRADES. VERIFY DIMENSIONS AND CONDITIONS (I.E., FINISHED CEILING HEIGHTS, FOOTING AND FOUNDATION ELEVATIONS, BEAM DEPTHS, ETC.) WITH THE ARCHITECTURAL AND STRUCTURAL DRAWINGS. NOTIFY THE ARCHITECT/ENGINEER OF ANY CONFLICTS THAT CANNOT BE RESOLVED, IN THE FIELD, BY AFFECTED TRADES. REPLACEMENT OF WORK DUE TO LACK OF COORDINATION AND FAILURE TO VERIFY EXISTING CONDITIONS WILL BE COMPLETED AT NO COST TO THE OWNER.

INSTALL ALL CONDUIT, CABLE TRAY, BUSDUCT, EQUIPMENT, ETC. ALLOWING PROPER CODE AND MAINTENANCE CLEARANCES AND TO AVOID BLOCKING PASSAGEWAYS AND ACCESS PANELS.

WHERE WORK MUST BE REPLACED DUE TO FAILURE OF THE CONTRACTOR TO VERIFY THE CONDITIONS EXISTING ON THE JOB, SUCH REPLACEMENT MUST BE ACCOMPLISHED AT NO COST TO THE OWNER. THIS APPLIES TO SHOP FABRICATED WORK AS WELL AS TO WORK FABRICATED INPLACE.

THROUGHOUT THE COURSE OF THE WORK, MINOR CHANGES AND ADJUSTMENTS TO THE INSTALLATION MAY BE REQUESTED BY THE ENGINEER. THE CONTRACTOR SHALL MAKE ADJUSTMENTS WITHOUT ADDITIONAL COST TO THE OWNER WHERE SUCH ADJUSTMENTS ARE NECESSARY TO THE PROPER INSTALLATION AND OPERATION WITHIN THE INTENT OF THE CONTRACT DOCUMENTS. THIS DOES NOT INCLUDE WORK ALREADY COMPLETED.

OBTAIN EXACT LOCATION OF CONNECTION TO EQUIPMENT, FURNISHED BY OTHERS, FROM THE PERSON FURNISHING THE EQUIPMENT.

DRAWINGS AND SPECIFICATIONS ARE COMPLEMENTARY AND WHAT IS CALLED FOR IN EITHER ONE IS AS BINDING AS IF CALLED FOR IN BOTH.

INCLUDE THE BETTER QUALITY, GREATER QUANTITY OR HIGHER COST FOR AN ITEM OR ARRANGEMENT WHERE A DISAGREEMENT EXISTS IN THE DRAWINGS AND SPECIFICATIONS.

GUARANTEE AND MAINTAIN THE STABILITY OF WORK AND MATERIALS AND KEEP SAME IN PERFECT REPAIR AND CONDITION FOR THE PERIOD OF ONE (1) YEAR AFTER THE FINAL COMPLETION OF THE WORK AS EVIDENCED BY ISSUANCE OF THE FINAL CERTIFICATE BY THE OWNER.

DEFECTS OF ANY KIND DUE TO FAULTY WORK OR MATERIALS APPEARING DURING THE ABOVE MENTIONED PERIOD MUST BE IMMEDIATELY MADE GOOD BY THE CONTRACTOR AT HIS OWN EXPENSE TO THE ENTIRE SATISFACTION OF THE OWNER. INCLUDE DAMAGE TO THE FINISH OR THE BUILDING RESULTING FROM THE ORIGINAL DEFECT OR REPAIRS.

REPLACE ALL RECEPTACLES, SWITCHES, COVERPLATES, ETC. DAMAGED BY ANY CONTRACTOR DURING THE COURSE OF CONSTRUCTION.

MATERIALS FURNISHED FOR THE TEMPORARY LIGHT AND POWER SYSTEM REMAIN CONTRACTORS PROPERTY. REMOVE WHEN THERE IS NO LONGER ANY NEED FOR TEMPORARY LIGHT AND POWER.

COORDINATE/SCHEDULE ALL WORK WITH THE OWNER TO MINIMIZE ANY DISRUPTIONS. CONFINE ALL INTERRUPTIONS TO THE SMALLEST POSSIBLE AREA. PROVIDE TEMPORARY CONNECTIONS IF REQUIRED TO PROVIDE CONTINUITY OF SERVICE.

INSPECT ALL AREAS AFFECTED BY THE INTERRUPTIONS AND RETURN ALL AUTOMATICALLY CONTROLLED EQUIPMENT, ELECTRICALLY OPERATED EQUIPMENT TO THE SAME OPERATING CONDITION PRIOR TO THE INTERRUPTION.

DO NOT DISTURB NORMAL USE OF THE FACILITY, EXCEPT WITHIN THE IMMEDIATE CONSTRUCTION AREA. KEEP WALKS, DRIVEWAYS, ENTRANCES, ETC. FREE AND CLEAR OF EQUIPMENT, MATERIAL AND DEBRIS.

STORE ALL EQUIPMENT AND MATERIAL IN A PLACE AND MANNER THAT MINIMIZES CONGESTION AND IS APPROVED BY THE OWNER.

PROVIDE NEW MATERIAL AND EQUIPMENT, UNLESS NOTED OTHERWISE. PROTECT EQUIPMENT AND MATERIAL FROM DAMAGE, DIRT AND THE WEATHER.

PROVIDE THE HIGHEST QUALITY WORKMANSHIP AND PERFORM ALL WORK ONLY BY SKILLED MECHANICS. INSTALL MATERIAL AND EQUIPMENT IN ACCORDANCE WITH MANUFACTURERS RECOMMENDATIONS, INSTRUCTIONS AND CURRENT NECA STANDARDS.

THE OWNER RESERVES THE RIGHT TO REJECT MATERIAL OR WORKMANSHIP NOT IN ACCORDANCE WITH THE SPECIFICATIONS, BEFORE OR AFTER INSTALLATION.

PERFORM ALL CUTTING AND PATCHING NECESSARY TO WORK UNLESS SPECIFICALLY DELEGATED TO THE GENERAL CONTRACTOR. OBTAIN SPECIAL PERMISSION FROM THE LANDLORD BEFORE CUTTING STRUCTURAL MEMBERS OR FINISHED MATERIAL. PERFORM ALL PATCHING IN SUCH A MANNER AS TO LEAVE NO VISIBLE TRACE AND RETURN THE AREA AFFECTED TO THE CONDITION OF UNDISTURBED WORK. PERFORM ALL PATCHING BY WORKERS EXPERIENCED, SKILLED, AND LICENSED FOR THE PARTICULAR TYPE OF WORK INVOLVED. INFERIOR WORK WILL NOT BE ACCEPTED.

PATCH ALL HOLES LEFT AS A RESULT OF DEMOLITION OF ELECTRICAL EQUIPMENT AND DEVICES.

PREVENT THE SPREAD OF DUST, DEBRIS, AND OTHER MATERIAL INTO ADJACENT AREAS.

REFINISH ALL ELECTRICAL EQUIPMENT DAMAGED DURING SHIPPING AND/OR INSTALLATION TO ITS ORIGINAL CONDITION. REMOVE ALL RUST; PRIME, AND PAINT PER MANUFACTURERS RECOMMENDATIONS FOR FINISH EQUAL TO ORIGINAL.

AFTER TESTS HAVE BEEN MADE AND ACCEPTED, CLEAN LIGHT FIXTURES, PANELS AND OTHER EQUIPMENT INSTALLED BY THE CONTRACTOR, LEAVING THE ENTIRE WORK AREA IN A CLEAN AND COMPLETE WORKING ORDER.

OPERATE EQUIPMENT AND SYSTEMS IN ALL THEIR OPERATING MODES, TO VERIFY PROPER OPERATION, PRIOR TO FINAL INSPECTION AND OWNER INSTRUCTIONS. NOTIFY THE ENGINEER, IN WRITING, THAT ALL SYSTEMS HAVE BEEN TESTED AND ARE FUNCTIONING AND OPERATING PROPERLY.

CONTRACTOR IS RESPONSIBLE FOR ANY DAMAGE TO ELECTRICAL EQUIPMENT OR MATERIALS UNTIL FINAL ACCEPTANCE OF THE ENTIRE PROJECT BY THE OWNER.

PROVIDE TEMPORARY WIRING AND CONNECTIONS TO MAINTAIN EXISTING SYSTEMS, INCLUDING TELEPHONE AND DATA SYSTEMS, IN SERVICE DURING CONSTRUCTION. WHEN WORK MUST BE PERFORMED ON ENERGIZED EQUIPMENT OR CIRCUITS, USE PERSONNEL EXPERIENCED IN SUCH OPERATIONS.

EXISTING ELECTRICAL SERVICE: MAINTAIN EXISTING SYSTEM IN SERVICE DISABLE SYSTEM ONLY TO MAKE SWITCHOVERS AND CONNECTIONS. NOTIFY AND OBTAIN PERMISSION FROM OWNER/ENGINEER AT LEAST 24 HOURS BEFORE PARTIALLY OR DISABLING SYSTEM. MINIMIZE OUTAGE DURATION. MAKE TEMPORARY CONNECTIONS TO MAINTAIN SERVICE IN AREAS ADJACENT TO WORK AREA.

EXISTING TELEPHONE, DATA, CCTV & SECURITY SYSTEM MAINTAIN EXISTING SYSTEMS IN SERVICE.

DEMOLISH AND EXTEND EXISTING ELECTRICAL WORK UNDER AND THIS SECTION, AND AS INDICATED ON THE DRAWINGS. REMOVE, RELOCATE, AND EXTEND EXISTING INSTALLATIONS TO ACCOMODATE NEW CONSTRUCTION.

PROVIDE SUPPORTS FOR ALL EXISTING ELECTRICAL EQUIPMENT THAT WAS SUPPORTED PREVIOUSLY BY DEMOLISHED WALLS, FLOORS, CEILING OR OTHER STRUCTURES. PROVIDE NEW SUPPORTS FROM STRUCTURAL MEMBERS NOT SLATED FOR DEMOLITION, PRIOR TO ANY DEMOLITION.

OWNER RESERVES THE RIGHT OF FIRST REFUSAL TO OBTAIN MATERIAL SHOWN TO BE REMOVED UNDER THIS CONTRACT. ITEMS NOT RETAINED BY THE OWNER BECOME THE PROPERTY OF THE CONTRACTOR AND MUST BE REMOVED FROM THE PREMISES.

EXTEND EXISTING INSTALLATIONS USING MATERIALS AND METHODS COMPATIBLE WITH EXISTING ELECTRICAL INSTALLATIONS, OR AS SPECIFIED. RELOCATE AND REROUTE CONDUIT AND WIRING AS REQUIRED FOR CONDUIT CONCEALED IN WALLS OR STRUCTURE BEING ALTERED AS PART OF THE REMODELING. MAINTAIN CONTINUITY TO ALL DEVICES IN AND DOWNSTREAM OF REMODELED WORK.

REROUTE EXISTING RACEWAY AND WIRING, WHICH IS EXPOSED DUE TO REMOVAL OF EXISTING CONSTRUCTION. CONCEAL NEW RACEWAY AND WIRING AND MAINTAIN OPERATION.

SECTION 16050 - BASIC MATERIALS AND METHODS

ENCASE ALL CONDUCTORS IN A CONTINUOUS RACEWAY SYSTEM. PROVIDE PULL AND JUNCTION BOXES AS REQUIRED BY THE NEC. SIZE ALL RACEWAY PER THE NEC WITH OVERSIZED CONDUITS AS INDICATED.

PROVIDE JUNCTION BOXES OR GUTTER AT BRANCH PANEL AND ROUTE EMT CONDUIT INTO PANELBOARD.

PROVIDE EXPANSION FITTINGS WHERE RACEWAY CROSSES BUILDING EXPANSION JOINTS.

RUN ALL EXPOSED CONDUIT IN A NEAT, WORKMANLIKE MANNER PARALLEL TO THE BUILDING LINES, TIGHT TO THE WALL AND CEILING SURFACES, AND FIRMLY SUPPORT WITH CONDUIT CLAMPS OR HANGERS. PROVIDE TWO (2) HOLE MOUNTING STRAPS, MINIMUM THREE (3) FEET ON CENTER, FOR ALL SURFACE CONDUIT MOUNTED ON WALLS LESS THAN SIX (6) FEET ABOVE FINISHED FLOOR. PLACE CONDUITS AT LEAST 6" AWAY FROM ALL HOT PIPING AND SURFACES INCLUDING DOMESTIC HOT WATER LINES.

PROVIDE GALVANIZED CODE GUAGE STEEL JUNCTION AND PULL BOXES WITH SCREW ON COVERS OF TYPE, SHAPE AND SIZE REQUIRED TO SUIT EACH INSTALLATION. PROVIDE GASKETING IN DAMP AND DUSTY LOCATIONS. PROVIDE CAST BOXES IN WEATHERPROOF, VAPOR TIGHT AND EXPLOSION PROOF ENVIROMENTS.

PROVIDE 4" BOXES THROUGHOUT. PROVIDE 3-1/2" DEEP BOXES WHERE INSTALLED IN MASONRY, 2-1/2" MINIMUM ELSEWHERE. VAPOR TIGHT GANG MUD OR TILE RING FOR SINGLE DEVICES.

COORDINATE THE LOCATION OF ALL OUTLETS WITH MECHANICAL DRAWINGS BEFORE INSTALLATION.

PROVIDE WIRE AND CABLE WITH INSULATION VOLTAGE RATING EQUAL TO OR GREATER THAN THE APPLIED SYSTEM VOLTAGE. PROVIDE SOLID OR STRANDED COPPER CONDUCTORS WITH TYPE THWN, THHN, OR XHHN INSULATION FOR NO. 12 AWG AND NO. 10 AWG CONDUCTORS. PROVIDE MINIMUM NO. 12 AWG CONDUCTOR SIZE, UNLESS NOTED OTHERWISE. USE THE MINIMUM CONDUCTOR SIZE WHEN NO SIZE IS INDICATED. ALL CONDUCTORS TO BE COLOR-CODED.

SECTION 16501 - BUILDING LIGHTING

PROVIDE LIGHTING FIXTURES AS SCHEDULED C/W HOUSING LAMPS, LAMP HOLDERS, REFLECTORS, BALLASTS & WIRING.

FLUORESCENT LAMP BALLAST FOR T8 & T5 LAMPS SHALL BE ELECTRONIC CBM CERTIFIED W/ THD LESS THAN 20% RAPID START.

SUPPORT ALL RECESSED LIGHTING FIXTURES W/ 4 # 12GA. WIRES INDEPENDENT FROM CEILING SUPPORT SYSTEM.

PANELBOARD SCHEDULE

PANEL 'A' — 120/208 VOLTS — 3 PH — 4 W
MOUNTING: FLUSH / XX SURFACE
RATING: 10,000 SERVICE RATED — AMP 225 – MLO — LOCATION: MEZZ. 201 — PROJECT: BRIGHAM M.S.

BRANCH BREAKERS

ITEM	AMPS	POLE	WIRE SIZE	CIR. NO.	LEFT PHASE LOAD A	LEFT PHASE LOAD B	LEFT PHASE LOAD C	RIGHT PHASE LOAD A	RIGHT PHASE LOAD B	RIGHT PHASE LOAD C	CIR. NO.	AMPS	POLE	WIRE SIZE	ITEM
LIGHTING	20	1	12	1	1100			1000			2	20	1	12	RECEPTACLES
				3		1000			600		4				
				5			1300			600	6				
				7	1500			600			8				
OUTDOOR LIGHTING				9		1100			400		10				
				11			1100			1000	12				
				13	1800			1000			14				
				15		1800			600		16				
O.H. DOORS				17			1000			600	18				
				19	1000			400			20				
				21		1000			700		22				BURNERS
				23			1000			1500	24	25	1	10	VACUUM PUMP
				25	1000			1500			26	25	1	10	VACUUM PUMP
				27		1000					28	20	1		SPARE
				29			1000				30				
				31	1000						32				
				33		1000					34				
SPARE				35							36				
				37							38				
				39							40				
				41							42				
					7400	6900	5400	4500	2300	3700					
TOTAL					11900	9200	9100								

LOAD TOTAL 30,200
FLA 84

PANELBOARD SCHEDULE

PANEL 'M' — 120/208 VOLTS — 3 PH — 4 W
MOUNTING: FLUSH / XX SURFACE
RATING: 22,000 SERVICE RATED — AMP 300 – MB — LOCATION: MEZZ. 201 — PROJECT: BRIGHAM M.S.

BRANCH BREAKERS

ITEM	AMPS	POLE	WIRE SIZE	CIR. NO.	LEFT PHASE LOAD A	LEFT PHASE LOAD B	LEFT PHASE LOAD C	RIGHT PHASE LOAD A	RIGHT PHASE LOAD B	RIGHT PHASE LOAD C	CIR. NO.	AMPS	POLE	WIRE SIZE	ITEM
COMPRESSOR	50	3	6	1	2900			12100			2	125	3	1/0	PANEL 'A'
7-1/2 HP-VERIFY	–	–	–	3		2900			9200		4	–	–	–	–
	–	–	–	5			2900			9900	6	–	–	–	–
STORAGE PUMP	60	2	3	7	3000			2400			8	40	2	8	COND. UNIT
–	–	–	–	9		3000			2400		10	–	–	–	–
SPARE	20	1		11			–			–	12	20	1		SPARE
FURNACE	25	1	10	13	1500			900			14	20	3	12	EXH. FAN
SPECIAL OUTLET	30	2	10	15		2400			900		16	–	–	–	EF-2 2HP
–	–	–	–	17			2400			900	18	–	–	–	–
SPECIAL OUTLET	30	2	10	19	2400			2900			20	50	3	6	MOBILE LIFT
–	–	–	–	21		2400			2900		22	–	–	–	–
FUEL EQ.	30	2	12	23			1500			2900	24	–	–	–	–
–	–	–	–	25	1500			2900			26	50	3	6	HOIST
FUEL EQ.	20	2	12	27		1500			2900		28	–	–	–	7-1/2HP
–	–	–	–	29			1500			2900	30	–	–	–	–
FUEL EQ.	20	2	12	31	1000						32	50	3	–	SPARE
–	–	–	–	33		1000					34	–	–	–	–
WASH RACK PUMP	30	2	10	35			1200				36	–	–	–	–
–	–	–	–	37	1200			1000			38	20	2	12	SEWER PUMP
SPARE	20	1		39					1000		40	–	–	–	–
SPARE	20	1		41						1000	42	20	1	12	HEAT TAPE GFI
					13500	13200	9500	19300	19300	17600					
TOTAL					32800	32500	27100								

LOAD TOTAL 92,400
FLA 257

INDEX OF ELECTRICAL DRAWINGS

E001 ELECTRICAL SYMBOLS & NOTES
E100 ELECTRICAL SITE PLAN
E201 LIGHTING PLAN
E301 POWER PLAN

LIGHTING FIXTURE SCHEDULE

FIXTURE TYPE	MANUFACTURE	CATALOG NUMBER	DESCRIPTION	LAMPS	QTY	FIX WATTS	MTG	VOLTS
A	METALUX	STDIM232-120V	8' 4-LAMP INDUSTRIAL FLUORESCENT FIXTURE	F32T8 SP35	4	110	PEND.	120
B	METALUX	2FC8-332A-120V EB81	RECESSED FLANGED 2'X4' 3-LAMP FLUORESCENT FIXTURE	F32T8 SP35	3	98	REC.	120
C	METALUX	WB232A-120V EB81	SURFACE MOUNTED FLUORESCENT WRAP AROUND FIXTURE	F32T8 SP35	2	68	SURF.	120
EL	SURELITES	CC7NCSD-SM	EMERGENCY BATTERY PACK	C/W UNIT	2	32	SURF.	120
X1	SURELITES	LPX70DG-WH	LED EXIT SIGN	LED	-	32	UNIV.	120
OA	LUMARK	MHWL250-120V	OUTDOOR 250W METAL HALIDE WALLPACK	250W MH	1	275	SURF.	120
OB	McGRAW EDISON	AMF-Y-400MH-MT-76-BK	OUTDOOR 400W METAL HALIDE FLOOD LIGHT	400W MH	1	460	SURF.	120

GENERAL NOTES

1. DO NOT SCALE DRAWINGS VERIFY DIMENSIONS IN FIELD PRIOR TO MAKING ANY ROUGH-INS.
2. FINAL CONNECTIONS TO EQUIPMENT SHALL BE MADE AS PER MANUFACTURERS WRITTEN INSTRUCTIONS AND APPROVED WIRING DIAGRAMS AND DETAILS. IT SHALL BE THE CONTRACTORS RESPONSIBILITY TO PROVIDE ALL MATERIALS AND EQUIPMENT COMPATIBLE WITH EQUIPMENT ACTUALLY SUPPLIED.
3. CONSULT ARCHITECTS REFLECTED CEILING PLANS FOR EXACT LOCATIONS OF LIGHTING FIXTURES, SPEAKERS, SMOKE DETECTORS ETC.
4. ELECTRICAL CONTRACTOR SHALL MEET WITH THE CEILING AND MECHANICAL CONTRACTORS TO COORDINATE LOCATIONS, CLEARANCES, CEILING TYPES AND ROUGH-IN REQUIREMENTS OF ALL LIGHTING FIXTURES PRIOR TO DUCT, PIPING AND CEILING INSTALLATIONS.
5. ALL EMPTY RACEWAY SYSTEMS SHALL HAVE A 200LB RATED PULL CORD INSTALLED AND SHALL BE IDENTIFIED AT EACH JUNCTION, PULL AND TERMINATION POINT, USING PERMANANT MARKER IN THE BOX. ID SHALL INDICATE INTENDED USE OF CONDUIT, ORIGINATION AND TERMINATION POINTS OF EACH INDIVIDUAL CONDUIT.
6. ALL PENETRATIONS OF FIRE RATED FLOORS, CEILING AND WALLS SHALL BE SEALED WITH APPROVED AND RATED FIRE STOP MATERIAL TO MAINTAIN FIRE RATING OF ASSEMBLY.
7. ELECTRICAL BOXES SHALL NOT BE LOCATED IN MASONRY OR CONCRETE COLUMNS, BOND BEAMS OR GROUTED CELLS OF MASONRY WALLS ADJACENT TO OPENINGS WITHOUT COORDINATION WITH THE MASONRY CONTRACTOR.
8. IT IS THE INTENT OF THESE DRAWINGS AND SPECIFICATIONS TO ESTABLISH A A STANDARD OF QUALITY. THE ENGINEER RESERVES THE RIGHT TO VERBALLY APPROVE METHODS AND MATERIALS NOT REFLECTED HEREIN.
9. CONTRACTOR SHALL REVIEW ARCHITECTURAL, STRUCTURAL, MECHANICAL, PLUMBING AND OTHER DRAWINGS PRIOR TO BID.
10. WORK SHALL BE PERFORMED IN A PROFESSIONAL WORKMANLIKE MANNER TO THE SATISFACTION OF THE ARCHITECT AND ENGINEER.
11. WORK, MATERIALS AND EQUIPMENT SHALL CONFORM TO THE LATEST EDITIONS OF LOCAL, STATE AND NATIONAL CODES, STANDARDS AND ORDINANCES.
12. CONTRACTOR SHALL SECURE AND PAY FOR ALL NECESSARY BUILDING PERMITS AND INSPECTION FEES.
13. THE CONTRACTOR SHALL GUARANTEE THE INSTALLATION AGAINST DEFECTS IN MATERIALS AND WORKMANSHIP, WHICH MAY OCCUR UNDER NORMAL USAGE FOR A PERIOD OF ONE YEAR AFTER SUBSTANTIAL COMPLETION. DEFECTS SHALL BE PROMPTLY CORRECTED.
14. PROVIDE RECORD DRAWINGS IN ACCORDANCE WITH THE PROJECT SPECIFICATIONS.
15. VERIFY EXACT LOCATION OF EQUIPMENT TO BE FURNISHED BY OTHERS PRIOR TO ROUGH-IN.
16. ELECTRICAL CONTRACTOR SHALL VERIFY ALL EQUIPMENT DIMENSIONS AND LOCATIONS BEFORE BEGINNING ROUGH-INS. CONSULT CONTRACT DOCUMENT DRAWINGS AND SHOP DRAWINGS TO VERIFY ALL CODE AND MAINTENANCE REQUIRED CLEARANCES ARE MAINTANED.
17. CONTRACTOR SHALL VERIFY ACTUAL ELECTRICAL LOADS OF EACH PIECE OF EQUIPMENT REQUIRING POWER. BRING ANY DESCREPANCIES TO THE ATTENTION OF THE PROJECT ENGINEER.
18. SYSTEMS SHALL BE TESTED FOR PROPER OPERATION. IF TESTS RESULT IN DEFECT OR IMPROPER OPERATION THE CONTRACTOR SHALL MAKE ANY CORRECTIONS NECESSARY AT NO ADDITIONAL COSTS TO THE OWNER.
19. WIRE SHALL BE COPPER 75° C RATED FOR GENERAL USE. FOR HID FIXTURES AND WIRING WITHIN 3" OF FLUORESCENT BALLAST SHALL BE COPPER, MINIMUM 90° C RATED. CONDUCTOR SIZES INDICATED ARE FOR INSTALLATION IN A MAXIMUM 30° C AMBIENT TEMPERATURE ENVIROMENT. CONDUCTOR AMPACITY SHALL BE DERATED FOR HIGHER AMBIENT INSTALLATIONS.
20. SPLICES IN EXTERIOR PULLBOXES AND MANHOLES SHALL BE MADE WATERPROOF USING "SCOTCAST" SPLICE KIT OR APPROVED EQUAL. SEAL ENDS OF CONDUITS AND DUCTS ENTERING BOXES WITH "DUCTSEAL" OR EQUAL.
21. SUBMIT SHOP DRAWINGS IN ACCORDANCE WITH SPECIFICATIONS BOUND IN A THREE RING BINDER, INDEXED IN A NEAT AND ORDERLY MANNER WITH TYPE AND MODEL NUMBERS INDICATED. SUBMITTALS SHALL INCLUDE BUT NOT LIMITED TO: LIGHTING FIXTURES, LAMPS, WIRING DEVICES, OCCUPANCY SENSORS, CONTACTORS, TIME CLOCKS, PHOTOCELLS, RELAYS, SWITCHBOARDS, PANELBOARDS, MOTOR CONTROL CENTERS, SAFETY SWITCHES, MOTOR STARTERS, OVERCURRENT PROTECTION DEVICES, TRANSFORMERS, CONDUCTORS OVER 600 VOLTS AND ALL SPECIAL SYSTEMS SUCH AS FIRE ALARM, LIGHTING CONTROLS, SECURITY SYSTEMS, SOUND SYSTEMS ETC.
22. VERIFY EXACT LOCATIONS OF ALL NEW AND EXISTING UNDERGROUND SITE UTILITIES, PIPING AND RACEWAY SYSTEMS PRIOR TO TRENCHING. PROVIDE NECESSARY TRENCHING, BACKFILL EXCAVATION, SUPPORTS, SERVICE FEEDERS, (CONDUIT AND/OR WIRE), PULL BOXES, TRANSFORMER PADS, SAW CUTTING AND PATCHING, CONCRETE PAVING ETC. REQUIRED. BACKFILL TRENCHES TO 90% COMPACTION AND PATCHING TO MATCH EXISTING. CONTRACTOR SHALL OBTAIN AND VERIFY EXACT UTILITY COMPANY DRAWINGS AND REQUIREMENTS FOR ALL SITE UTILITIES. ELECTRICAL CONTRACTOR SHALL ALSO COORDINATE ELECTRICAL RELATED UTILITIES WITH THE CIVIL AND MECHANICAL ENGINEERS AND CONTRACTORS.
23. PULLBOXES, CABINETS, ETC. MOUNTED ON THE EXTERIOR OF THE BUILDING AT GRADE LEVEL, SHALL BE WEATHERPROOF TYPE WITH HINGED GASKETED LOCKABLE COVERS SECURED WITH TAMPERPROOF SCREWS.

ELECTRICAL SYMBOL SCHEDULE

STANDARD MOUNTING HEIGHT UNLESS OTHERWISE NOTED ON PLANS

SYMBOL	DESCRIPTION	MOUNTING HEIGHT	NOTES
	ONE CIRCUIT, TWO WIRE HOME RUN TO PANEL		
	2 CIRCUIT, 3 WIRE, COMMON NEUTRAL HOME RUN		
	3 CIRCUIT, 4 WIRE, COMMON NEUTRAL HOME RUN		
	CONDUIT RUN CONCEALED IN WALL OR CEILING		
	CONDUIT RUN CONCEALED IN FLOOR OR GROUND		
	CONDUIT UP		
	CONDUIT DOWN		
	CONDUIT STUB LOCATION	CAP CONDUIT	
	CEILING LIGHT FIXTURE	CEILING	
	WALL LIGHT FIXTURE	AS NOTED	
	RECESSED DOWNLIGHT FIXTURE	CEILING	
	FLUORESCENT LIGHT FIXTURE	AS NOTED	
	FLUORESCENT EGRESS LIGHT FIXTURE	AS NOTED	UNSWITCHED
	CEILING MOUNTED EXIT LIGHT	CEILING	
	WALL MOUNTED EXIT LIGHT	AS NOTED	
$	SINGLE POLE SWITCH	+4'-0"	
$a	SINGLE POLE SWITCH	+4'-0"	
$3	THREE-WAY SWITCH	+4'-0"	
$4	FOUR-WAY SWITCH	+4'-0"	
$K	KEY OPERATED SWITCH	+4'-0"	
$P	SWITCH WITH PILOT LIGHT	+4'-0"	
	VARIABLE INTENSITY SWITCH	+4'-0"	
	TIMER SWITCH	+4'-0"	
	DUPLEX RECEPTACLE	+16"	
A	DUPLEX RECEPTACLE		
W	ELECTRIC WATER COOLER RECEPTACLE		
WP	WEATHERPROOF RECEPTACLE	+24"	
IG	ISOLATED GROUND RECEPTACLE	+16"	
	GROUND FAULT INTERRUPTER DUPLEX RECEPTACLE	+16"	
	DUPLEX RECEPTACLE EMERGENCY POWER (RED)	+16"	
	FOURPLEX RECEPTACLE	+16"	
E	FOURPLEX RECEPTACLE EMERGENCY POWER (RED)	+16"	
	FLOOR OUTLET WITH 20A DEVICE	FLOOR	
	SPECIAL PURPOSE OUTLET	+16" OR AS NOTED	
	DATA OUTLET	+16"	
	TELEPHONE OUTLET	+16"	
	TELEPHONE/DATA OUTLET	+16"	
	TELEPHONE OUTLET	FLOOR	
J	JUNCTION BOX ('F' IN FLOOR)	AS NOTED	
	MOTOR OUTLET	TO SUIT EQUIP.	
	NON-FUSED DISCONNECT SWITCH	+5'-0"	
F	FUSED DISCONNECT SWITCH	+5'-0"	
$T	MANUAL STARTER THERMAL OVERLOAD SWITCH WITH PILOT LIGHT	+4'-0"	
	PANEL BOARD	TOP AT +6'-0"	
	MAIN DISTRIBUTION PANEL		
	TELEPHONE TERMINAL BOARD		
C	CLOCK OUTLET	+7'-6"	8.
F	FIRE ALARM MANUAL STATION	+4'-0"	2.
H	FIRE ALARM SIGNAL SPEAKER/STROBE	+6'-8"	6.
S	SMOKE DETECTOR	CEILING	
D	DUCT SMOKE DETECTOR		MTD. IN DUCT
H	HEAT DETECTOR	CEILING	
	FIRE SMOKE DAMPER		
	SOUND SYSTEM SPEAKER	+8'-0" OR AS NOTED	
MON	MONITOR SPEAKER OUTLET	AS NOTED	
TV	TELEVISION OUTLET	+4'-0"	2.
842	ARCHITECTURAL ROOM NUMBER		
A	LIGHT FIXTURE (LETTER DESIGNATES TYPE)		
EQ 34	EQUIPMENT NUMBER		

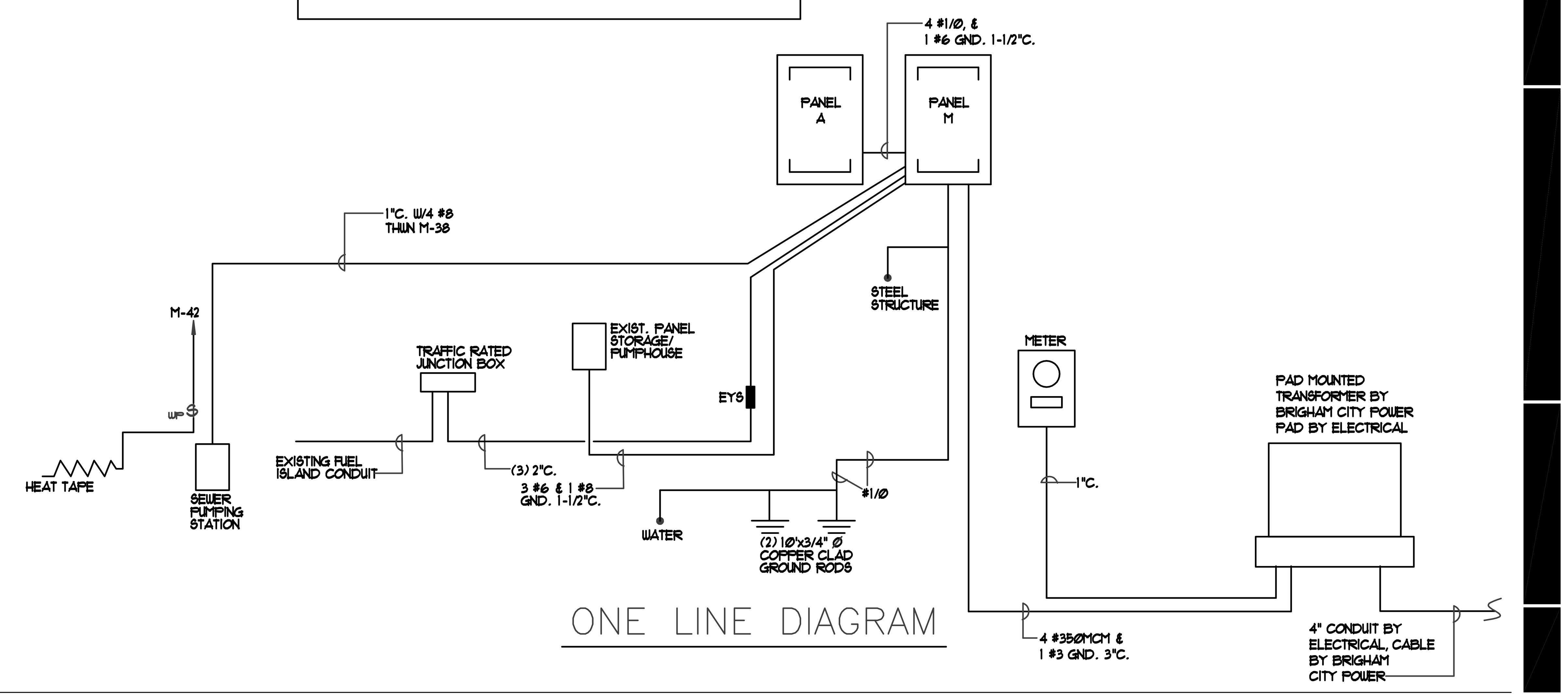

ONE LINE DIAGRAM

CLIENT

BRIGHAM CITY
MAINTENANCE FACILITY
STATION #1423
1325E. HIGHWAY 90
BRIGHAM CITY, UTAH 84302

DESIGNER

ARCHIPLEX GROUP
architecture · planning · design services
1135 South West Temple, Ste. A
Salt Lake City, UT 84101
P:(801) 961-7070
F:(801) 961-7373

CONSULTANTS

PVE Inc.
Consulting Mechanical Engineers
90 South 400 West, Suite 340
Salt Lake City UT, 84101
Phone: (801) 359-3158
Fax: (801) 521-4114

REGISTRATION

REGISTERED PROFESSIONAL ENGINEER — No. 154867 — DEAN P. LEVORSEN — STATE OF UTAH

NOT VALID UNLESS SIGNED

ISSUE

MARK	DATE	DESCRIPTION
	2-15-06	CONSTRUCTION DOCUMENTS
	1-18-06	FINAL REVIEW

DFCM PROJECT NO: 05059900/067045
ARCHIPLEX PROJECT NO: 050013.01
PVE PROJECT NO: 05153.01
DRAWN BY: K.M.
CHECKED BY: R.K.R.
DATE: OCTOBER 6, 2005

KEY PLAN

SHEET TITLE

ELECTRICAL SCHEDS & NOTES

E001

© 2004 ARCHIPLEX GROUP

Copyright (C) 2005 by PVE, Inc. Salt Lake City, Utah. All rights reserved. Unauthorized copying and/or use is illegal and subject to prosecution.

File name: M:\PROJECTS\2004\04080.02\DRAWINGS\M201.DWG Last edited: 06/16/2005 @ 10:32

KEYED NOTES:

1. 40ft. OF SELF REGULATING HEAT TAPE ON SEWER PIPE ACROSS CULVERT. INSTALL UNDER INSULATION 10WATTS PER FOOT RATED FOR UNDERGROUND INSTALLATION.
2. VERIFY EXACT PUMP POWER REQUIREMENTS PRIOR TO ROUGH-IN.

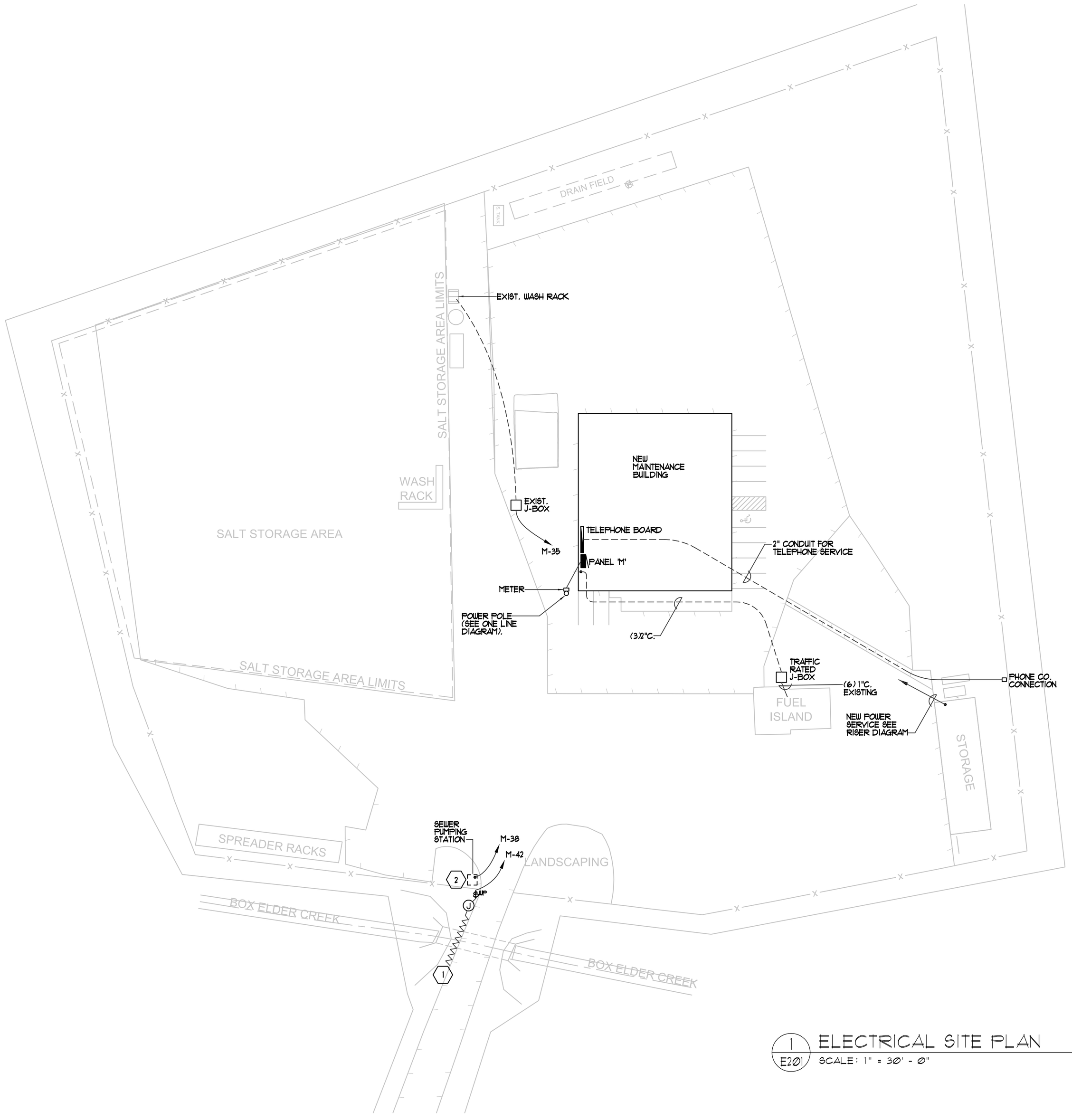

1 E201 ELECTRICAL SITE PLAN

SCALE: 1" = 30' - 0"

CLIENT

BRIGHAM CITY
MAINTENANCE FACILITY
STATION #1423
1325E. HIGHWAY 90
BRIGHAM CITY, UTAH 84302

DESIGNER

ARCHIPLEX GROUP
architecture · planning · design services
1135 South West Temple, Ste. A
Salt Lake City, UT 84101
P:(801) 961-7070
F:(801) 961-7373

CONSULTANTS

PVE Inc.
Consulting Mechanical Engineers
90 South 400 West, Suite 340
Salt Lake City UT, 84101
Phone: (801) 359-3158
Fax: (801) 521-4114

REGISTRATION

REGISTERED PROFESSIONAL ENGINEER
No. 154867
DEAN P. LEVORSEN
STATE OF UTAH

NOT VALID UNLESS SIGNED

ISSUE

MARK	DATE	DESCRIPTION
	2-15-06	CONSTRUCTION DOCUMENTS
	1-18-06	FINAL REVIEW

DFCM PROJECT NO:	05059900/067045
ARCHIPLEX PROJECT NO:	050013.01
PVE PROJECT NO:	05153.01
DRAWN BY:	K.M.
CHECKED BY:	R.K.R.
DATE:	OCTOBER 6, 2005

KEY PLAN

SHEET TITLE

ELECTRICAL SITE PLAN

E100

© 2004 ARCHIPLEX GROUP

Copyright (C) 2005 by PVE, Inc. Salt Lake City, Utah. All rights reserved. Unauthorized copying and/or use is illegal and subject to prosecution.

File name: M:\PROJECTS\KNUTE'S MISC. STUFF\ARCHIPLEX MAINTENANCE STATIONS\BRIGHAM MAINTENANCE FACILITY\DRAWINGS\M201.DWG Last edited: 09/02/05 @ 09:52

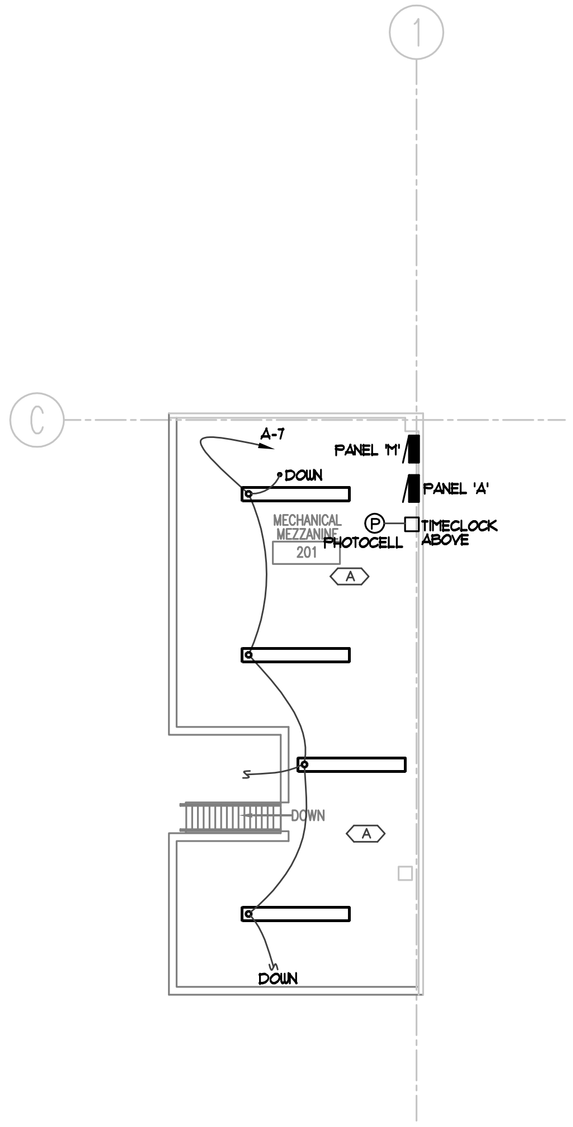

2 E201 MEZZANINE FLOOR PLAN (LTG).
SCALE: 1/8" = 1' - 0"

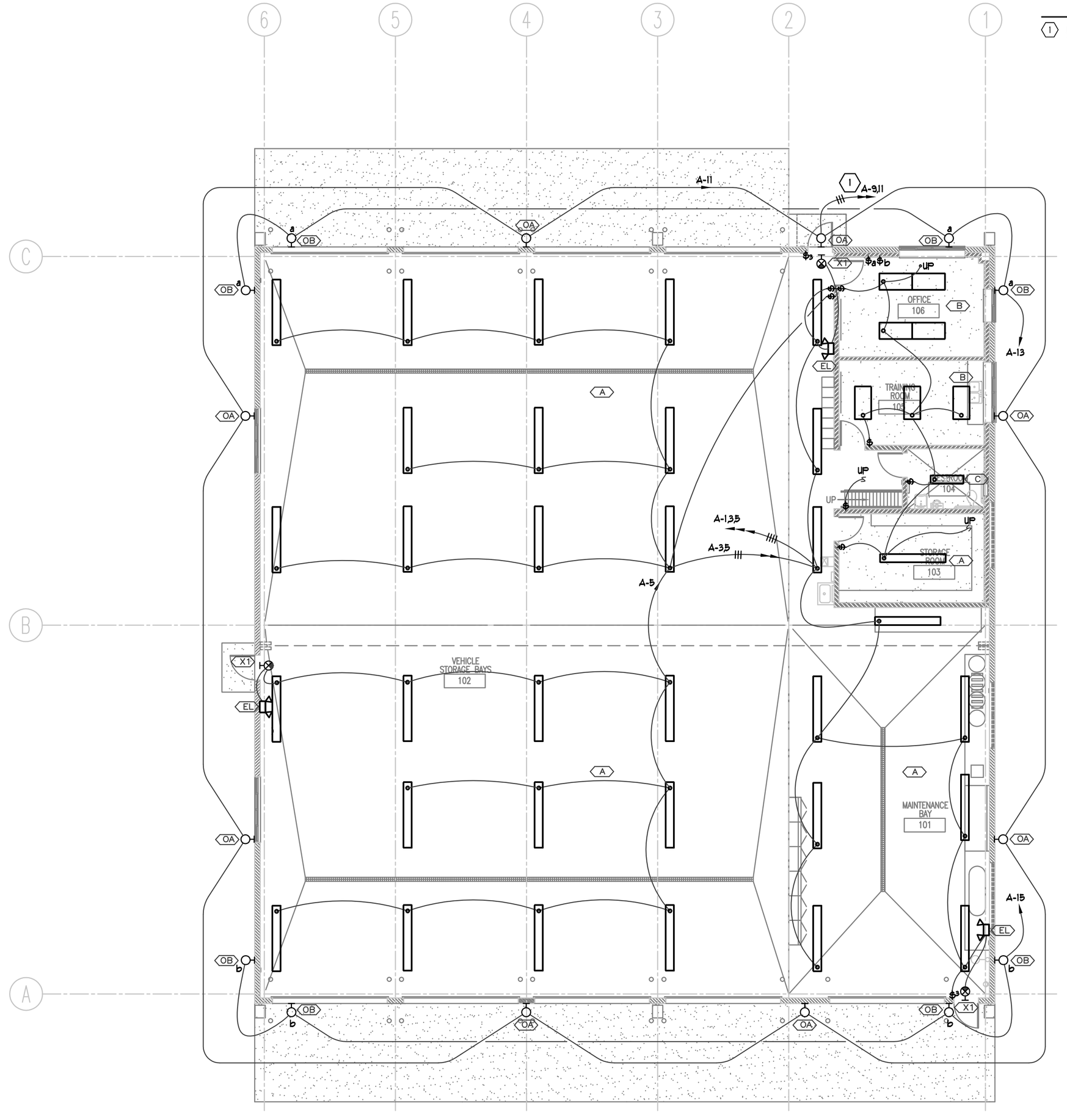

1 E201 LIGHTING FLOOR PLAN
SCALE: 1/8" = 1' - 0"

KEYED NOTES:

1. WIRE OUTDOOR LIGHTING CIRCUIT THROUGH TIME CLOCK.

CLIENT

BRIGHAM CITY
MAINTENANCE FACILITY
STATION #1423
1325E. HIGHWAY 90
BRIGHAM CITY, UTAH 84302

DESIGNER

ARCHIPLEX GROUP
architecture · planning · design services
1135 South West Temple, Ste. A
Salt Lake City, UT 84101
P:(801) 961-7070
F:(801) 961-7373

CONSULTANTS

PVE Inc.
Consulting Mechanical Engineers
90 South 400 West, Suite 340
Salt Lake City UT, 84101
Phone: (801) 359-3158
Fax: (801) 521-4114

REGISTRATION

REGISTERED PROFESSIONAL ENGINEER
No. 154867
DEAN P. LEVORSEN
STATE OF UTAH
NOT VALID UNLESS SIGNED

ISSUE

MARK	DATE	DESCRIPTION
	2-15-06	CONSTRUCTION DOCUMENTS
	1-18-06	FINAL REVIEW

DFCM PROJECT NO:	05059900/067045
ARCHIPLEX PROJECT NO:	050013.01
PVE PROJECT NO:	05153.01
DRAWN BY:	K.M.
CHECKED BY:	R.K.R.
DATE:	OCTOBER 6, 2005

KEY PLAN

SHEET TITLE

LIGHTING FLOOR PLAN

E201

© 2004 ARCHIPLEX GROUP

Copyright (C) 2005 by PVE, Inc. Salt Lake City, Utah. All rights reserved. Unauthorized copying and/or use is illegal and subject to prosecution.

File name: M:\PROJECTS\KNUTE'S MISC. STUFF\ARCHIPLEX MAINTENANCE STATIONS\BRIGHAM MAINTENANCE FACILITY\DRAWINGS\M201.DWG Last edited: 09/02/05 @ 09:52

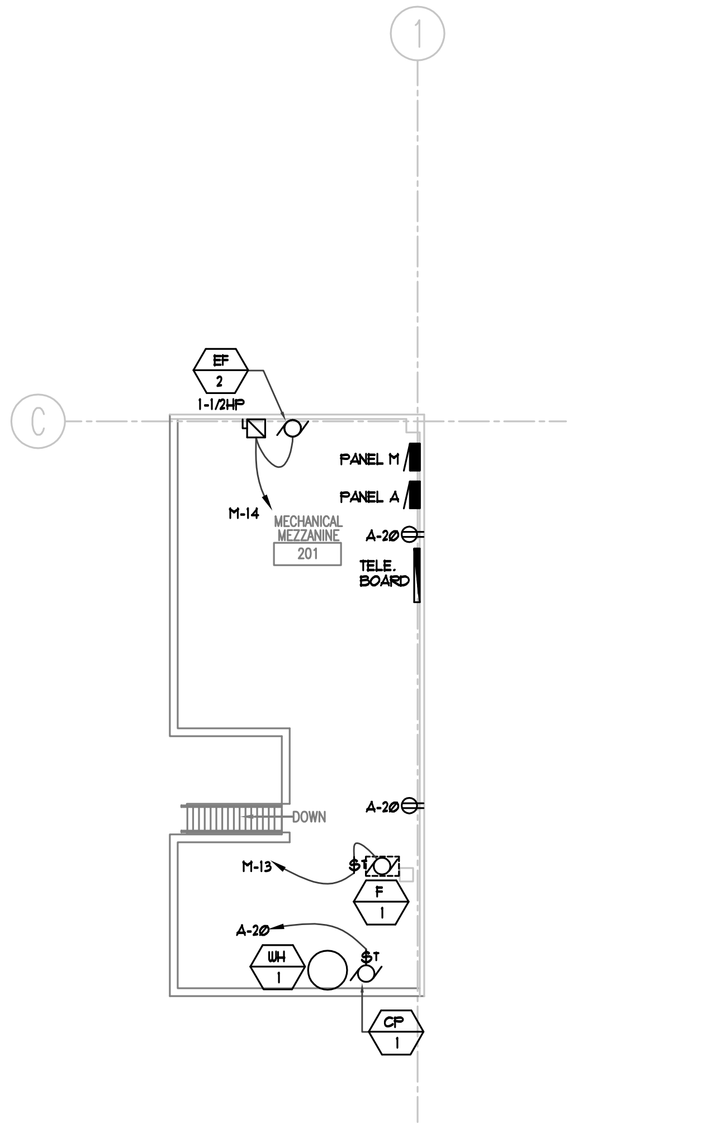

2 E301 MEZZANINE FLOOR PLAN (PWR).
SCALE: 1/8" = 1' - 0"

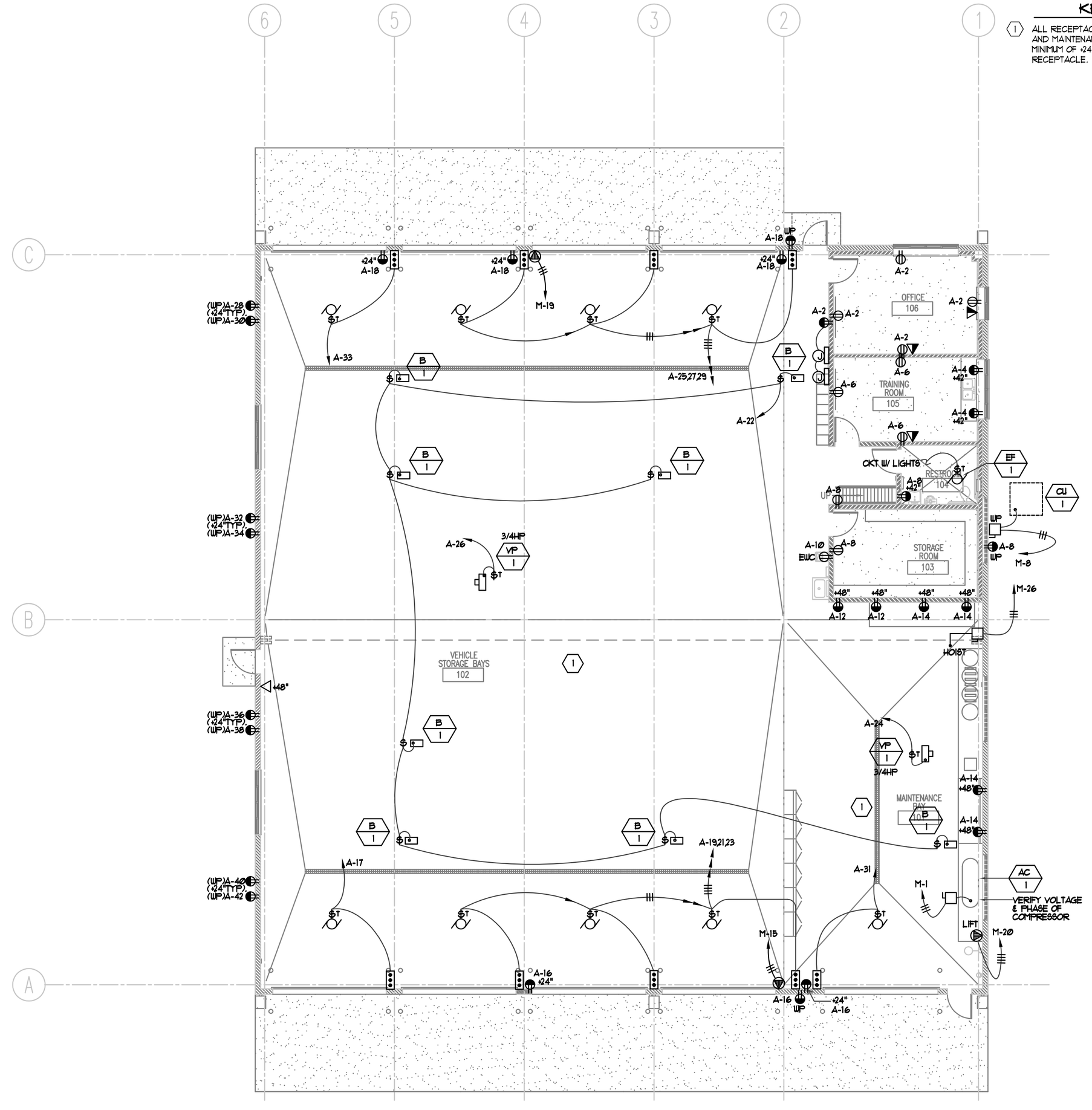

1 E301 POWER FLOOR PLAN
SCALE: 1/8" = 1' - 0"

KEYED NOTES:

1. ALL RECEPTACLES IN VEHICLE STORAGE BAYS AND MAINTENANCE BAY SHALL BE MOUNTED A MINIMUM OF ±24" A.F.F. AND BE A GFCI TYPE RECEPTACLE.

CLIENT

BRIGHAM CITY
MAINTENANCE FACILITY
STATION #1423
1325E. HIGHWAY 90
BRIGHAM CITY, UTAH 84302

DESIGNER

ARCHIPLEX GROUP
architecture · planning · design services
1135 South West Temple, Ste. A
Salt Lake City, UT 84101
P:(801) 961-7070
F:(801) 961-7373

CONSULTANTS

PVE Inc.
Consulting Mechanical Engineers
90 South 400 West, Suite 340
Salt Lake City UT, 84101
Phone: (801) 359-3158
Fax: (801) 521-4114

REGISTRATION

REGISTERED PROFESSIONAL ENGINEER
No. 154867
DEAN P. LEVORSEN
STATE OF UTAH
NOT VALID UNLESS SIGNED

ISSUE

MARK	DATE	DESCRIPTION
	2-15-06	CONSTRUCTION DOCUMENTS
	1-18-06	FINAL REVIEW

DFCM PROJECT NO:	05059900/067045
ARCHIPLEX PROJECT NO:	050013.01
PVE PROJECT NO:	05153.01
DRAWN BY:	K.M.
CHECKED BY:	R.K.R.
DATE:	OCTOBER 6, 2005

KEY PLAN

SHEET TITLE

POWER FLOOR PLAN

E301

© 2004 ARCHIPLEX GROUP