SNOW COLLEGE - SOUTH
SEVIER VALLEY CENTER
REMODEL

800 West 200 South

Richfield, Utah 84701

DFCM PROJECT NO. 05001710

State of Utah– Department of Administrative Services

DIVISION OF FACILITIES CONSTRUCTION AND MANAGEMENT

4110 State Office Building / Salt Lake City, Utah 84114 / 538–3018

JULY 6, 2005

State of Utah
Department of Administrative Services

Division of Facilities
Construction & Management
4110 State Office Building
Salt Lake City, Utah 84114
Phone: (801) 538 - 3018
Fax: (801) 538 - 3267

Internet: http://www.dfcm.state.ut.us

CREATED BY: P+A architects

P+A architects
821 East Kensington Ave.
Salt Lake City, Utah 84105
P: 801.484.1161
F: 801.485.4640
e-mail parchitects@comcast.net

ARCHITECTURE PLANNING DESIGN

BUILDING NAME:

SNOW COLLEGE SOUTH - SEVIER VALLEY CENTER

PROJECT TITLE:

SEVIER VALLEY CENTER REMODEL

MARK	DATE	DESCRIPTION

ISSUE TYPE: CONSTRUCTION DOCUMENTS

ISSUE DATE: JULY 6, 2005

DFCM PROJECT NO: 05001710
CAD PROJECT NO: 2005-05
CAD DWG FILE:
DRAWN BY: BRIAN AND SCOTT
CHK'D BY: SCOTT
COPYRIGHT: STATE OF UTAH

SHEET TITLE

COVER SHEET

SHEET NUMBER

G-I000

PROJECT NAME

SNOW COLLEGE SOUTH SEVIER VALLEY CENTER REMODEL

800 West 200 South
Richfield, Utah 84701
D.F.C.M. PROJECT NO. 05001710

CODE CRITERIA

FIRE RESISTIVE REQUIREMENTS

BUILDING ELEMENT	
EXTERIOR BEARING WALLS	N
INTERIOR BEARING WALLS	N
STRUCTURAL FRAME	N
PARTITIONS – PERMANENT	N
SHAFT ENCLOSURES	N
FLOORS – CEILINGS/FLOORS	N
ROOFS – CEILINGS/FLOORS	N
EXTERIOR DOORS & WINDOWS	N

N = NO REQUIREMENT

CODE REVIEW CRITERIA

NEW OCCUPANCY GROUP	B
EXISTING OCCUPANCY GROUP	A-4
TYPE OF CONSTRUCTION	I-B
FIRE SPRINKERS	SPRINKLE
PROJECT AREA	3124 SQ.FT.
OCCUPANCY RATIO	1 PER 15
TOTAL # OF OCCUPANTS	208
MIN NUMBER OF EXITS AS PER TABLE 1018.1	1-500 OCCUPANTS 2 EXITS REQ.
EXIT ACCESS TRAVEL DIST. AS PER TABLE 1015.1	300 FT W/ APPROVED SPRINKLER
CORRIDOR FIRE-RES. RATING AS PER TABLE 1016.1	OCCUPANCY A-4 AND B NON RATED W/ SPRINKLER SYSTEM

GRAPHIC KEY

CONCRETE
ASPHALT PAVING
FINISH LUMBER
GRAVEL
STEEL STUD PARTITION
WOOD FRAMING
MASONRY
CERAMIC TILE
PLYWOOD

01 / A-2 — DETAIL NUMBER; SHEET ON WHICH DETAIL APPEARS — DETAIL
01 / A-4 — SECTION NUMBER; SHEET ON WHICH SECTION APPEARS
A B C D — ELEVATION VIEW; 01 / A-7 — DETAIL NUMBER; SHEET ON WHICH DETAIL APPEARS; INTERIOR ELEVATION
01 — PARTITION TYPE
101 — DOOR NUMBER
A — WINDOW TYPE

ABBREVIATIONS

Reference to materials or methods have been made on the drawings in accordance with the following abbreviations:

#	NUMBER	GWB.	GYPSUM WALL BOARD
'	FEET	GYP. BD.	GYPSUM WALL BOARD
"	INCHES	HC.	HANDICAPPED
&	AND	HDW.	HARDWARE
@	AT	H.M.	HOLLOW METAL
∅	DIAMETER	HORIZ.	HORIZONTAL
ADJ	ADJUSTABLE	HR.	HOUR
AFF	ABOVE FINISH FLOOR	HT.	HEIGHT
ALUM	ALUMINUM	HVAC	HEATING/VENTILATION/ AIR CONDITIONING
ASTM	AMERICAN SOCIETY FOR TESTING MATERIALS	HYD	HYDRANT
ATS	AUTOMATIC TRANSFER SWITCH	I.D.	INSIDE DIAMETER
		INFO	INFORMATION
BD	BOARD	INSUL.	INSULATION
BITUM.	BITUMINOUS	LAV.	LAVATORY
BLDG	BUILDING	LT.	LIGHT
B.M.	BENCHMARK	MATL.	MATERIAL
B.O.	BOTTOM OF	MAX.	MAXIMUM
BRG.	BEARING	MECH.	MECHANICAL
BTWN.	BETWEEN	MFR.	MANUFACTURER
CER.	CERAMIC	MIN.	MINIMUM
CJ	CONSTRUCTION JOINT	MISC.	MISCELLANEOUS
CLG.	CEILING	M.O.	MASONRY OPENING
CLR.	CLEAR	MTL.	METAL
CMU	CONCRETE MASONRY UNIT	NIC	NOT IN CONTRACT
COL.	COLUMN	NO.	NUMBER
CONC.	CONCRETE	N.T.S.	NOT TO SCALE
CONT.	CONTINUOUS	O.C.	ON CENTER
CONST.	CONSTRUCTION	O.D.	OUTSIDE DIAMETER
COORD.	COORDINATE	O.H.	OVERHEAD
CTJ	CONTRACTION JOINT	OPP.	OPPOSITE
DBL.	DOUBLE	PART.	PARTITION
DPW	DIRECTOR OF PUBLIC WORKS	PERP.	PERPENDICULAR
DIA.	DIAMETER	PL.	PLATE
DPG	DUGWAY PROVING GROUND	PNTD.	PAINTED
DTL.	DETAIL	PSI	POUNDS PER SQUARE INCH
DWGS.	DRAWINGS	R.D.	ROOF DRAIN
EA.	EACH	RAD.	RADIUS
EJ	EXPANSION JOINT	REINF.	REINFORCED
ELEV.	ELEVATION	REQ'D	REQUIRED
EQ.	EQUAL	RET.	RETURN
E.S.	EACH SIDE	REV.	REVERSED
EXIST.	EXISTING	RM.	ROOM
EXPAN.	EXPANSION	R.O.	ROUGH OPENING
EXT.	EXTERIOR	SCHED.	SCHEDULE
E.W.C.	ELECTRIC WATER COOLER	SHR.	SHOWER
F.D.	FLOOR DRAIN	SHT.	SHEET
FDN.	FOUNDATION	SIM.	SIMILAR
F.E.	FIRE EXTINGUISHER	SPEC.	SPECIFICATION
F.E.C.	FIRE EXTINGUISHER CABINET	STD.	STANDARD
F.F.	FINISH FLOOR	STR.	STRUCTURAL
FIN.	FINISH	SUSP.	SUSPENDED
FLR.	FLOOR	THRU	THROUGH
F.L.	FLOW LINE	T.O.	TOP OF
FTG.	FOOTING	T.O.A.	TOP OF ASPHALT
GA.	GAGE	T.O.C.	TOP OF CURB
GALV.	GALVANIZED	T.O.F.	TOP OF FOOTING
GF-CI	GOVERNMENT FURNISHED CONTRACTOR INSTALLED	T.O.S.	TOP OF SLAB OR SIDEWALK
		T.O.W.	TOP OF WALL
GF-GI	GOVERNMENT FURNISHED GOVERNMENT INSTALLED	TYP.	TYPICAL
		VERT.	VERTICAL
G.I.	GALVANIZED STEEL	VEST.	VESTIBULE
GND.	GROUND	W/	WITH
GOVT.	GOVERNMENT	WD	WOOD

DESIGN TEAM

ARCHITECT

P+A ARCHITECTS
CONTACT: SCOTT PRIOR
821 EAST KENSINGTON AVENUE
SALT LAKE CITY, UTAH 84105
PHONE: 801.484.1161
FAX: 801.485.4640

STRUCTURAL

SHEN ENGINEERS, INC.
CONTACT: HENRY SHEN
3335 SOUTH 900 EAST, SUITE 250
SALT LAKE CITY, UTAH 84106
PHONE: 801.466.2625
FAX: 801.466.2656

MECHANICAL

HEATH ENGINEERING
CONTACT: LARRY VEIGEL
377 WEST 800 NORTH
SALT LAKE CITY, UTAH 84103
PHONE: 801.322.0487
FAX: 801.466.2656

ELECTRICAL

BYTHEWAY ENGINEERING
CONTACT: CECELIA BYTHEWAY
450 WEST 85 SOUTH (SAMPSON LANE)
GLENWOOD, UTAH 84730-0541
PHONE: 435.896.6954
FAX: 435.896.5784

LIST OF DRAWINGS

	ARCHITECTURAL	
1 OF 12	A-GI000	COVER SHEET
2 OF 12	A-GI001	ARCHITECTURAL ABBREVIATIONS AND VICINITY MAP
3 OF 12	A-SP101	ARCHITECTURAL SITE PLAN
4 OF 12	A-FP101	ARCHITECTURAL FLOOR PLAN AND REFLECTED CEILING PLAN
5 OF 12	A-DT501	FINISH SCHEDULES, DOOR SCHEDULES AND DOOR DETAILS
6 OF 12	A-DT502	ENLARGED PLANS, TYP SECTION AND CEILING DETAILS
	MECHANICAL	
7 OF 12	M-001	MECHANICAL EQUIPMENT SCHEDULES AND CONTROL DIAG.
8 OF 12	M-101	PARTIAL MECHANICAL DEMOLITION PLANS AND REMODEL PLANS
9 OF 12	M-501	MECHANICAL DETAILS
	ELECTRICAL	
10 OF 12	EL-101	ELECTRICAL LIGHTING PLAN AND AUDIO/VISUAL PLAN
11 OF 12	EP-102	ELECTRICAL POWER/DATA/TELEPHONE PLAN
	STRUCTURAL	
12 OF 12	SGN-101	STRUCTURAL NOTES, FRAMING AND DETAILS

GENERAL NOTES

1. SUBCONTRACTORS SHALL FAMILIARIZE THEMSELVES WITH ALL PORTIONS OF THE DRAWINGS, SPECIFICATIONS AND ADDENDA THAT PERTAIN TO THEIR WORK. THEY SHALL BE HELD RESPONSIBLE FOR ADHERING TO THOSE REQUIREMENTS AND SHALL NOT PREPARE ANY BID FROM PARTIAL SETS.
2. ALL NUT, BOLTS AND MISCELLANEOUS METAL EXPOSED TO WEATHER SHALL BE GALVANIZED UNLESS OTHERWISE NOTED.
3. ALL WORK SHALL COMPLY STRICTLY WITH THE INTERNATIONAL BUILDING CODE 2003, LATEST EDITION, AND ALL LOCAL CODES AND ORDINANCES.
4. CONTRACTOR SHALL VERIFY ALL DIMENSIONS AND SITE CONDITIONS AND SHALL REPORT ANY INCONSISTENCIES TO THE CONTRACTING OFFICER.
5. CONTRACTOR SHALL REMOVE ALL SURPLUS MATERIALS, FALSE WORK, TEMPORARY STRUCTURES, INCLUDING: FOUNDATIONS AND DEBRIS OF ANY NATURE RESULTING FROM HIS OPERATIONS, AND TO PUT THE SITE IN A NEAT AND ORDERLY CONDITION.
6. DIMENSIONAL DISCREPANCIES SHALL BE CLARIFIED WITH THE CONTRACTING OFFICER.

VICINITY MAP

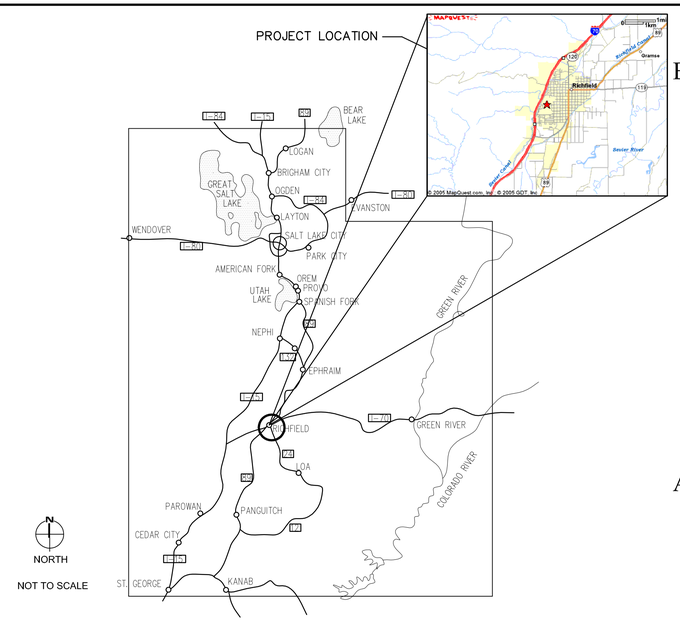

State of Utah
Department of Administrative Services

Division of Facilities Construction & Management
4110 State Office Building
Salt Lake City, Utah 84114
Phone: (801) 538 - 3018
Fax: (801) 538 - 3267

Internet: http://www.dfcm.state.ut.us

CREATED BY: P+A architects

P+A architects
821 East Kensington Ave.
Salt Lake City, Utah 84105
P: 801.484.1161
F: 801.485.4640
e-mail parchitects@comcast.net

ARCHITECTURE PLANNING DESIGN

BUILDING NAME:

SNOW COLLEGE SOUTH - SEVIER VALLEY CENTER

PROJECT TITLE:

SEVIER VALLEY CENTER REMODEL

MARK	DATE	DESCRIPTION

ISSUE TYPE: CONSTRUCTION DOCUMENTS

ISSUE DATE: JULY 6, 2005

DFCM PROJECT NO: 05001710
CAD PROJECT NO: 2005-05
CAD DWG FILE:
DRAWN BY: BRIAN AND SCOTT
CHK'D BY: SCOTT

COPYRIGHT: STATE OF UTAH

SHEET TITLE

COVER SHEET

SHEET NUMBER

G-1001

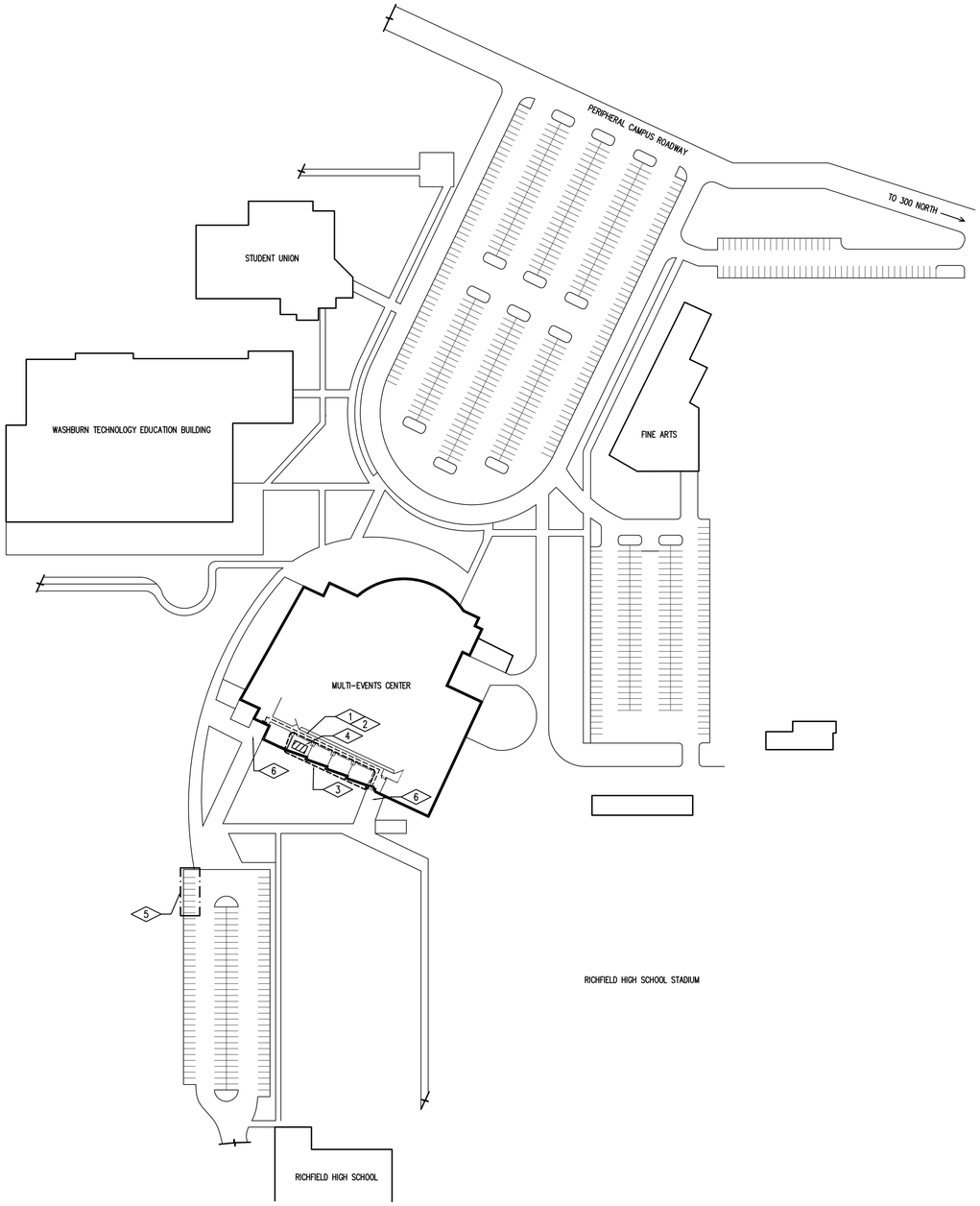

PLAN NORTH TRUE NORTH

01 ASP101 SITE PLAN
SCALE 1" = 100'-0"

REFERENCE NOTES

1. GENERAL CONTRACTOR SHALL KEEP EXISTING CORRIDOR CLEAR FOR ACCESS DURING CONSTRUCTION AT ALL TIME.
2. DASHED LINE REPRESENTS MEANS OF EGRESS
3. DASHED LINE REPRESENTS CONTRACT LIMIT LINE
4. GENERAL CONTRACTORS STAGING AREA
5. GENERAL CONTRACTORS PARKING AREA
6. GENERAL CONTRACTOR SHALL KEEP ALL BUILDING ACCESS CLEAR AND OPEN DURING CONSTRUCTION.

GENERAL NOTES

1. GENERAL CONTRACTOR IS RESPONSILBE FOR THE REPLACEMENT OF ANY EXISTING CONCRETE SIDEWALKS, ASPHALT PAVING, FENCING, LANDSCAPING, ETC. DISTURBED OR DESTOYED DURING CONSTRUCTION.
2. GENERAL CONTRACTOR SHALL VERIFY ALL EXISTING SITE CONDITIONS PRIOR TO BIDDING.

LEGEND

- CONTRACT LIMIT LINE
- CONTRACOTR STAGING AREA
- CONTRACTOR PARKING AREA

State of Utah
Department of Administrative Services
Division of Facilities Construction & Management
4110 State Office Building
Salt Lake City, Utah 84114
Phone: (801) 538 - 3018
Fax: (801) 538 - 3267
Internet: http://www.dfcm.state.ut.us

CREATED BY: P+A architects

P+A architects
821 East Kensington Ave.
Salt Lake City, Utah 84105
P: 801.484.1161
F: 801.485.4640
e-mail parchitects@comcast.net

ARCHITECTURE PLANNING DESIGN

BUILDING NAME:

SNOW COLLEGE SOUTH - SEVIER VALLEY CENTER

PROJECT TITLE:

SEVIER VALLEY CENTER REMODEL

MARK	DATE	DESCRIPTION

ISSUE TYPE: CONSTRUCTION DOCUMENTS

ISSUE DATE: JULY 6, 2005

DFCM PROJECT NO: 05001710
CAD PROJECT NO: 2005-05
CAD DWG FILE:
DRAWN BY: BRIAN AND SCOTT
CHK'D BY: SCOTT
COPYRIGHT: STATE OF UTAH

SHEET TITLE

SITE PLAN

SHEET NUMBER

A-SP101

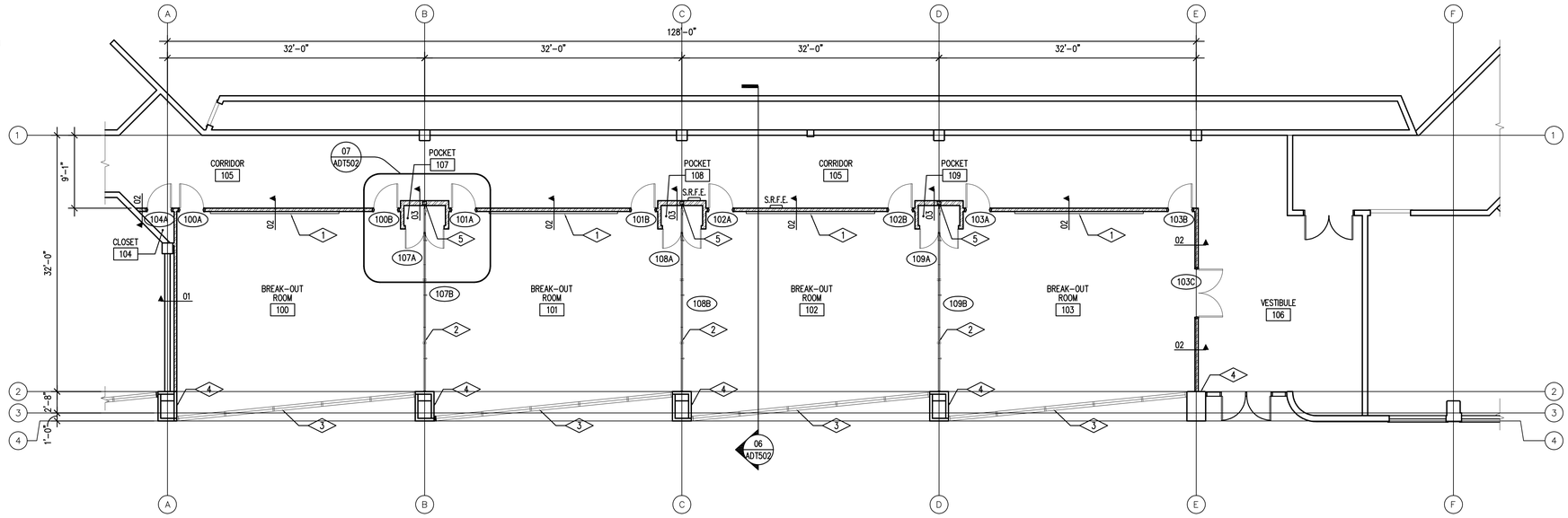

02 AFP101 NEW FLOOR PLAN
SCALE 1/8" = 1'-0"
PLAN NORTH
0 4' 8' 16'

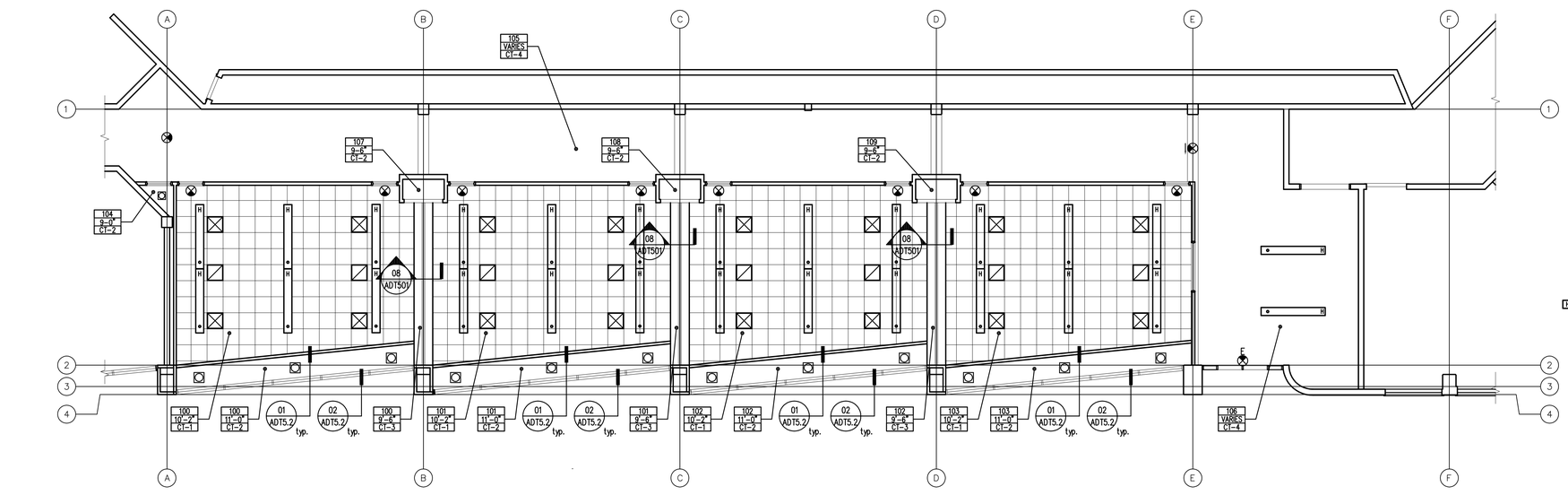

01 AFP101 REFLECTED CEILING PLAN
SCALE 1/8" = 1'-0"
PLAN NORTH
0 4' 8' 16'

FLOOR PLAN REFERENCE NOTES

1. NEW MARKER WHITE BOARD WITH TRAY. MARKER BOARD SIZE TO BE 5'-0" HIGH X 16'-0" LONG, SEE SPECIFICATION
2. NEW OPERABLE PARTITION DOOR, SEE SPECIFICATION SECTION 10650 AND DETAILS
3. EXISTING BUILDING WINDOW FRAME AND GLASING SYSTEM TO BE LEFT UNDISTURBED.
4. EXISTING BUILDING MASONRY WALL TO BE LEFT UNDISTURBED.
5. STEEL COLUMN, SEE STRUCTURAL DRAWING.

GENERAL NOTES

1. REFER TO FINISH SCHEDULE FOR ADDITIONAL FINISH NOTES.

FLOOR PLAN LEGEND

- 100A — DOOR TAG
- RM. NAME 100 — ROOM TAG
- W.P. — WORKING POINT
- 03 — WALL TYPE, SEE WALL TYPE DRAWING
- S.R.F.E. — SEMI-RECESSED FIRE EXTINGUISHER
- HATCH PATTERN INDICATES NEW METAL STUD AND GYPSUM BOARD WALLS. SEE WALL TYPES FOR WALL CONSTRUCTION AND FIRE RATING

CEILING PLAN REFERENCE NOTES

1. GENERAL CONTRACTOR SHALL VERIFY BOTTOM OF GYPSUM BOARD HEIGHT BASED ON EXISTING WINDOW MULLION HEIGHT. EXISTING WINDOW MULLION HEIGHT APROXIMATLLY 11'-0", SEE DETAIL.

GENERAL NOTES

1. NEW SUSPENDED CEILING GRIDS SHALL BE CENTERED IN SPACES AS SHOWN ON REFLECTED CEILING PLANS, UNLESS SHOWN OTHERWISE.

LEGEND

- NEW EXIT SIGN, SEE ELECTRICAL DRAWINGS.
- E — EXISTING EXIT SIGN, SEE ELECTRICAL DRAWINGS.
- H — HANGING, DIRECT/INDIRECT LIGHT FIXTURE, SEE ELECTRICAL DRAWINGS.
- RECESSED CAN LIGHT FIXTURE, SEE ELECTRICAL DRAWINGS
- 101 / 9'-0" / C1 — ROOM NUMBER / CEILING HEIGHT / CEILING TYPE
- SUPPLY AIR DIFFUSER, GENERAL CONTRACTOR TO VERIFY WITH MECHANICAL DRAWINGS
- RETURN AIR DIFFUSER, GENERAL CONTRACTOR TO VERIFY WITH MECHANICAL DRAWINGS

State of Utah
Department of Administrative Services
Division of Facilities Construction & Management
4110 State Office Building
Salt Lake City, Utah 84114
Phone: (801) 538 - 3018
Fax: (801) 538 - 3267
Internet: http://www.dfcm.state.ut.us

CREATED BY: P+A architects

P+A architects
821 East Kensington Ave.
Salt Lake City, Utah 84105
P: 801.484.1161
F: 801.485.4640
e-mail parchitects@comcast.net

ARCHITECTURE PLANNING DESIGN

BUILDING NAME:
SNOW COLLEGE SOUTH - SEVIER VALLEY CENTER

PROJECT TITLE:
SEVIER VALLEY CENTER REMODEL

MARK	DATE	DESCRIPTION

ISSUE TYPE: CONSTRUCTION DOCUMENTS

ISSUE DATE: JULY 6 2005

DFCM PROJECT NO: 05001710
CAD PROJECT NO: 2005-05
CAD DWG FILE:
DRAWN BY: BRIAN AND SCOTT
CHK'D BY: SCOTT
COPYRIGHT: STATE OF UTAH

SHEET TITLE
FLOOR PLAN AND REFLECTED CEILING PLAN

SHEET NUMBER
A-FP101

DOOR AND FRAME SCHEDULE

DOOR	SINGLE/PAIR	DOOR SIZE WxH	DOOR DEPTH	DOOR TYPE	DOOR MATL	DOOR FINISH	FRAME DEPTH	FRAME TYPE	FRAME MATL	FRAME FINISH	FRAME DETAIL HEAD	FRAME DETAIL JAMB	FRAME DETAIL THRSH	HARD-WARE SET	FIRE RATING DOOR & FRAME	NOTES
100A	S	3'-0" x 7'-0"	1-¾"	A	WD	STAIN	5-¾"	01	H.M.	PAINT	03/ADT501	03/ADT501	02/ADT501	1	NONE	
100B	S	3'-0" x 7'-0"	1-¾"	A	WD	STAIN	5-¾"	01	H.M.	PAINT	03/ADT501	03/ADT501	02/ADT501	1	NONE	
101A	S	3'-0" x 7'-0"	1-¾"	A	WD	STAIN	5-¾"	01	H.M.	PAINT	03/ADT501	03/ADT501	02/ADT501	1	NONE	
101B	S	3'-0" x 7'-0"	1-¾"	A	WD	STAIN	5-¾"	01	H.M.	PAINT	03/ADT501	03/ADT501	02/ADT501	1	NONE	
102A	S	3'-0" x 7'-0"	1-¾"	A	WD	STAIN	5-¾"	01	H.M.	PAINT	03/ADT501	03/ADT501	02/ADT501	1	NONE	
102B	S	3'-0" x 7'-0"	1-¾"	A	WD	STAIN	5-¾"	01	H.M.	PAINT	03/ADT501	03/ADT501	02/ADT501	1	NONE	
103A	S	3'-0" x 7'-0"	1-¾"	A	WD	STAIN	5-¾"	01	H.M.	PAINT	03/ADT501	03/ADT501	02/ADT501	1	NONE	
103B	S	3'-0" x 7'-0"	1-¾"	A	WD	STAIN	5-¾"	01	H.M.	PAINT	03/ADT501	03/ADT501	02/ADT501	1	NONE	
103C	P	3'-0" x 7'-0"	1-¾"	A	WD	STAIN	5-¾"	01	H.M.	PAINT	03/ADT501	03/ADT501	02/ADT501	2	NONE	
104A	S	3'-0" x 7'-0"	1-¾"	A	WD	STAIN	5-¾"	01	H.M.	PAINT	03/ADT501	03/ADT501	02/ADT501	3	NONE	
107A	P	2'-4" x 9'-6"	—	B	—	FABRIC	3"	02	—	PAINT	11/ADT501	05/ADT501	07/ADT501	—	NONE	DOOR AND FRAME BY OPERABLE PARTITION MFR.
107B		SEE SPECIFICATION FOR OPERABLE PARTITION MFR.									08/ADT501	—	04/ADT501	—	NONE	DOOR AND FRAME BY OPERABLE PARTITION MFR.
108A	P	2'-4" x 9'-6"	—	B	—	FABRIC	3"	02	—	PAINT	11/ADT501	05/ADT501	07/ADT501	—	NONE	DOOR AND FRAME BY OPERABLE PARTITION MFR.
108B		SEE SPECIFICATION FOR OPERABLE PARTITION MFR.									08/ADT501	—	04/ADT501	—	NONE	DOOR AND FRAME BY OPERABLE PARTITION MFR.
109A	P	2'-4" x 9'-6"	—	B	—	FABRIC	3"	02	—	PAINT	11/ADT501	05/ADT501	07/ADT501	—	NONE	DOOR AND FRAME BY OPERABLE PARTITION MFR.
109B		SEE SPECIFICATION FOR OPERABLE PARTITION MFR.									08/ADT501	—	04/ADT501	—	NONE	DOOR AND FRAME BY OPERABLE PARTITION MFR.

DOOR NOTES.

1. OPERABLE PARTITION DOORS AND POCKET DOOR SIZES TO BE FIELD VERIFIED BY GENERA CONTRACTOR AND OPERABLE PARTITION DOOR MANUFACTURER.

FLOOR FINISHES

F1	EXISTING SEALED CONCRETE
F2	NEW CARPET, SEE SPECIFICATION

BASE TYPES

B1	NEW 4" COVED RUBBER BASE
B2	NEW 4" STRAIGHT EDGE RUBBER BASE

WALL FINISHES

W1	NEW GYPSUM BOARD, PRIMED AND PAINTED
W2	STACKABLE, FABRIC COVERED PARTITION PANEL DOOR
W3	EXISTING ALUMINUM WINDOW FRAMING AND GLAZING SYSTEM TO REMAIN UNDISTURBED
W4	EXISTING MASONRY WALL TO REMAIN UNDISTURBED

CEILING TYPES

CT-1	NEW 2 'x2' LAY-IN CEILING SYSTEM SEE SPECIFICATION
CT-2	PRIMED AND PAINTED 5/8" TYPE "X" GYPSUM BOARD ON 3-5/8" METAL STUD FRAMING @ 16" O.C.
CT-3	STACKABLE, FABRIC COVERED PARTITION PANEL DOOR HEAD FRAMED IN PRIMED AND PAINTED 5/8" TYPE "X" GYP. BD. DROPPED SOFFIT, SEE DETAILS
CT-4	EXISTING CONCRETE STRUCTURE TO REMAIN UNDISTURBED.

ROOM FINISH SCHEDULE

ROOM NO.	ROOM NAME	FLOOR	BASE	WALLS NORTH	WALLS EAST	WALLS SOUTH	WALLS WEST	CEILING TYPE	CEILING HEIGHT	NOTES
100	BREAK-OUT ROOM	F2	B2	W1 W2	W3	W1	W1	CT-1 CT-3	VARIES	SEE REFLECTED CEILING PLAN AND DETAIL FOR HEIGHT OF PARTITION DOOR HEAD
101	BREAK-OUT ROOM	F2	B2	W1 W2	W3	W1 W2	W1	CT-1 CT-3	VARIES	SEE REFLECTED CEILING PLAN AND DETAIL FOR HEIGHT OF PARTITION DOOR HEAD
102	BREAK-OUT ROOM	F2	B2	W1 W2	W3	W1 W2	W1	CT-1 CT-3	VARIES	SEE REFLECTED CEILING PLAN AND DETAIL FOR HEIGHT OF PARTITION DOOR HEAD
103	BREAK-OUT ROOM	F2	B2	W1	W3	W1 W2	W1	CT-1 CT-3	VARIES	SEE REFLECTED CEILING PLAN AND DETAIL FOR HEIGHT OF PARTITION DOOR HEAD
104	CLOSET	F2	B2	W1	W1	W1	W1	CT-2	9'-0"	
105	CORRIDOR	F1	B1	W4	W1	—	W4	CT-4	VARIES	
106	VESTIVULE	F1	B1	W4	W4	W1	W4	CT-4	VARIES	
107	POCKET	F2	B2	W1	W1 W2	W1	W1	CT-2	9'-6"	
108	POCKET	F2	B2	W1	W1 W2	W1	W1	CT-2	9'-6"	
109	POCKET	F2	B2	W1	W1 W2	W1	W1	CT-2	9'-6"	

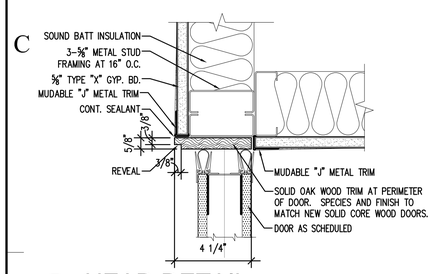

9-13.dwg 11 ADT501 HEAD DETAIL
SCALE 3" = 1'-0"

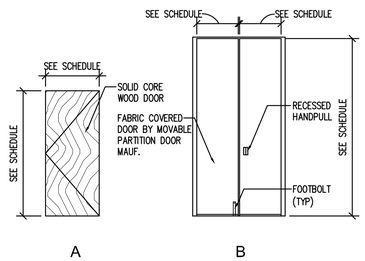

7-01.dwg 10 ADT501 DOOR TYPES
SCALE 1/4" = 1'-0"

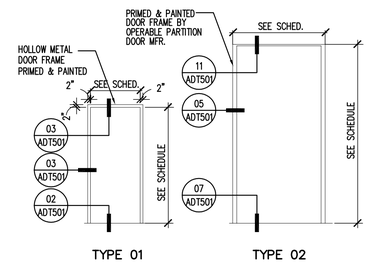

7-02.dwg 09 ADT501 DOOR FRAME TYPES
1/4" = 1'-0"

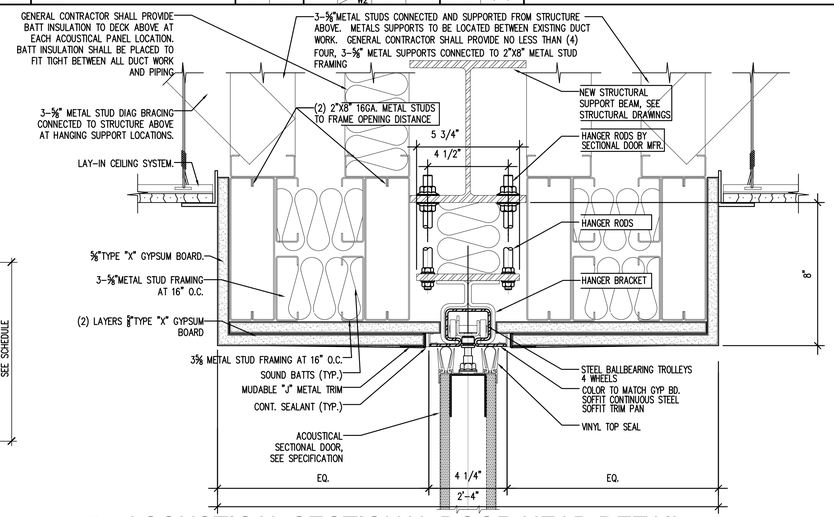

9-01.dwg 08 ADT501 ACOUSTICAL SECTIONAL DOOR HEAD DETAIL
SCALE 3" = 1'-0"

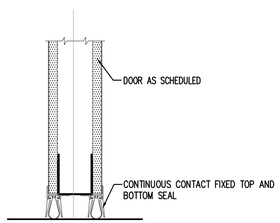

9-14.dwg 07 ADT501 DOOR SEAL DETAIL
SCALE 3" = 1'-0"

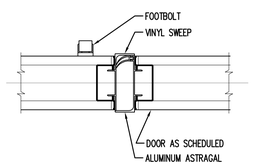

9-06.dwg 06 ADT501 CLOSURE DETAIL
SCALE 3" = 1'-0"

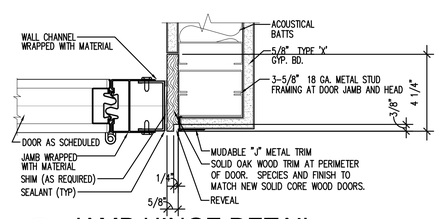

9-05.dwg 05 ADT501 JAMB HINGE DETAIL
SCALE 3" = 1'-0"

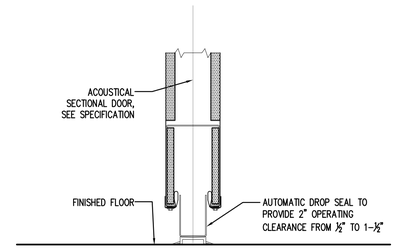

9-05.dwg 04 ADT501 ACOUSTICAL SECTIONAL DOOR SILL DETAIL
SCALE 3" = 1'-0"

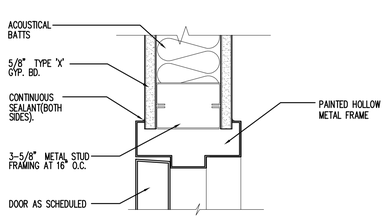

9-03.dwg 03 ADT501 JAMB / HEAD DETAIL
SCALE 3" = 1'-0"

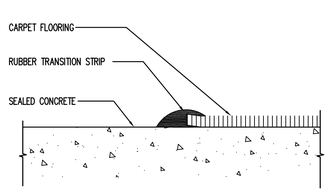

9(440).dwg 02 ADT501 VCT THRESHOLD
SCALE 3" = 1'-0"

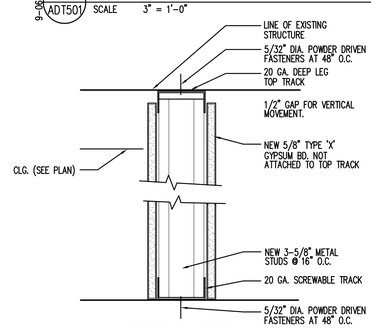

NON FIRE RATED WALLS HEAD DETAIL

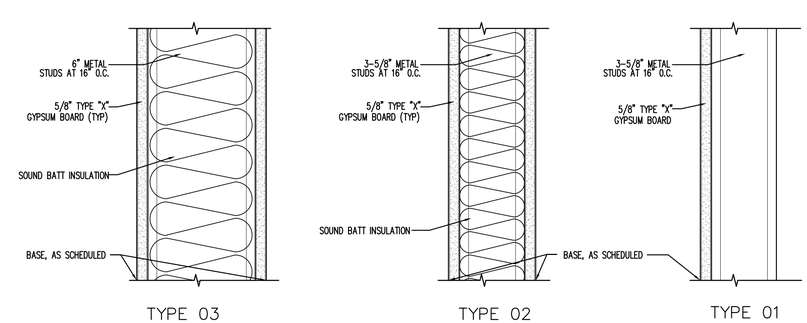

1-01.DWG 01 ADT501 WALL TYPES AND STEEL TRACK CONNECTION (TYP)
SCALE 3" = 1'-0"

State of Utah
Department of Administrative Services
Division of Facilities Construction & Management
4110 State Office Building
Salt Lake City, Utah 84114
Phone: (801) 538 - 3018
Fax: (801) 538 - 3267
Internet: http://www.dfcm.state.ut.us

CREATED BY: P+A architects

P+A architects
821 East Kensington Ave.
Salt Lake City, Utah 84105
P: 801.484.1161
F: 801.485.4640
e-mail parchitects@comcast.net

ARCHITECTURE PLANNING DESIGN

BUILDING NAME:

SNOW COLLEGE SOUTH - SEVIER VALLEY CENTER

PROJECT TITLE:

SEVIER VALLEY CENTER REMODEL

MARK	DATE	DESCRIPTION

ISSUE TYPE: CONSTRUCTION DOCUMENTS

ISSUE DATE: JULY 6, 2005

DFCM PROJECT NO: 05001710
CAD PROJECT NO: 2005-05
CAD DWG FILE:
DRAWN BY: BRIAN AND SCOTT
CHK'D BY: SCOTT

COPYRIGHT: STATE OF UTAH

SHEET TITLE

ROOM FINISH SCHEDULE, DOOR SCHEDULE DOOR DETAIL WALL TYPES

SHEET NUMBER

A-DT501

REFERENCE NOTES

1. EXISTING BUILDING GLAZING SYSTEM TO REMAIN UNDISTURBED.
2. EXISTING BUILDING STRUCTURAL PROFILE.
3. EXISTING MECHANICAL DUCT SYSTEM, SEE MECHANICAL DRAWINGS.
4. ACOUSTICAL SECTIONAL DOOR HEAD BEYOND, SEE DETAIL 07/ADT501.
5. 3-⅝" DIAG. METAL STUD BRACING @ SECTIONAL ACOUSTICAL DOOR, SEE DETAIL 07/ADT501.
6. BASE, AS SCHEDULED.
7. MASONRY BUILDING COLUMN BEYOND.
8. GYPSUM BOARD OVER METAL STUDS POCKET BEYOND.
9. 3-⅝" METAL STUD FRAMING @ 16" O.C.
10. SOUND BATT INSULATION.
11. 3-⅝" METAL STUD DIAG. BRACING AT 32" O.C.
12. NEW LAY-IN CEILING SYSTEM, SEE SPECIFICATION.
13. STEEL BEAM SUPPORT FOR ACOUSTICAL SECTIONAL DOOR, SEE STRUCTURAL DRAWINGS.
14. EXISTING FIRE SPRINKLER PIPING , SEE MECHANICAL DRAWINGS AND SPECIFICATIONS.
15. ⅝" TYPE "X" GYP. BD. OVER 3-⅝" METAL STUDS @ 16" O.C. WALL WITH SOUND BATT INSULATION, SEE WALL TYPES
16. STEEL COLUMN, SEE STRUCTURAL

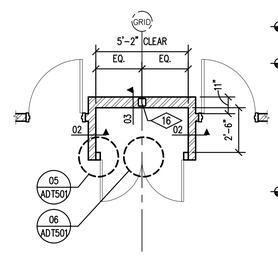

07 ADT502 TYP. POCKET DOOR PLAN
SCALE 1/4" = 1'-0"

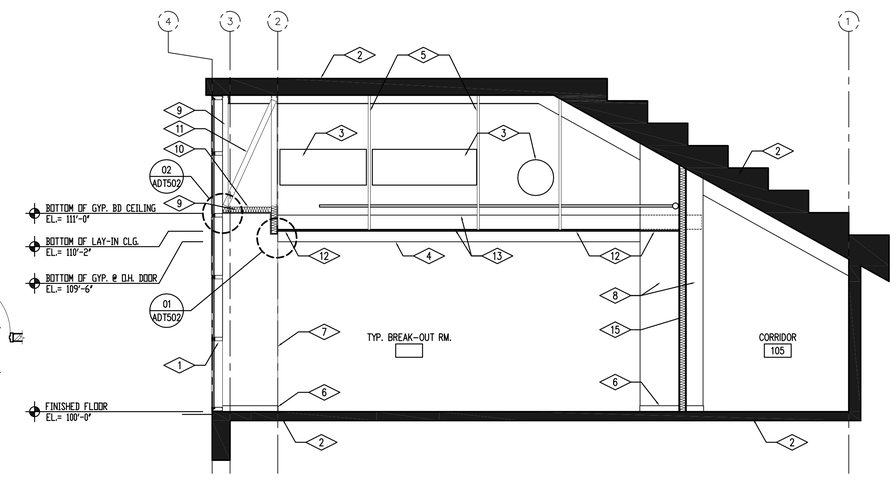

06 ADT502 TYPICAL SECTION THROUGH BREAK-OUT ROOM
SCALE 1/4" = 1'-0"

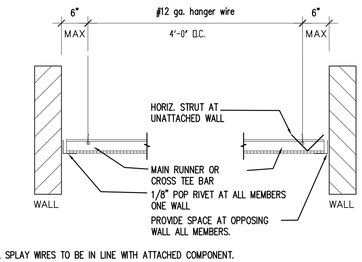

NOTES:

1. ALL SPLAY WIRES TO BE IN LINE WITH ATTACHED COMPONENT.
2. ALL SPLAY WIRES TAUT AND TIED, BOTH ENDS WITH MIN. OF THREE TURNS IN 1" OF RUN.
3. COMPLY WITH UBC STANDARD 47-18 & ASTM E-5800.
4. CEILING DETAIL NOTES AND DETAILS SHOWN APPLY TO ALL SUSPENDED CEILINGS.
5. REFER TO ABOVE REFERENCE STANDARDS FOR CEILING SUPPORT AT LIGHT FIXTURES, AIR TERMINALS AND OTHER SERVICES.
6. SUSPENDED LIGHT FIXTURES FROM THE STRUCTURE IN AT LEAST TWO LOCATIONS WITHOUT REGARD TO THE SUSPENDED CEILING GRID.

05 ADT502 SUSPENDED CEILING DETAIL
SCALE 3" = 1'-0"

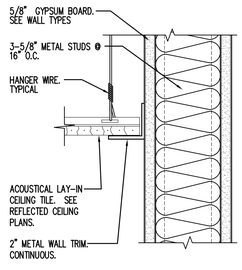

04 ADT502 LAY-IN CEILING DETAIL
SCALE 3" = 1'-0"

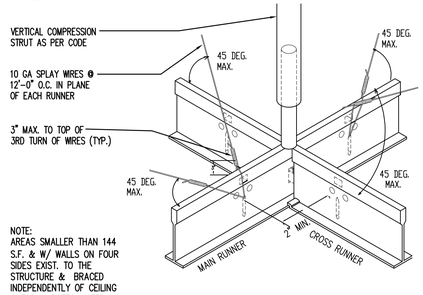

NOTE:
AREAS SMALLER THAN 144 S.F. & W/ WALLS ON FOUR SIDES EXIST. TO THE STRUCTURE & BRACED INDEPENDENTLY OF CEILING @ TOP & BOTTOM NEED NOT BE SEISMICALLY BRACED

03 ADT502 SUSPENDED CEILING
SCALE 3" = 1'-0"

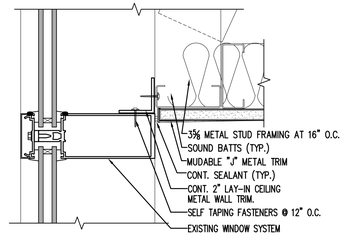

02 ADT502 CEILING DETAIL
SCALE 3" = 1'-0"

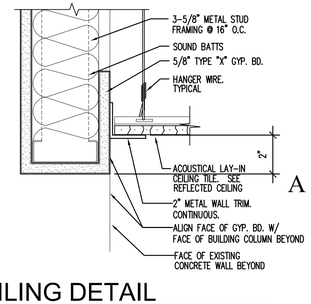

01 ADT502 CEILING DETAIL
SCALE 3" = 1'-0"

State of Utah
Department of Administrative Services

Division of Facilities Construction & Management
4110 State Office Building
Salt Lake City, Utah 84114
Phone: (801) 538 - 3018
Fax: (801) 538 - 3267

Internet: http://www.dfcm.state.ut.us

CREATED BY: P+A architects

P+A architects
821 East Kensington Ave.
Salt Lake City, Utah 84105
P: 801.484.1161
F: 801.485.4640
e-mail parchitects@comcast.net

ARCHITECTURE PLANNING DESIGN

BUILDING NAME:

SNOW COLLEGE SOUTH - SEVIER VALLEY CENTER

PROJECT TITLE:

SEVIER VALLEY CENTER REMODEL

MARK	DATE	DESCRIPTION

ISSUE TYPE: CONSTRUCTION DOCUMENTS

ISSUE DATE: JULY 6, 2005

DFCM PROJECT NO: 05001710
CAD PROJECT NO: 2005-05
CAD DWG FILE:
DRAWN BY: BRIAN AND SCOTT
CHK'D BY: SCOTT

COPYRIGHT: STATE OF UTAH

SHEET TITLE

CEILING DETAILS
ENLARGED PLAN
&
TYPICAL SECTION

SHEET NUMBER

A-DT502

MECHANICAL SYMBOL LEGEND

SYMBOL	DESCRIPTION
	NEW CONNECTION
	SUPPLY DUCT (CROSS SECTION)
	RETURN AIR OR EXHAUST DUCT (CROSS SECTION)
	ROUND DUCT (CROSS SECTION)
	FLAT OVAL (CROSS SECTION)
	RISE OR DROP IN ROUND OVAL DUCT
24"x12"	DUCT SIZE, INSIDE CLEAR DIMENSION IN INCHES
RISE	DUCT RISE
	DROP OR RISE IN SUPPLY DUCT
	ACOUSTICAL LINING IN DUCT
	TURNING VANES IN DUCT
H.D.	HAND DAMPER
	SUPPLY AIR DIRECTION
	RETURN AIR OR EXHAUST DIRECTION
	SUPPLY DIFFUSER
	RETURN AIR GRILLE
	EXHAUST GRILLE
	SPIN-IN FITTING
	BRANCH DUCT TAKE-OFF
S	TEMPERATURE SENSOR
	DROP IN PIPE
	RISE IN PIPE
	VALVE IN RISE
	UNION
	GATE VALVE
	BALL VALVE
	CONTROL VALVE (PLAN VIEW)
	CHECK VALVE
	CAP
	CONCENTRIC REDUCER
	FLOW CONTROLLER OR BALANCE VALVE
— HWS —	GLYCOL HEATING WATER SUPPLY 30%
— HWR —	GLYCOL HEATING WATER RETURN 30%

CABINET HEATER (CH)

SYMBOL	AIR FLOW CFM	TYPE	FAN MOTOR					ELECTRICAL				TRANE MODEL	DUTY	REMARKS
			MIN CAPACITY BTUH	ENTERING WATER TEMP °F	HEATING AIR TEMP °F	GPM	WATER PRESS. DROP MAX. FT. W.C.	MOTOR WATTS	VOLTS	HERTZ	PHASE			
CH-106	800	FLOOR	51,000	180	65	3.5	4.9	205	120	60	1	FFBB-100	ENTRY 184	2 ROW COIL

SELECTION BASED ON TRANE
SEE SPECIFICATION SECTION 15830

GRILLE AND DIFFUSER SCHEDULE

SYMBOL	FACE PANEL SIZE	TYPE	KRUEGER MODEL	TITUS MODEL	REMARKS
S-1	24"x24"	CEILING	1400	TMS	COLOR AND FINISH BY ARCHITECT
S-2	VARIES	SIDEWALL DOUBLE DEFLECTION	880H	300R	-
R-1	VARIES	CEILING PERFORATED	6290	PAR	COLOR AND FINISH BY ARCHITECT
R-2	12"x8"	SIDE WALL	580H	33R	COLOR AND FINISH BY ARCHITECT

SEE DRAWING FOR CFM, NECK SIZE, AIR PATTERN, SLOT NUMBER AND LENGTH.
REFER TO ARCHITECTURAL FOR CEILING AND GRID TYPE.

VARIABLE VOLUME AIR BOXES WITH REHEAT (VAVR)

SYMBOL	TITUS SIZE	CFM RANGE	TITUS MODEL	SYSTEM OPERATING STATIC IN. W.C.	AIR PRESSURE DROP W/ 4 ROW COIL IN. W.C.	COIL DIMENSION INCH.	REMARKS
VAVR_	5	0-300	DESV	.75	0.50	12"x8"	
VAVR_	6	300-400	DESV	.75	0.50	12"x8"	
VAVR_	8	401-600	DESV	.75	0.50	12"x10"	
VAVR_	9	601-850	DESV	.75	0.50	14"x12"-1/2"	
VAVR_	10	851-900	DESV	.75	0.50	14"x12"-1/2"	
VAVR_	12	901-1250	DESV	.75	0.50	16"x15"	
VAVR_	14	1251-1850	DESV	.75	0.50	20"x17"-1/2"	
VAVR_	16	1851-2200	DESV	.75	0.50	24"x18"	
VAVR_	24x16	2200-3500	DESV	.75	0.50	38"x18"	

SEE SPECIFICATION SECTION 15930

VARIABLE VOLUME WITH REHEAT (VAVR)

SYMBOL	ROOM SERVED	BALANCE AIRFLOW CLG. CFM	MAX. AIRFLOW HTG. CFM	MINIMUM AIRFLOW CFM	HEATING COIL			TITUS SIZE	MIN. INLET SIZE IN.	REMARKS
					HTG. CAPACITY BTU/HR	GPM	MAX. PRESSURE DROP, FT. W.C.			
VAVR-100	CLASSROOM	2400	780	420	29,876	4.0	0.7	16	16	-
VAVR-101	CLASSROOM	2400	780	420	29,876	4.0	0.7	16	16	-
VAVR-102	CLASSROOM	2400	780	420	29,876	4.0	0.7	16	16	-
VAVR-103	CLASSROOM	2900	915	500	32,176	4.3	0.7	24x16	24x16	-

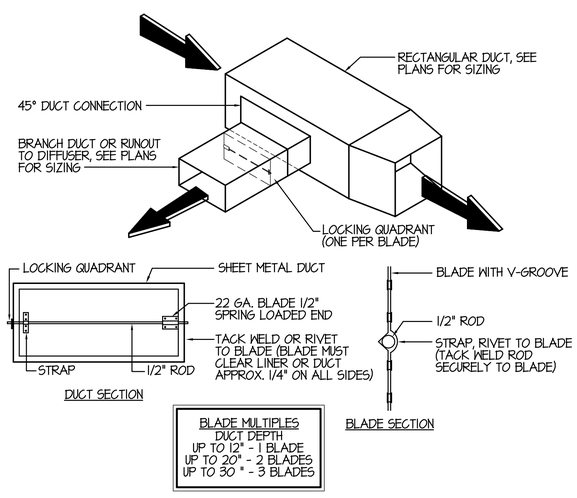

BRANCH DUCT AND DAMPER DETAIL (1 / M-001)
SCALE: NONE

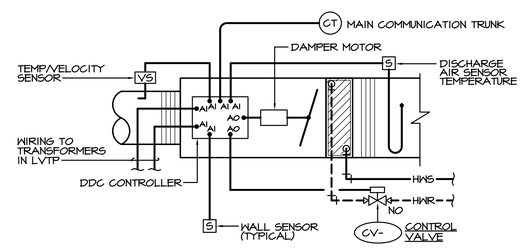

VAV COOLING WITH TERMINAL REHEAT DIAGRAM

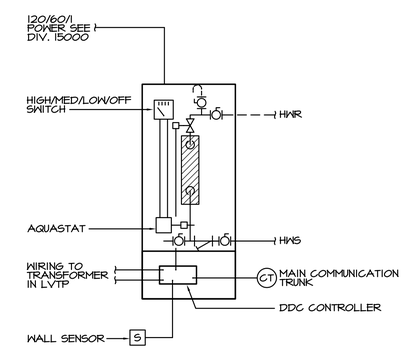

CABINET HEATER CONTROL DIAGRAM

GENERAL NOTES:

1. NEW CONTROLS SHALL BE COMPATIBLE WITH EXISTING DDC CONTROLS.
2. CONNECT NEW CONTROLS TO EXISTING DDC CONTROLS AND PROGRAM TO RECOGNIZE AND IDENTIFY NEW SYSTEMS.
3. PROVIDE CONTROL TRANSFORMERS AS REQUIRED.
4. CONTROL VALVES SHALL BE SIZED AT 5 FT. MAX. PRESSURE DROP.

State of Utah
Department of Administrative Services
Division of Facilities Construction & Management
4110 State Office Building
Salt Lake City, Utah 84114
Phone: (801) 538 - 3018
Fax: (801) 538 - 3267
Internet: http://www.dfcm.state.ut.us

CREATED BY: P+A architects

P+A architects
821 East Kensington Ave.
Salt Lake City, Utah 84105
P: 801.484.1161
F: 801.485.4640
e-mail parchitects@comcast.net

ARCHITECTURE PLANNING DESIGN

BUILDING NAME:

SNOW COLLEGE SOUTH - SEVIER VALLEY CENTER

PROJECT TITLE:

SEVIER VALLEY CENTER REMODEL

MARK	DATE	DESCRIPTION

ISSUE TYPE: CONSTRUCTION DOCUMENTS

ISSUE DATE: JUNE 16, 2005

DFCM PROJECT NO: 04001310
CAD PROJECT NO: 2005-05
CAD DWG FILE:
DRAWN BY: JTB
CHK'D BY: LDV

COPYRIGHT: STATE OF UTAH

SHEET TITLE

MECHANICAL EQUIPMENT SCHEDULES AND CONTROL DIAGRAMS

SHEET NUMBER

M-001

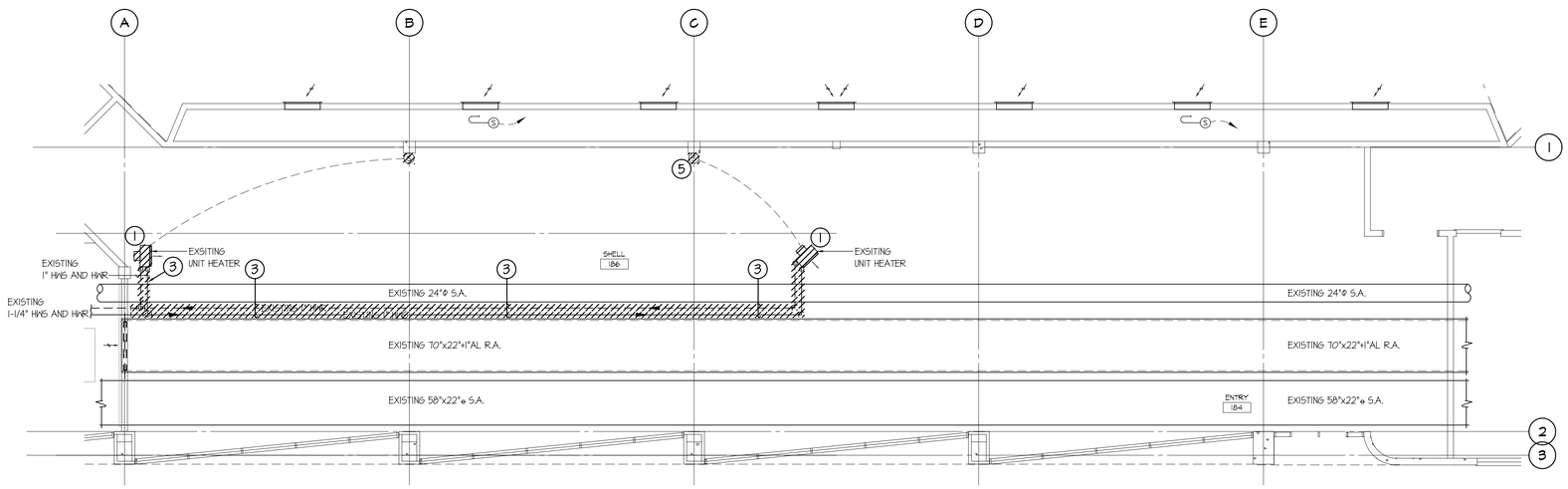

PARTIAL FIRST LEVEL MECHANICAL DEMOLITION PLAN

SCALE: 1/8" = 1'-0"

10 5 0 10 20

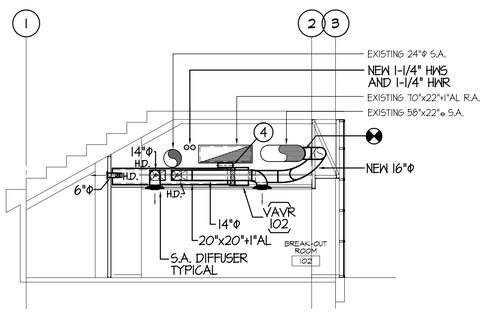

MECHANICAL SECTION

A M-101

SCALE: 1/8" = 1'-0"

10 5 0 10 20

DRAWING NOTES

1. REMOVE EXISTING UNIT HEATER. RETURN UNIT HEATER TO OWNER.
2. NOT USED.
3. REMOVE PORTION OF EXISTING HEATING WATER PIPING.
4. 32"x20" R.A. DUCT OPENING WITH DAMPER.
5. REMOVE EXISTING SENSOR AND WIRING COMPLETE.
6. R-1 22"x22" NK., R.A. GRILLE WITH SOUND BOOT.
7. S-1 600 CFM, 12"Φ NK., S.A. DIFFUSER.
8. NEW SENSOR.
9. S-2 500 CFM, 14"x14" S.A. GRILLE.
10. TRANSITION FROM 12"Φ TO 14"x14" S.A. GRILLE.
11. NEW 1" HWS AND 1" HWR PIPING.
12. R-2 12"x8" NK., R.A. GRILLE WITH SOUND BOOT IN ADJACENT ROOM CEILING SPACE.
13. TIGHTEN HANGERS TO RAISE EXISTING S.A. DUCT TO ALLOW ROOM FOR TAKE-OFFS TO FIT BENEATH.
14. S-2 100 CFM, 12"x8" S.A. GRILLE.

FIRE PROTECTION NOTES

A. CONTRACTOR TO FIELD VERIFY EXISTING CONDITIONS PRIOR TO CREATING SHOP DRAWINGS.

B. PROVIDE MODIFICATIONS AS NOTED AND AS REQUIRED TO MAINTAIN COMPLETE COVERAGE PER NFPA 13 AND DFCM CRITERIA.

C. CONTRACTOR TO WORK ONLY FROM APPROVED PLANS. PLANS SHALL BE APPROVED BY OWNER, OWNERS INSURANCE, ENGINEER AND RICHFIELD CITY FIRE DEPARTMENT REPRESENTATIVE.

MODIFY EXISTING FIRE SPRINKLER SYSTEM PIPING AS REQUIRED TO PROVIDE COMPLETE COVERAGE PER NFPA 13 IN ALL REMODELED AREAS. PROVIDE NEW SPRINKLER HEADS IN AREAS WITH NEW CEILING PER THE SPECIFICATION.

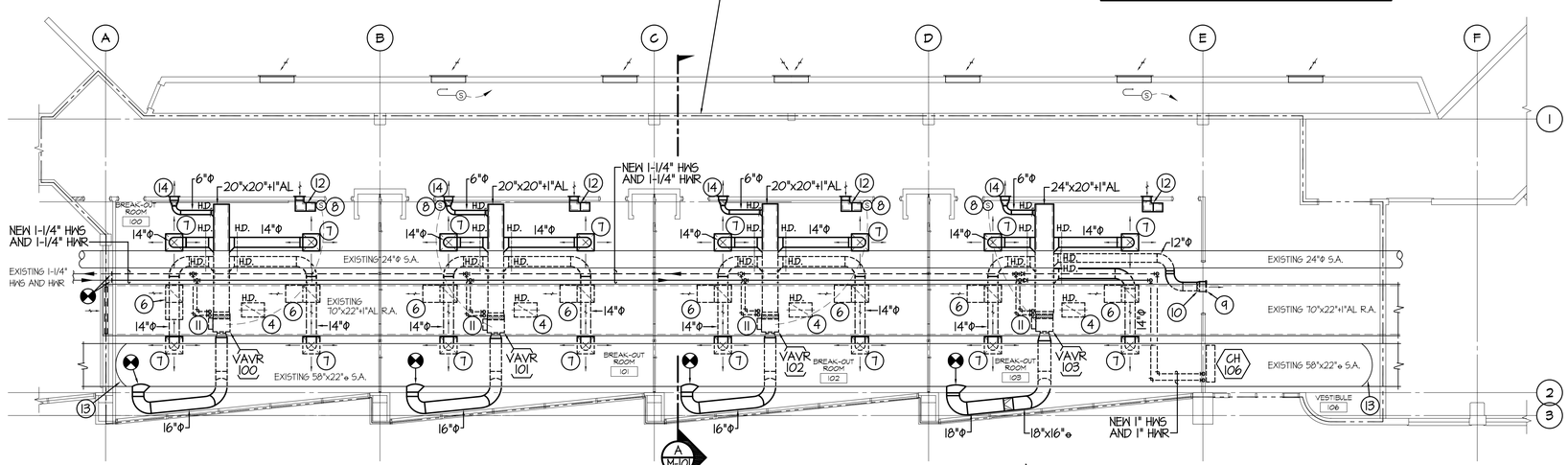

PARTIAL FIRST LEVEL MECHANICAL REMODEL PLAN

SCALE: 1/8" = 1'-0"

10 5 0 10 20

State of Utah
Department of Administrative Services

Division of Facilities Construction & Management
4110 State Office Building
Salt Lake City, Utah 84114
Phone: (801) 538 - 3018
Fax: (801) 538 - 3267

Internet: http://www.dfcm.state.ut.us

CREATED BY: P+A architects

P+A architects
821 East Kensington Ave.
Salt Lake City, Utah 84105
P: 801.484.1161
F: 801.485.4640
e-mail parchitects@comcast.net

ARCHITECTURE PLANNING DESIGN

BUILDING NAME:

SNOW COLLEGE SOUTH - SEVIER VALLEY CENTER

PROJECT TITLE:

SEVIER VALLEY CENTER REMODEL

MARK	DATE	DESCRIPTION

ISSUE TYPE: CONSTRUCTION DOCUMENTS

ISSUE DATE: JUNE 16, 2005

DFCM PROJECT NO: 04001310
CAD PROJECT NO: 2005-05
CAD DWG FILE:
DRAWN BY: JTB
CHK'D BY: LDV

COPYRIGHT: STATE OF UTAH

SHEET TITLE

PARTIAL MECHANICAL DEMOLITION AND REMODEL PLANS

SHEET NUMBER

M-101

I:\WorkAcad\4149\MECH\SHEET\4149-M-101.dwg, 7/6/2005 5:41:31 PM, Heath Engineering Co.pb

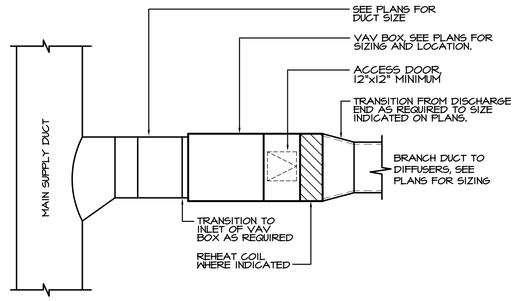

VAV BOX DETAIL

SCALE: NONE — 9 / M501

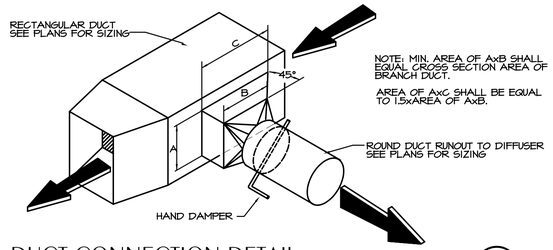

DUCT CONNECTION DETAIL

SCALE: NONE — 5 / M501

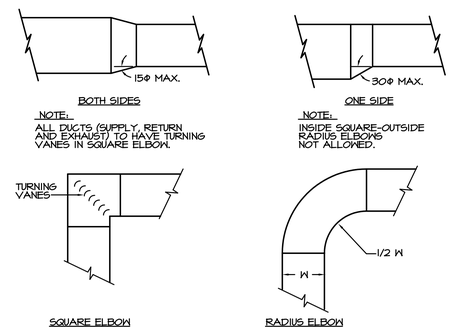

RECTANGULAR DUCT FITTINGS

SCALE: NONE — 1 / M501

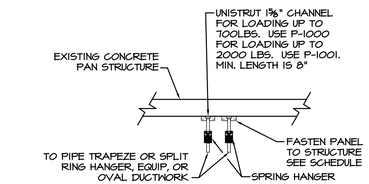

FASTENER REQUIREMENTS

STRUCTURE TYPE	LOADING	FASTENER
CONCRETE	UP TO 400 LBS.	2-HILTI DS POWER ACUATED FASTENERS W/ ¾" PENETRATION
CONCRETE	400-4000 LBS.	2-½" DIA. HILTI KWIK BOLT II W/ 3½" EMBED.

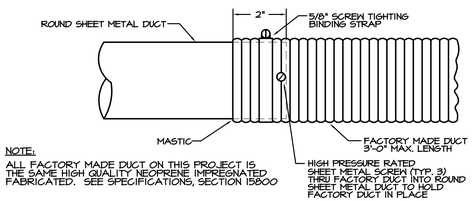

NOTE:
ALL FACTORY MADE DUCT ON THIS PROJECT IS THE SAME HIGH QUALITY NEOPRENE IMPREGNATED FABRICATED. SEE SPECIFICATIONS, SECTION 15800

FACTORY MADE DUCT DETAIL

SCALE: NONE — 6 / M501

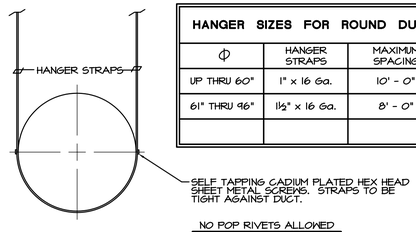

HANGER SIZES FOR ROUND DUCT		
Φ	HANGER STRAPS	MAXIMUM SPACING
UP THRU 60"	1" x 16 Ga.	10' - 0"
61" THRU 96"	1½" x 16 Ga.	8' - 0"

DUCT HANGER DETAIL

SCALE: NONE — 2 / M501

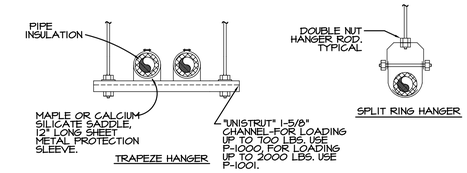

PIPE SIZE	MAX. SPACING	PIPE LOAD WEIGHT/FT. TOTAL	ROD SIZE
1" AND SMALLER	8	2.5/20	3/8"
1-1/4" - 2"	10	6/60	3/8"
2-1/2" - 4"	12	20/240	5/8"
5" - 8"	16	50/800	7/8"
10" - 12"	20	100/2000	7/8"
14"	20	126/2522	7/8"

HANGERS SIZES AND SPACING ARE FOR SINGLE PIPES. HANGER ROD LOADING FOR TRAPEZE HANGERS SHALL NOT EXCEED THE TOTAL LOADING INDICATED. IF SMALLER ROD SIZE IS USED, DECREASE MAXIMUN SPACING SO THAT TOTAL LOADING IS NOT EXCEEDED.

PIPE HANGER DETAIL

SCALE: NONE — 10 / M501

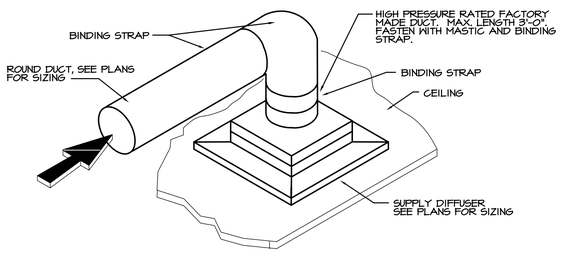

DUCT CONNECTION TO DIFFUSER

SCALE: NONE — 7 / M501

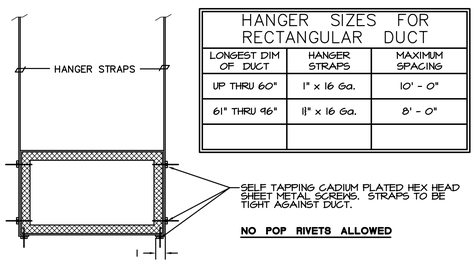

HANGER SIZES FOR RECTANGULAR DUCT		
LONGEST DIM OF DUCT	HANGER STRAPS	MAXIMUM SPACING
UP THRU 60"	1" x 16 Ga.	10' - 0"
61" THRU 96"	1½" x 16 Ga.	8' - 0"

DUCT STRAP HANGER DETAIL

SCALE: NONE — 3 / M501

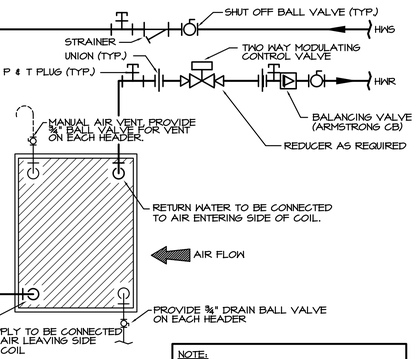

NOTE:
UNIT HEATER AND CABINET HEATER PIPING AND VALVING SIMILAR.

2-WAY HEATING COIL PIPING SCHEMATIC

SCALE: NONE — RE-HEAT COIL PIPING — 11 / M501

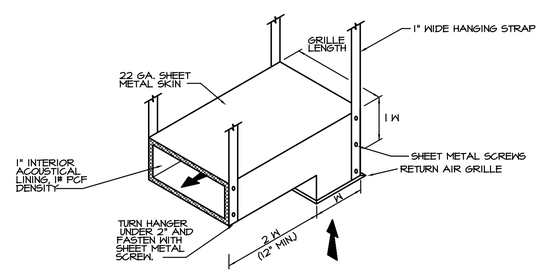

SOUND TRAP DETAIL

SCALE: NONE — 8 / M501

METAL FASTENERS:
OMARK INSUL-PINS, DURA DYNE FASTENERS OR GRIP NAILS.
GRIP NAILS SHALL BE INSTALLED BY "GRIP NAIL AIR HAMMER" OR BY "AUTOMATIC FASTENER EQUIPMENT".

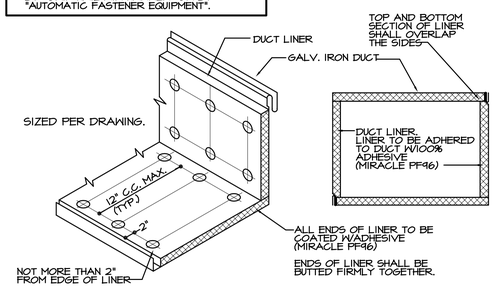

DUCT LINER DETAIL

SCALE: NONE — 4 / M501

State of Utah
Department of Administrative Services
Division of Facilities Construction & Management
4110 State Office Building
Salt Lake City, Utah 84114
Phone: (801) 538 - 3018
Fax: (801) 538 - 3267
Internet: http://www.dfcm.state.ut.us

CREATED BY: P+A architects

P+A architects
821 East Kensington Ave.
Salt Lake City, Utah 84105
P: 801.484.1161
F: 801.485.4640
e-mail parchitects@comcast.net

ARCHITECTURE PLANNING DESIGN

BUILDING NAME:

SNOW COLLEGE SOUTH - SEVIER VALLEY CENTER

PROJECT TITLE:

SEVIER VALLEY CENTER REMODEL

MARK	DATE	DESCRIPTION

ISSUE TYPE: CONSTRUCTION DOCUMENTS

ISSUE DATE: JUNE 16, 2005

DFCM PROJECT NO: 04001310
CAD PROJECT NO: 2005-05
CAD DWG FILE:
DRAWN BY: JTB
CHK'D BY: LDV

COPYRIGHT: STATE OF UTAH

SHEET TITLE

MECHANICAL DETAILS

SHEET NUMBER

M-501

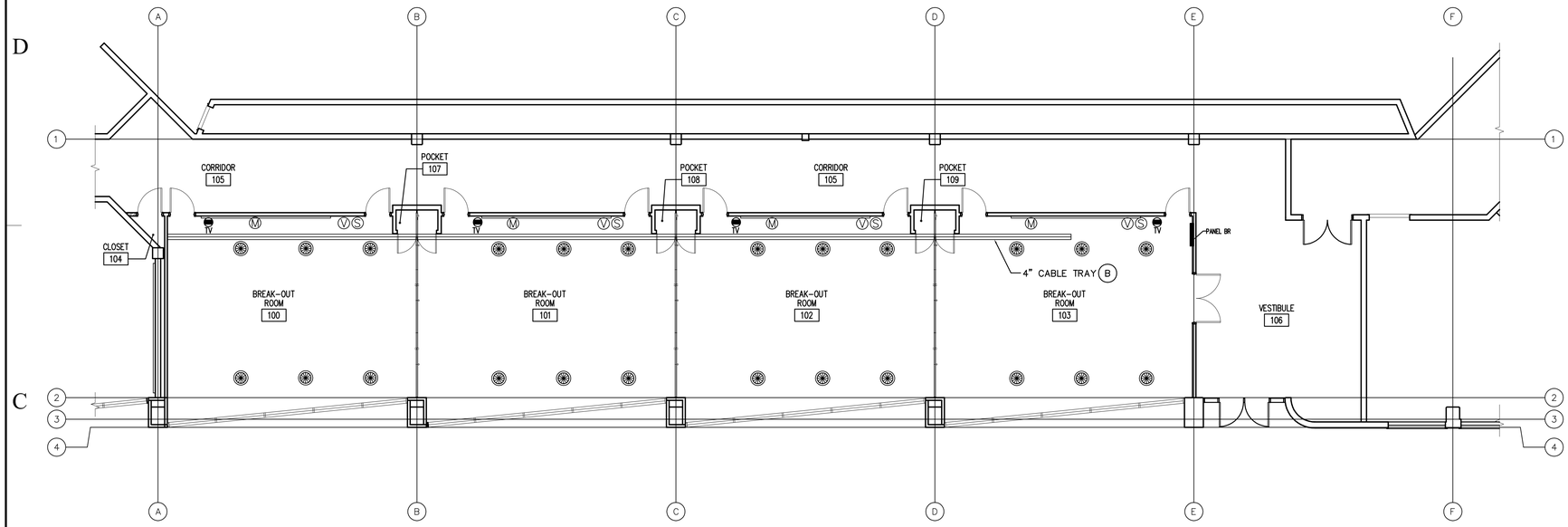

02 / EL101 AUDIO/VISUAL SYSTEM

SCALE 1/8" = 1'-0"

PLAN NORTH

0 4' 8' 16'

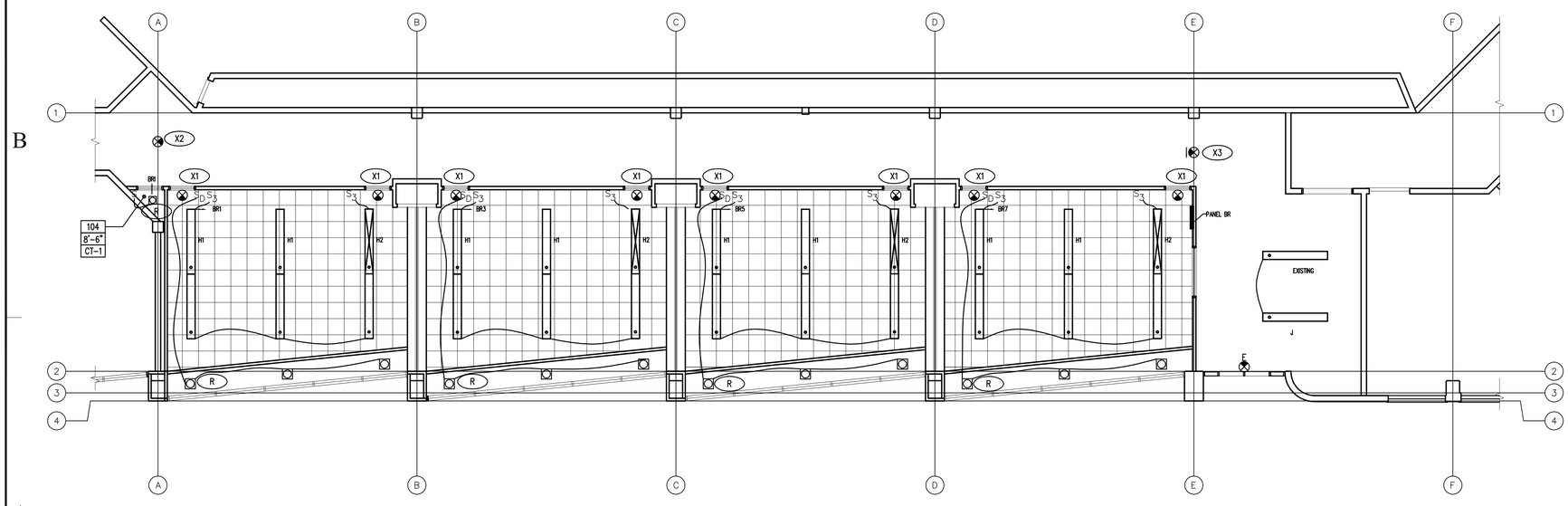

01 / EL101 LIGHTING PLAN

SCALE 1/8" = 1'-0"

PLAN NORTH

0 4' 8' 16'

LEGEND			
SYMBOL	DESCRIPTION	SYMBOL	
	ONE CIRCUIT, TWO WIRE HOME RUN TO PANEL		XXXXX
	CABLE TRAY		ABOVE CL
	RECESSED DOWNLIGHT FIXTURE		CEILING
	FLOORESCENT LIGHT FIXTURE		+90"
	FLOORESCENT EGRESS LIGHT FIXTURE		+90"
	CEILING MOUNTED EXIT LIGHT		CEILING
$	SINGLE POLE SWITCH		+4'-0"
$D	SINGLE POLE DIMMER SWITCH		+4'-0"
$3	THREE-WAY SWITCH		+4'-0"
	DUPLEX RECEPTACLE		+16"
	RECEPTACLE IN CEILING		CEILING
TV	TELEVISION OUTLET		+90"
	TELEPHONE/DATA OUTLET		+16"
	CLASSROOM DATA "HUB" (PROVIDE J-BOX IN WALL)		+12"
	PANEL BOARD		TOP AT +6'-0"
H	FIRE ALARM SIGNAL SPEAKER/STROBE		+6'-8"
A	LIGHT FIXTURE (LETTER DESIGNATES TYPE)		XXXXX
	SPEAKERS		CEILING
S	AUDIO SWITCH		+4'-0"
V	VOLUME CONTROL		+4'-0"
M	MICROPHONE		+16"

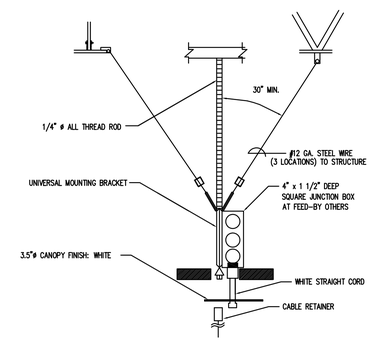

A PENDANT MOUNTING DETAIL

SCALE NTS

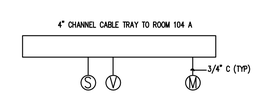

B SOUND SYSTEM DETAIL

SCALE NTS

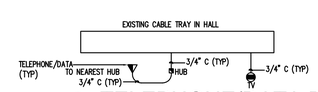

C TELEPHONE/DATA DETAIL

SCALE NTS

State of Utah
Department of Administrative Services

Division of Facilities Construction & Management
4110 State Office Building
Salt Lake City, Utah 84114
Phone: (801) 538 - 3018
Fax: (801) 538 - 3267

Internet: http://www.dfcm.state.ut.us

CREATED BY: P+A architects

P+A architects
821 East Kensington Ave.
Salt Lake City, Utah 84105
P: 801.484.1161
F: 801.485.4640
e-mail parchitects@comcast.net

ARCHITECTURE PLANNING DESIGN

BUILDING NAME:

SNOW COLLEGE SOUTH - SEVIER VALLEY CENTER

PROJECT TITLE:

SEVIER VALLEY CENTER REMODEL

MARK	DATE	DESCRIPTION

ISSUE TYPE: CONSTRUCTION DOCUMENTS

ISSUE DATE: JULY 6, 2005

DFCM PROJECT NO: 05001710
CAD PROJECT NO: 2005-05
CAD DWG FILE:
DRAWN BY: WWW AND MC
CHK'D BY: CECELIA BYTHEWAY

COPYRIGHT: STATE OF UTAH

SHEET TITLE

AUDIO/VISUAL PLAN AND LIGHTING PLAN

SHEET NUMBER

EL-101

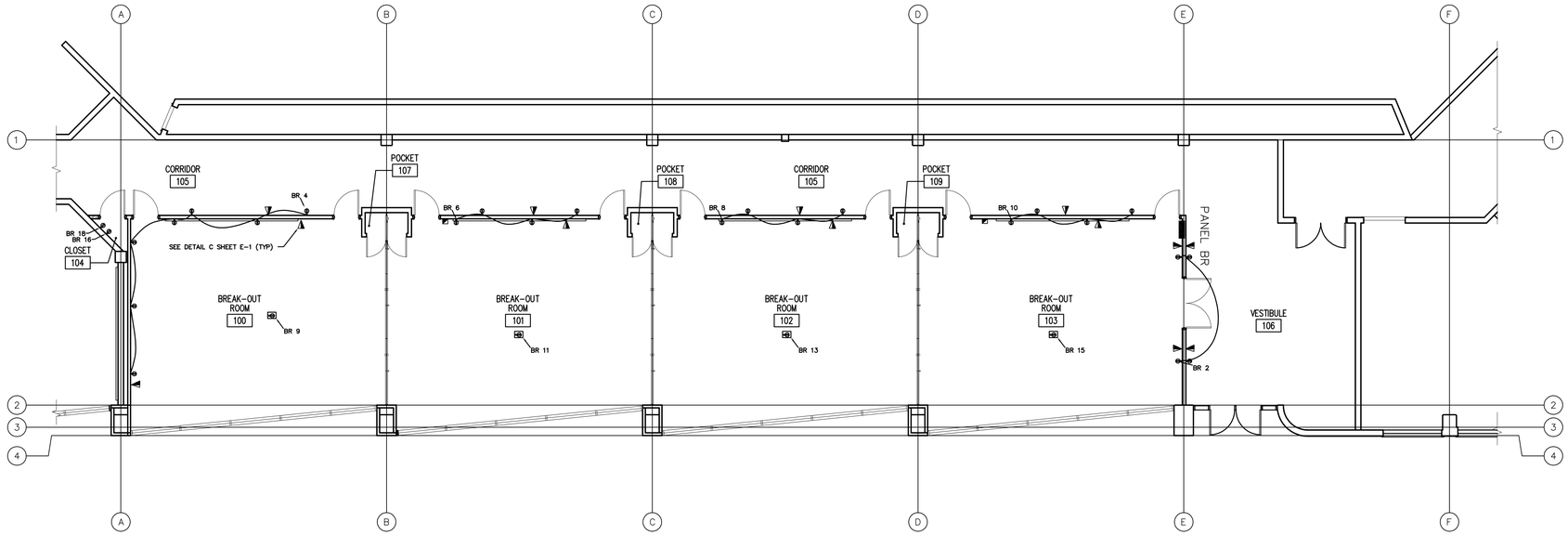

PLAN NORTH

01 EP102 DATA/TELEPHONE AND POWER PLAN

SCALE 1/8" = 1'-0"

0 4' 8' 16'

LIGHT FIXTURE SCHEDULE

FIXT. TYPE	# TO BE INSTALLED	MANUFACTURER	CATALOG #	VOLTS	LAMPS/ FIXTURE	LAMPS SIZE	WATTS	MOUNTING	REMARKS
H1	8	PEERLES ENVISION	ENM4-332-16FT-R8-120-GEB-X-X-SCT-F1-12-C200-GLR	120	3	32 W T8	93 W PER 4FT	Pendant hung	3 light fluorescent, indirect/direct fixture
H2	4	PEERLES ENVISION	ENM4-332-16FT-R8-120-GEB-1SE-EL-SCT-F1-12-C200-GLR	120	3	32 W T8	93 W PER 4FT	Pendant hung	3 light fluorescent, indirect/direct fixture with emergency lighting
R	13	LITHONIA	R7-AC-LD	120	1	100 PAR	100 W	Recessed, Ceiling	recessed downlight
J	1	LITHONIA	TAF-10-2-32-277-1/4-GLR	277	4	F32T8	114 W	Chain Hung, from ceiling	4 light fluorescent, additional light in vestible, rm. 106
X1	8	LITHONIA	LRP-W-1-GC-X-120/277	120	1	LED INCLUDED	2.4 W	Back mount	Classroom exit sign
X2	1	LITHONIA	LRP-W-2-GC-X-120/277	120	1	LED INCLUDED	2.4 W	Top mount	Exit sign
X3	1	LITHONIA	LRP-W-2-GC-RA-120/277	120	1	LED INCLUDED	2.4 W	Top mount	Exit sign

MAIN BUS 50 AMPS

PANEL BR

120/208 Volts
Three Phase
10,000 AIC

WIRE SIZE	CIRCUIT DESCRIPTION	POLE#	BRK. SIZE	A	C	B	BRK. SIZE	POLE#	CIRCUIT DESCRIPTION	WIRE SIZE
#12CU	LIGHTS ROOM 100	1	20A	13		6	20A	2	WALL OUTLETS VESTIBLE ROOM 106	#12CU
#12CU	LIGHTS ROOM 101	3	20A		12/8		20A	4	OUTLETS-ROOM 100 AND HALL	#12CU
#12CU	LIGHTS ROOM 102	5	20A	8		12	20A	6	OUTLETS-ROOM 101 AND HALL	#12CU
#12CU	LIGHTS ROOM 103	7	20A	12		8	20A	8	OUTLETS-ROOM 102 AND HALL	#12CU
#12CU	CEILING OUTLET ROOM 100	9	20A		3/8		20A	10	OUTLETS-ROOM 103 AND HALL	#12CU
#12CU	CEILING OUTLET ROOM 101	11	20A	5		3	20A	12	OUTLETS-ROOM 104A	#12CU
#12CU	CEILING OUTLET ROOM 102	13	20A	3		5	20A	14	OUTLETS-ROOM 104A	#12CU
#12CU	CEILING OUTLET ROOM 103	15	20A		3		20A	16	SPARE	#12CU
		17					20A	18	SPARE	#12CU
		19						20		
	Total Amps			41	34	34				

ONE-LINE DIAGRAM

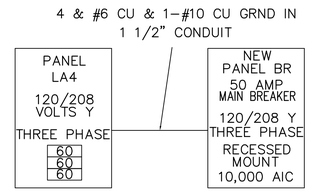

INSTALL NEW THREE PHASE
60 AMP BREAKER IN PANEL
LA4 & CONDUCTORS TO NEW
PANEL BR.

LEGEND

SYMBOL	DESCRIPTION	SYMBOL
	ONE CIRCUIT, TWO WIRE HOME RUN TO PANEL	XXXXX
	CABLE TRAY	ABOVE CL
	RECESSED DOWNLIGHT FIXTURE	CEILING
	FLOORESCENT LIGHT FIXTURE	+90"
	FLOORESCENT EGRESS LIGHT FIXTURE	+90"
	CEILING MOUNTED EXIT LIGHT	CEILING
$	SINGLE POLE SWITCH	+4'-0"
$D	SINGLE POLE DIMMER SWITCH	+4'-0"
$3	THREE-WAY SWITCH	+4'-0"
	DUPLEX RECEPTACLE	+16"
	RECEPTACLE IN CEILING	CEILING
TV	TELEVISION OUTLET	+90"
	TELEPHONE/DATA OUTLET	+16"
	CLASSROOM DATA "HUB" (PROVIDE J-BOX IN WALL)	+12"
	PANEL BOARD	TOP AT +6'-0"
H	FIRE ALARM SIGNAL SPEAKER/STROBE	+6'-8"
A	LIGHT FIXTURE (LETTER DESIGNATES TYPE)	XXXXX
	SPEAKERS	CEILING
S	AUDIO SWITCH	+4'-0"
V	VOLUME CONTROL	+4'-0"
M	MICROPHONE	+16"

GENERAL NOTES

1. ALL ELECTRICAL WORK SHALL BE PERFORMED IN STRICT ACCORDANCE WITH THE NATIONAL ELECTRIC CODE AND ALL EQUIPMENT MUST BE UL AND NEMA LISTED.
2. VERIFY ALL DIMENSIONS PRIOR TO CONSTRUCTION.
3. ALL CONFLICTS OR QUESTIONS MUST BE BROUGHT TO THE ATTENTION OF THE ELECTRIC ENGINEER PRIOR TO BIDDING.
4. ELECTRICAL WORK THAT IS JUDGED SLOPPY BY THE ENGINEER OR ARCHITECT, SHALL BE REMOVED AND REPLACED AT THE ELECTRICAL CONTRACTOR'S EXPENSE, AT NO EXTRA COST TO OWNER.
5. FOR POWER SOUCE, USE PNAEL LA4 IN ELECTRICAL ROOM 181 LOCATED NORTH OF THE REMODEL AREA. PANEL LA4 IS 120/208Y, THREE PHASE, 95 AMPS. INSTALL NEW 60 AMP, THREE PHASE CIRUIT BREAKER.
6. PANEL BR TO OPEN INTO VESTIBLE, ROOM 106. PROVIDE WITH LOCKING DOOR AND TYPEWRITTEN CIRCUIT DIRECTORY.
7. RECEPTACLES AND SWITCHES SHALL BE COMMERCIAL GRADE, 120/277 VOLT WITH SCREW-TYPE TREMINALS. COLOR: WHITE WITH STAINLESS STEEL PLATE COVERS. SWITCHES SHALL BE QUIET TYPE. WHERE MORE THAN ONE SWITCH IS SHOWN, INSTALL SWITCHES IN A PROPER ORDER.
8. ALL CONDUCTORS SHALL BE THWN OR THHN, 600 VOLT, COPPER.
9. CONDUIT SHALL BE IMC OR EMT AND CONCEALED IN WALLS AND CEILINGS. EXPOSED RUNS OR CONDUIT SHALL HAVE SUPPORTS SPACED NOT MORE THAN 5 FEET APART. CONDUIT THAT HAS BEEN CRUSHED OR DEFORMED SHALL NOT BE INSTALLED.
10. CAREFULLY PERFORM ALL WORK WHERE CUTTING OR DRILLING OF WALLS IS NECESSARY. ANY DAMAGE TO BUILDING SHALL BE REPAIRED. SEAL AROUND ALL CONDUITS WITH FIREPROOF CAULKING WHERE THEY PASS THROUGH FIREWALLS.
11. JUNCTION BOXES AND OUTLET BOXES FOR RECEPTACLES, SWITCHES, TELEPHONES/DATA, FIRE ALARMS, TELEVISION AND OTHER ELECTICAL DEVICES SHALL BE MOUNTED FLUSH IN WALLS, WITH CONDUIT CONCEALED IN WALLS.
12. SEE LIGHT FIXTURE SCHEDULE FOR TYPE, MOUNTING AND WATTAGE.
13. HEIGHT OF RECEPTABLE, TELEPHONE/DATA. TELEVISION AND FIRE ALARM SIGNAL BOXES SHALL BE MEASURED TO BOTTOM OF THE BOX FROM THE FINISHED FLOOR. SEE ELECTICAL SYMBOL SCHEDULE.
14. EXTEND TELEPHONE/DATA CONDUIT TO "HUB" LOCATION. TELEPHONE/DATA "HUB. PROVIDE WALL J-BOX 12" AFF AT HUB.
15. RUN 3/4" CONDUIT TO EXISTING CABLE TRAY IN HALL FROM EACH TELEPHONE/DATA HUB OR T.V. OUTLET. SEE TELEPHONE/DATA DETAIL. CONDUIT SHALL BE CONCEALED IN WALL. INSTALL STRING FOR PULLING CABLES IN ALL 3/4" TELEPHONE/DATA AND T.V. CONDUITS.
16. FURNISH AND INSTALL 4" CHANNEL CABLE TRAY FOR AUDIO SYSTEM WIRING TO ROOM 104A. SUPPORT WITH CENTER-MOUNTED HANGING SUPPORT. INSTALL TO NEMA VE-1 STANDARDS. RUN 3/4" CONDUIT FROM AUDIO OUTLET BOXES TO 4" CHANNEL CABLE TRAY. INTALL STRING FOR PULLING CABLES IN ALL 3/4" AUDIO CONDUITS.
17. FURNISH BACKBOARD FOR AUDIO SYSTEM IN ROOM 104A.
18. FURNISH WHEELOCK FIRE ALARM HORN/STROBE TO MATCH EXISTING FIRE ALARM SYSTEM FOR EACH ROOM. INSTALL CONDUCTORS IN 3/4" CONDUIT TO FIRE ALARM CONTROL PANEL. MAKE ARRANGEMENTS FOR CONNECTION INTO EXISTING FIRE ALARM CONTROL PANEL.
19. CONNECT EXIT LIGHTS INTO NEAREST UNSWITCHED CIRCUIT.

State of Utah
Department of Administrative Services

Division of Facilities Construction & Management
4110 State Office Building
Salt Lake City, Utah 84114
Phone: (801) 538 - 3018
Fax: (801) 538 - 3267

Internet: http://www.dfcm.state.ut.us

CREATED BY: P+A architects

P+A architects
821 East Kensington Ave.
Salt Lake City, Utah 84105
P: 801.484.1161
F: 801.485.4640
e-mail parchitects@comcast.net

ARCHITECTURE PLANNING DESIGN

BUILDING NAME:

SNOW COLLEGE SOUTH - SEVIER VALLEY CENTER

PROJECT TITLE:

SEVIER VALLEY CENTER REMODEL

MARK	DATE	DESCRIPTION

ISSUE TYPE: CONSTRUCTION DOCUMENTS

ISSUE DATE: JULY 6, 2005

DFCM PROJECT NO: 05001710
CAD PROJECT NO: 2005-05
CAD DWG FILE:
DRAWN BY: WWW AND MC
CHK'D BY: CECELIA BYTHEWAY

COPYRIGHT: STATE OF UTAH

SHEET TITLE

DATA/TELEPHONE AND POWER PLAN

SHEET NUMBER

EP-102

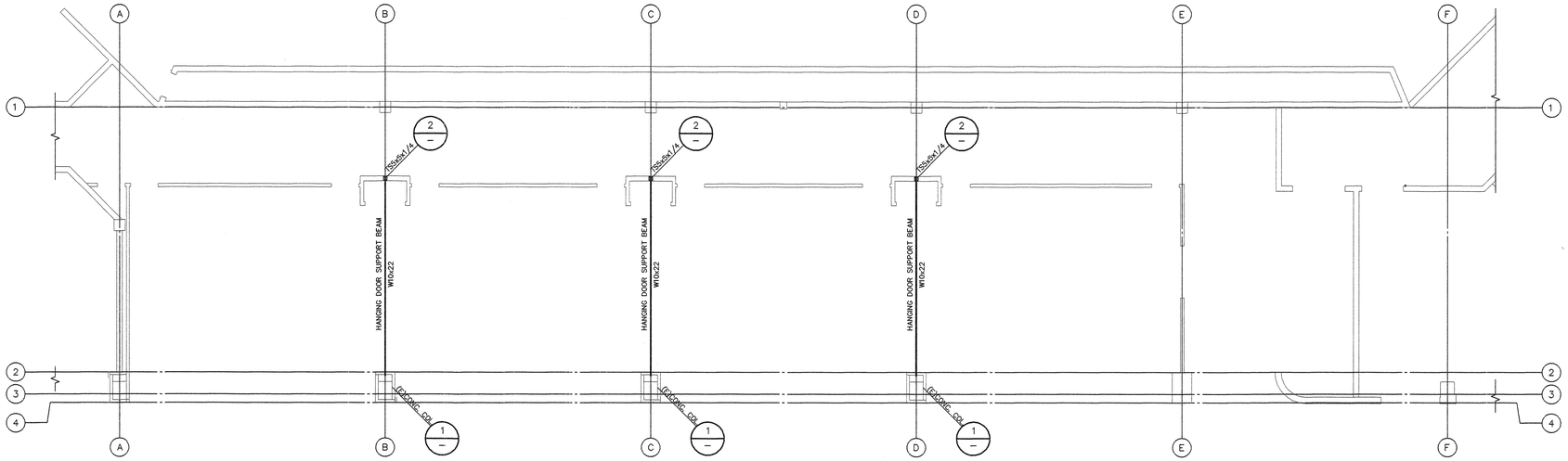

02 AFP101 FRAMING PLAN
SCALE 1/8" = 1'-0"
PLAN NORTH
0 4' 8' 16'

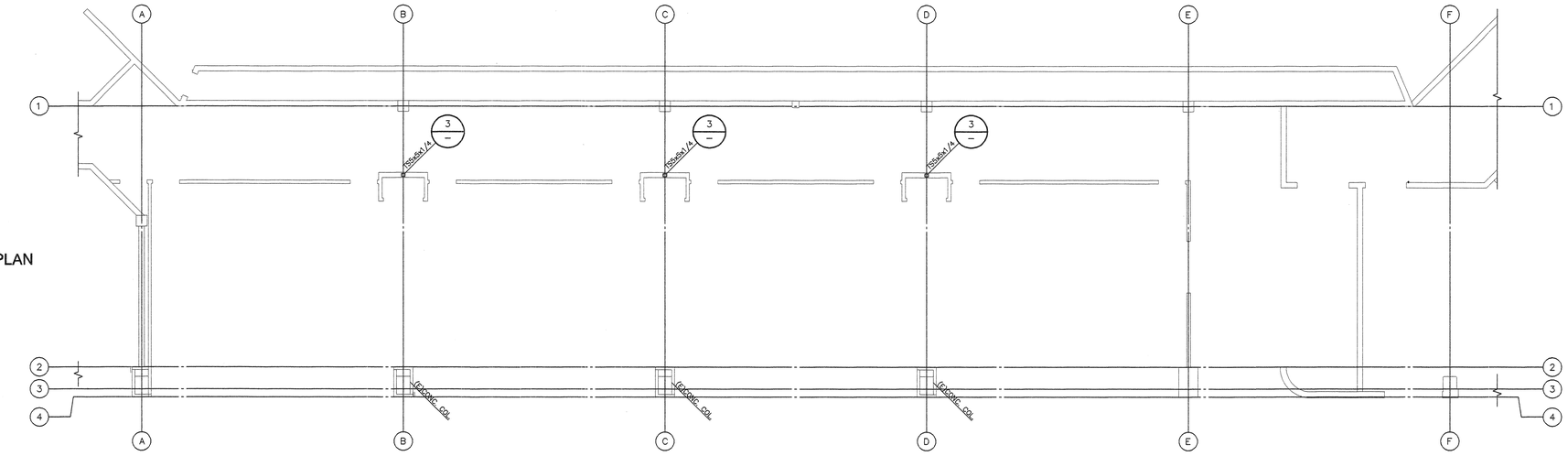

02 AFP101 FOUNDATION PLAN
SCALE 1/8" = 1'-0"
PLAN NORTH
0 4' 8' 16'

GENERAL STRUCTURAL NOTES:

I. DESIGN CRITERIA:

A. BUILDING CODE: 2003 INTERNATIONAL BUILDING CODE (IBC) W/ AMENDMENTS
B. LOADINGS:

1. HANGING DOOR WEIGHT = 10 PSF
2. TYPICAL LATERAL LOAD = 5 PSF

II. STRUCTURAL AND MISCELLANEOUS STEEL:

A. MATERIAL PROPERTIES:

1. ALL SHAPES, PLATES, ANGLES, AND CHANNELS TO BE ASTM A-36 UNLESS NOTED OTHERWISE.

B. WELDING:

1. FOR STRUCTURAL STEEL TO BE IN ACCORDANCE WITH A.W.S. REQUIREMENTS FOR E70XX ELECTRODES.

C. BOLTS:

1. WF BEAM – A50, TS COLUMN – A46.
2. ALL BOLTS TO BE 3/4" DIAMETER ASTM A 325-N UNLESS NOTED OTHERWISE.
3. BOLTS, NUTS AND WASHERS SHALL NOT BE REUSED.
4. ANCHOR BOLTS SHALL BE ASTM A 307 OR A 36.

III. SPECIAL INSPECTION: SPECIAL INSPECTION IS REQUIRED IN ACCORDANCE WITH I.B.C. SECTION 1701.

A. FIELD WELDING.

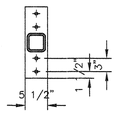

PLAN–CONT.

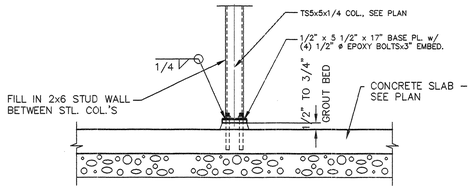

3

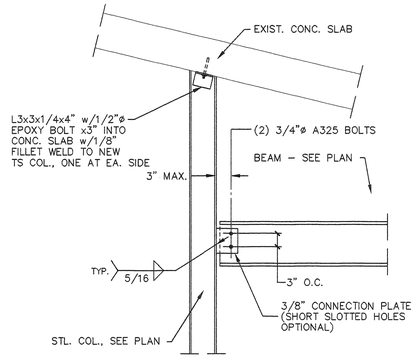

2

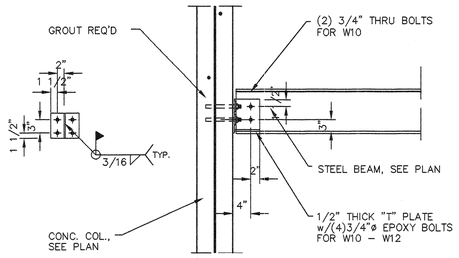

1

State of Utah
Department of Administrative Services
Division of Facilities Construction & Management
4110 State Office Building
Salt Lake City, Utah 84114
Phone: (801) 538 - 3018
Fax: (801) 538 - 3267
Internet: http://www.dfcm.state.ut.us

CREATED BY: P+A architects

P+A architects
821 East Kensington Ave.
Salt Lake City, Utah 84105
P: 801.484.1161
F: 801.485.4640
e-mail parchitects@comcast.net
ARCHITECTURE PLANNING DESIGN

BUILDING NAME:

SNOW COLLEGE SOUTH-SEVIER VALLEY CENTER

LICENSED PROFESSIONAL ENGINEER No. 260129 HUA SHEN STATE OF UTAH

PROJECT TITLE:

SERVIER VALLEY CENTER REMODEL

MARK	DATE	DESCRIPTION
REV. 1	9/29/05	COMMENTS & REPLY

ISSUE TYPE: CONSTRUCTION DOCUMENTS

ISSUE DATE: JUNE 15, 2005

DFCM PROJECT NO:
CAD PROJECT NO: SE05137
CAD DWG FILE:
DRAWN BY: BS
CHK'D BY: HS

COPYRIGHT: STATE OF UTAH

SHEET TITLE

SHEET NUMBER

S-GN100

SHEET 12 OF 12

AutoCAD Version: 13_c4
Plot Date: 9/29/05 Plot Time:
Drawing: C:\R13\COM\PROTOS\P12.DWG (9x0)