State of Utah–Department of Administrative Services

DIVISION OF FACILITIES CONSTRUCTION
AND MANAGEMENT

4110 State Office Building/Salt Lake City, Utah 84114/538-3018

NEW HARRISVILLE LIQUOR STORE
DEPARTMENT OF ALCOHOLIC BEVERAGE CONTROL
1455 SOUTH WALL AVENUE, HARRISVILLE, UTAH

DFCM PROJECT NO. 04242030

JANUARY 24, 2006

CONSTRUCTION DRAWINGS

DEED DESCRIPTIONS:

PARCEL 1:
PART OF THE SOUTHWEST QUARTER OF SECTION 8, TOWNSHIP 6 NORTH, RANGE 1 WEST, SALT LAKE BASE AND MERIDIAN, U.S. SURVEY:

BEGINNING AT A POINT ON THE EAST LINE OF WALL AVENUE, NORTH 1636.42 FEET AND WEST 306.7 FEET FROM THE SOUTHEAST CORNER OF SAID QUARTER SECTION; RUNNING THENCE NORTH 0 DEG 54 MIN EAST 70 FEET ALONG EAST LINE OF WALL AVENUE TO GRANTOR'S NORTH PROPERTY LINE; THENCE EAST 150 FEET; THENCE SOUTH 0 DEG 54 MIN WEST 70 FEET PARALLEL TO WALL AVENUE; THENCE WEST 150 FEET TO THE PLACE OF BEGINNING.

PARCEL 2:
PART OF THE SOUTHEAST AND SOUTHWEST QUARTER OF SECTION 8, TOWNSHIP 6 NORTH, RANGE 1 WEST, SALT LAKE MERIDIAN, U.S. SURVEY:

BEGINNING AT A POINT 1561.42 FEET NORTH FROM THE SOUTHEAST CORNER OF THE SOUTHWEST QUARTER OF SAID SECTION 8; RUNNING THENCE WEST 306.7 FEET TO THE EAST LINE OF WALL AVENUE; THENCE NORTH 0 DEG 54 MIN EAST 75 FEET; THENCE EAST 150 FEET; THENCE NORTH 0 DEG 54 MIN EAST 70 FEET; THENCE EAST 100 FEET; THENCE SOUTH 75 FEET; THENCE EAST 206.7 FEET; THENCE SOUTH 70 FEET; THENCE WEST 149.3 FEET TO BEGINNING.

PARCEL 3:
PART OF THE SOUTHEAST AND SOUTHWEST QUARTER OF SECTION 8, TOWNSHIP 6 NORTH, RANGE 1 WEST, SALT LAKE BASE & MERIDIAN, U S SURVEY;

BEGINNING AT A POINT 1843.42 FEET NORTH AND 57.7 FEET WEST FROM THE SOUTHEAST CORNER OF THE SOUTHWEST QUARTER OF SAID SECTION 8, RUNNING THENCE SOUTH 0 DEG 54 MIN WEST 212 FEET, THENCE EAST 140 FEET, THENCE NORTH 0 DEG 54 MIN EAST 212 FEET THENCE WEST TO POINT OF BEGINNING. TOGETHER WITH A 48 FOOT RIGHT OF WAY MORE PARTICULARLY DESCRIBED AS FOLLOWS: BEGINNING AT A POINT 1631.42 FEET NORTH AND 200.1 FEET EAST FROM THE SOUTHWEST CORNER OF SAID SECTION 8, TOWNSHIP 6 NORTH, RANGE 1 WEST, RUNNING THENCE WEST 125.27 FEET, THENCE NORTH 0 DEG 54 MIN EAST 48 FEET, THENCE EAST 115.5 FEET, THENCE SOUTH 11 DEG 12 MIN EAST 48.27 FEET TO THE POINT OF BEGINNING.

PARCEL 4:
PART OF THE SOUTHEAST QUARTER OF SECTION 8, TOWNSHIP 6 NORTH, RANGE 1 WEST, SALT LAKE MERIDIAN, U.S. SURVEY:

BEGINNING AT A POINT 1631.42 FEET NORTH 79.1 FEET EAST FROM THE SOUTHWEST CORNER OF SAID SECTION; THENCE NORTH 00 DEG 54 MIN EAST 212.00 FEET, THENCE EAST 176.77 FEET, MORE OR LESS TO THE WEST LINE OF HARRISVILLE ROAD; THENCE SOUTH 24 DEG 57 MIN EAST 142.49 FEET ALONG SAID WEST LINE; THENCE SOUTH 73 DEG 18 MIN WEST 129.2 FEET; THENCE SOUTH 11 DEG 12 MIN EAST 48.27 FEET; THENCE WEST 125.27 FEET TO THE POINT OF BEGINNING.

SURVEY DESCRIPTIONS:

PARCEL 1:
PART OF THE SOUTHWEST QUARTER OF SECTION 8, TOWNSHIP 6 NORTH, RANGE 1 WEST, SALT LAKE BASE AND MERIDIAN, U.S. SURVEY:
BEGINNING AT A POINT ON THE EAST LINE OF WALL AVENUE, NORTH 1636.42 FEET AND WEST 306.06 FEET (306.7 DEED) FROM THE SOUTHEAST CORNER OF SAID QUARTER SECTION; RUNNING THENCE NORTH 0 DEG 54 MIN EAST 70 FEET ALONG EAST LINE OF WALL AVENUE TO GRANTOR'S NORTH PROPERTY LINE; THENCE EAST 150 FEET; THENCE SOUTH 0 DEG 54 MIN WEST 70 FEET PARALLEL TO WALL AVENUE; THENCE WEST 150 FEET TO THE PLACE OF BEGINNING.
CONTAINS: 0.241 ACRES

PARCEL 2 MODIFIED:
BEGINNING AT A POINT NORTH 00°01'25" WEST ALONG THE SECTION LINE 1561.42 FEET FROM THE SOUTHEAST CORNER OF THE SOUTHWEST QUARTER OF SECTION 8, TOWNSHIP 6 NORTH, RANGE 1 WEST, SALT LAKE BASE AND MERIDIAN AND RUNNING THENCE WEST 306.06 FEET; THENCE NORTH 00°54'00" EAST 75.0 FEET; THENCE EAST 150.0 FEET; THENCE NORTH 00°54'00" EAST 70.0 FEET; THENCE EAST 219.26 FEET; THENCE SOUTH 24°58'53" EAST 159.96 FEET; THENCE WEST 133.04 FEET TO THE POINT OF BEGINNING.
CONTAINS: 1.104 ACRES

SURVEYED DESCRIPTION FOR ALTA:

BEGINNING AT A POINT NORTH 00°01'25" WEST ALONG THE SECTION LINE 1561.42 FEET AND WEST 306.06 FEET FROM THE SOUTHEAST CORNER OF THE SOUTHWEST QUARTER OF SECTION 8, TOWNSHIP 6 NORTH, RANGE 1 WEST, SALT LAKE BASE AND MERIDIAN AND RUNNING THENCE NORTH 00°54'00" EAST ALONG SAID PROPOSED RIGHT-OF-WAY LINE 145.00 FEET; THENCE EAST 369.26 FEET; THENCE SOUTH 24°58'53" EAST 159.96 FEET; THENCE WEST 439.10 FEET TO THE POINT OF BEGINNING.

CONTAINS 1.345 ACRES

NARRATIVE

1. THE PURPOSE OF THIS SURVEY IS TO PROVIDE AN "ALTA/ACSM LAND TITLE SURVEY" ON THE SUBJECT PROPERTY PRIOR TO THE SALE OF THE LAND.

2. THIS SURVEY DOES NOT CONSTITUTE A TITLE SEARCH BY THE SURVEYOR. ALL INFORMATION REGARDING RECORD EASEMENTS, ADJOINERS AND OTHER DOCUMENTS THAT MIGHT AFFECT THE QUALITY OF TITLE TO TRACT SHOWN HEREON WAS GAINED FROM TITLE COMMITMENT NO: NCS-139804-SLC, PREPARED BY THE TALON GROUP TITLE AND SETTLEMENT SERVICES. EFFECTIVE DATE: FEBRUARY 25, 2005, AT 7:30 AM. THE FOLLOWING COMMENTS CORRESPOND TO THE ITEMS NUMBERED IN THE ABOVE-REFERENCED COMMITMENT.

SCHEDULE B-2; EXCEPTION NO.:

(12) RIGHT OF WAY FOR A PIPELINE AS DISCLOSED IN THAT CERTAIN WARRANTY DEED RECORDED OCTOBER 7, 1952, AS ENTRY NO. 196138, IN BOOK 400, AT PAGE 438 OF OFFICIAL RECORDS.

(SURVEYOR'S NOTE: AFFECTS ALL OF DEED PARCELS 1, 2 AND OTHER PROPERTY)

3. McNEIL ENGINEERING, INC., MAKES NO REPRESENTATIONS AS TO THE EXISTENCE OF ANY OTHER RECORD DOCUMENTS THAT MAY AFFECT THIS PARCEL OTHER THAN THOSE SHOWN IN THE EXCEPTIONS OF SCHEDULE B-2 AS SHOWN HEREON.

4. THE BASIS OF BEARING FOR THIS SURVEY IS NORTH 24°57'00" WEST ALONG THE MONUMENT LINE OF HARRISVILLE ROAD AT THE INTERSECTIONS OF NORTH STREET AND LARSEN LANE, BEING PART OF THE SOUTH HALF OF SECTION 8, T.6N, R.1W., SALT LAKE BASE AND MERIDIAN AS SHOWN ON THIS SURVEY.

5. CORNERS MONUMENTS NOT FOUND ON THE PROPERTY WERE MARKED WITH A 5/8 INCH BAR, TWO FEET IN LENGTH, AND RED PLASTIC CAP OR NAIL AND WASHER STAMPED "MCNEIL ENGR." AS SHOWN ON THE ACCOMPANYING PLAT.

6. THE LOCATIONS OF UNDERGROUND UTILITIES AS SHOWN HEREON ARE BASED ON ABOVE-GROUND STRUCTURES AND RECORD DRAWINGS PROVIDED THE SURVEYOR. LOCATIONS OF UNDERGROUND UTILITIES/STRUCTURES MAY VARY FROM LOCATIONS SHOWN HEREON. ALTHOUGH ADDITIONAL BURIED UTILITIES/STRUCTURES MAY BE ENCOUNTERED, TO THE BEST OF OUR KNOWLEDGE THERE ARE NO EXISTING UTILITIES EXCEPT AS SHOWN ON THIS SURVEY. NO EXCAVATIONS WERE MADE DURING THE PROGRESS OF THIS SURVEY TO LOCATE BURIED UTILITIES/STRUCTURES. BEFORE EXCAVATIONS ARE BEGUN, NOTIFY BLUE STAKES. THERE MAY EXIST ADDITIONAL RECORD DOCUMENTS THAT WOULD AFFECT THIS PARCEL.

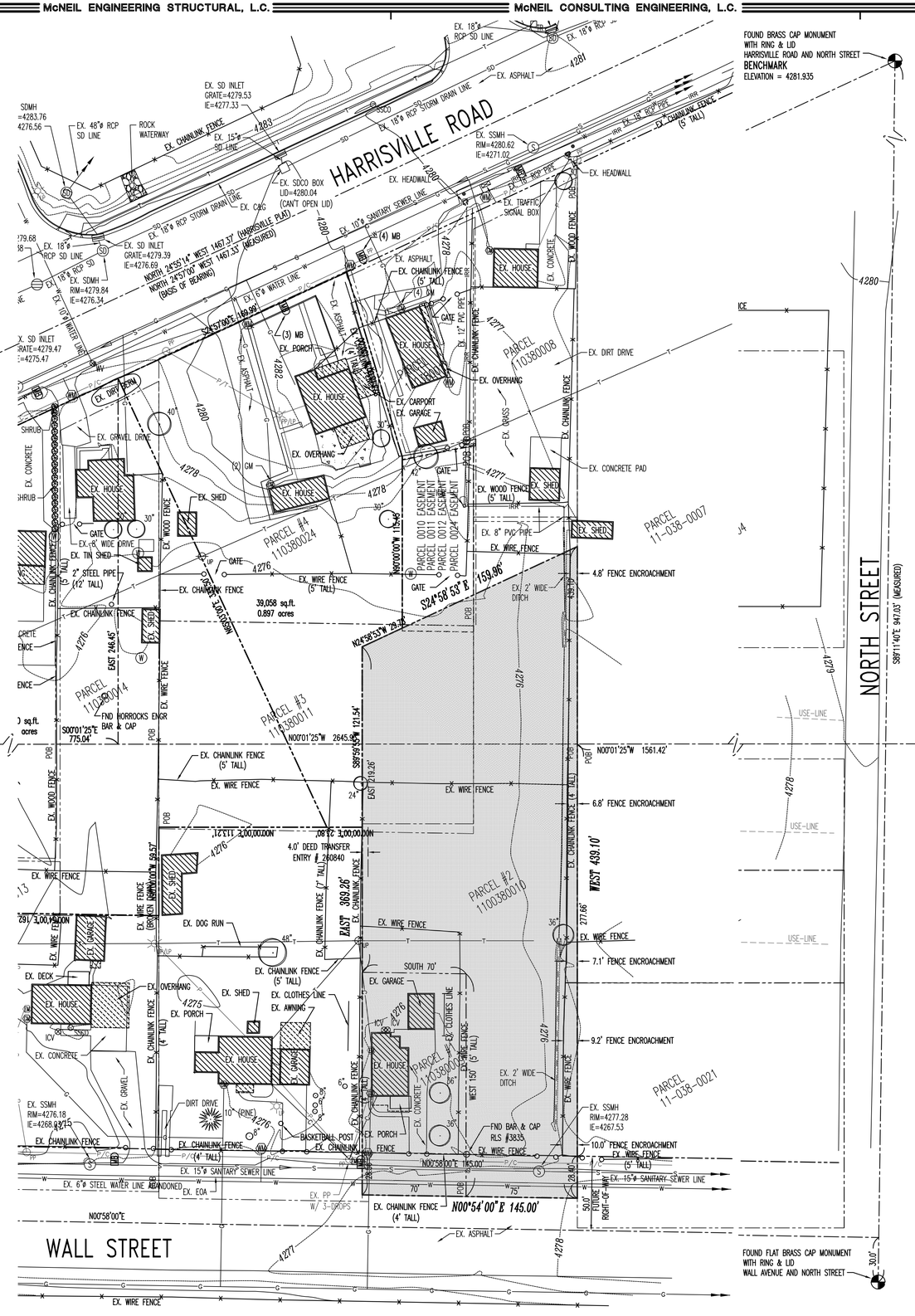

NORTH

SCALE: 1" = 40'

0 20 40 60 80 120 160 200

SURVEY STANDARD LEGEND

- MONUMENT LINE
- CENTER LINE
- SUBJECT PROPERTY LINE
- ADJACENT PROPERTY LINE
- EASEMENT LINE
- FENCE LINE
- POWER LINE
- TELEPHONE LINE
- ATMS CABLE
- FIBER-OPTIC CABLE
- NATURAL GAS LINE
- WATER LINE
- SECONDARY WATER LINE
- SANITARY SEWER LINE
- STORM DRAIN LINE
- IRRIGATION LINE
- ROOF DRAIN LINE
- DITCH FLOWLINE
- CONTOUR LINE
- SECTION CORNER (FOUND)
- SECTION CORNER (NOT FOUND)
- STREET MONUMENT
- STREET MONUMENT (NOT FOUND)
- POWER POLE
- UTILITY POLE
- GUY ANCHOR
- POWER TRANSFORMER
- TRAFFIC SIGNAL CABINET
- LIGHT POLE
- TELEPHONE RISER
- TELEPHONE MANHOLE
- TRAFFIC SIGNAL BOX
- WATER MANHOLE
- WATER VALVE
- WATER METER
- FIRE HYDRANT
- SANITARY SEWER MANHOLE
- SANITARY SEWER CLEANOUT
- STORM DRAIN MANHOLE
- STORM DRAIN CURB INLET
- STORM DRAIN CATCH BASIN
- STORM DRAIN CLEANOUT
- STORM DRAIN COMBO BOX
- SPOT ELEVATION
- FLOW DIRECTION
- CONIFEROUS TREE
- DECIDUOUS TREE
- MAILBOX
- SIGN

SURVEYOR'S CERTIFICATE

TO:
UTAH STATE BUILDING OWNERSHIP AUTHORITY,
INCOME PROPERTY INVESTMENTS,
EXCHANGE INVESTMENTS, L.L.C.,
RAGS CAPITAL, L.L.C.,
THE TALON GROUP TITLE AND SETTLEMENT SERVICES:

THIS IS TO CERTIFY THAT THIS MAP OR PLAT AND THE SURVEY ON WHICH IT IS BASED WERE MADE IN ACCORDANCE WITH THE "MINIMUM STANDARD DETAIL REQUIREMENTS FOR ALTA/ACSM LAND TITLE SURVEYS," JOINTLY ESTABLISHED AND ADOPTED BY ALTA, ACSM AND NSPS IN 1999. PURSUANT TO THE ACCURACY STANDARDS AS ADOPTED BY ALTA, NSPS, AND ACSM AND IN EFFECT ON THE DATE OF THIS CERTIFICATION, UNDERSIGNED FURTHER CERTIFIES THAT:

PROPER FIELD PROCEDURES, INSTRUMENTATION, AND ADEQUATE SURVEY PERSONNEL WERE EMPLOYED IN ORDER TO ACHIEVE RESULTS COMPARABLE TO THOSE OUTLINED IN THE "MINIMUM ANGLE, DISTANCE, AND CLOSURE REQUIREMENTS FOR SURVEY MEASUREMENTS WHICH CONTROL LAND BOUNDARIES FOR ALTA/ACSM LAND TITLE SURVEYS."

KENNETH A. PETTY DATE:
LICENSE NO.: 362254

ADOPTED BY THE AMERICAN LAND TITLE ASSOCIATION ON OCTOBER 6, 1999
ADOPTED BY THE BOARD OF DIRECTION, AMERICAN CONGRESS ON SURVEYING AND MAPPING ON OCTOBER 20, 1999.
ADOPTED BY THE BOARD OF DIRECTORS, NATIONAL SOCIETY OF PROFESSIONAL SURVEYORS ON OCTOBER 19, 1999.
AMERICAN LAND TITLE ASSOCIATION, 1828 L ST., N.W., SUITE 705, WASHINGTON, D.C. 20036
AMERICAN CONGRESS ON SURVEYING AND MAPPING, 5410 GROSVENOR LANE, BETHESDA, MD 20814
NATIONAL SOCIETY OF PROFESSIONAL SURVEYORS, 5410 GROSVENOR LANE, BETHESDA, MD 20814

VICINITY MAP
SCALE: N.T.S.

McNEIL ENGINEERING AND LAND SURVEYING
PROFESSIONAL CIVIL ENGINEERING & LAND SURVEYING SERVICES
6995 SOUTH 900 EAST MIDVALE, UTAH 84047
TEL: (801) 255-7700 FAX (801) 255-8071
E-MAIL info@mcneileng.com WEB SITE AT www.mcneileng.com

HARRISVILLE COMMONS INCOME PROPERTY INVESTMENT

484 NORTH WALL AVENUE
HARRISVILLE, UTAH
LOCATED IN THE SOUTH HALF OF SECTION 8, TOWNSHIP 6 NORTH, RANGE 1 WEST, SL&B&M

REVISIONS

REV.	DATE	DESCRIPTION
1	3/14/05	REV. LEGAL DESC.

PROJECT NO:	250098
CAD DWG. FILE:	250098ALTA
DRAWN BY:	KAP/JF
CALC BY:	KAP
FIELD CREW:	SURVEYED
CHECKED BY:	KAP
DATE:	03/11/05

SHEET TITLE:
"ALTA/ACSM LAND TITLE SURVEY"

1 OF 1

S:\2005Files\250098\dwg\250098ALTA.dwg Jan 23, 2006 - 11:00am

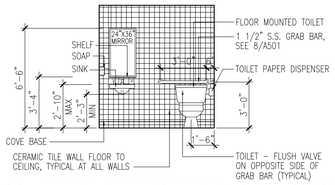

7 A101 **ELEV. AT WOMEN'S RESTROOM**
SCALE: 1/4" = 1'-0"

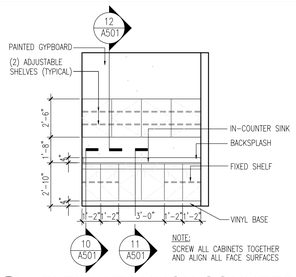

8 A101 **ELEV. AT LUNCH COUNTER**
SCALE: 1/4" = 1'-0"

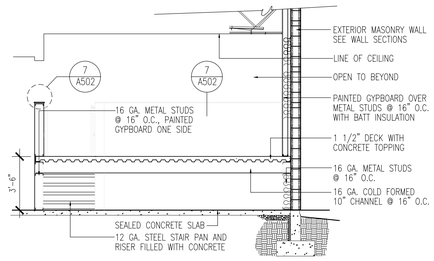

9 A101 **SECTION AT OFFICE PLATFORM**
SCALE: 1/4" = 1'-0"

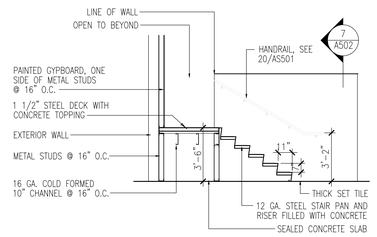

10 A101 **SECTION AT OFFICE STAIR**
SCALE: 1/4" = 1'-0"

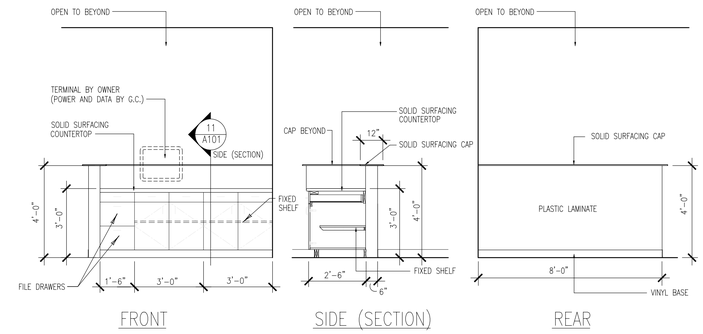

11 A101 **ELEVATIONS AT RECEIVING COUNTER**
SCALE: 1/4" = 1'-0"

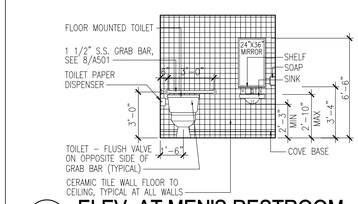

6 A101 **ELEV. AT MEN'S RESTROOM**
SCALE: 1/4" = 1'-0"

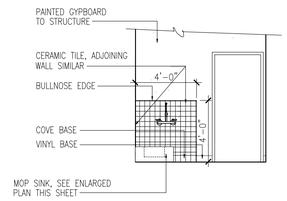

5 A101 **ELEV. AT JANITOR'S ROOM**
SCALE: 1/4" = 1'-0"

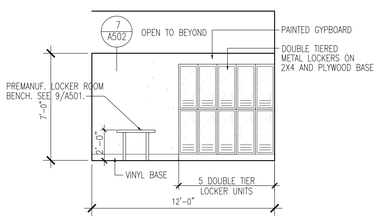

4 A101 **ELEVATION AT LOCKERS**
SCALE: 1/4" = 1'-0"

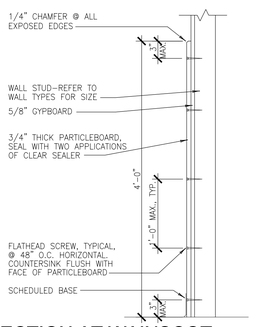

3 A101 **SECTION AT WAINSCOT**
SCALE: NOT TO SCALE

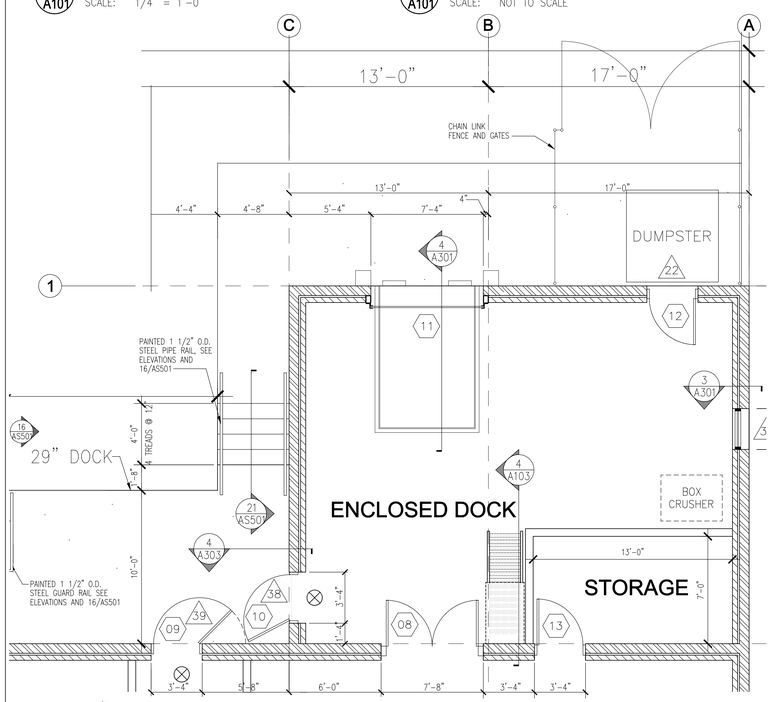

ENLARGED FLOOR PLAN AT ENCLOSED DOCK
SCALE: 1/4" = 1'-0"

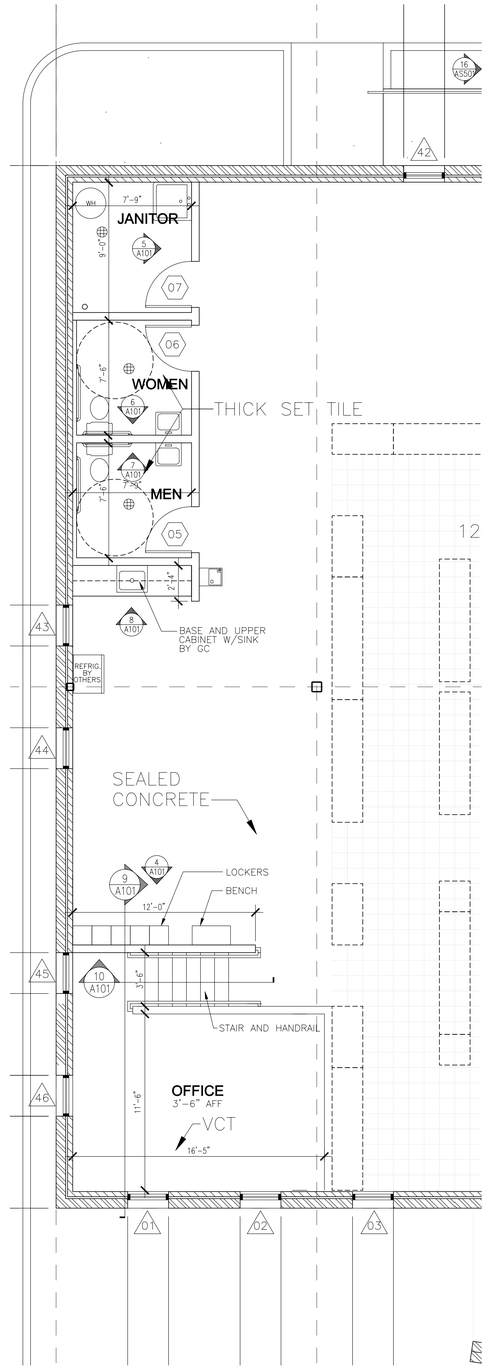

ENLARGED FLOOR PLAN
SCALE: 1/4" = 1'-0"

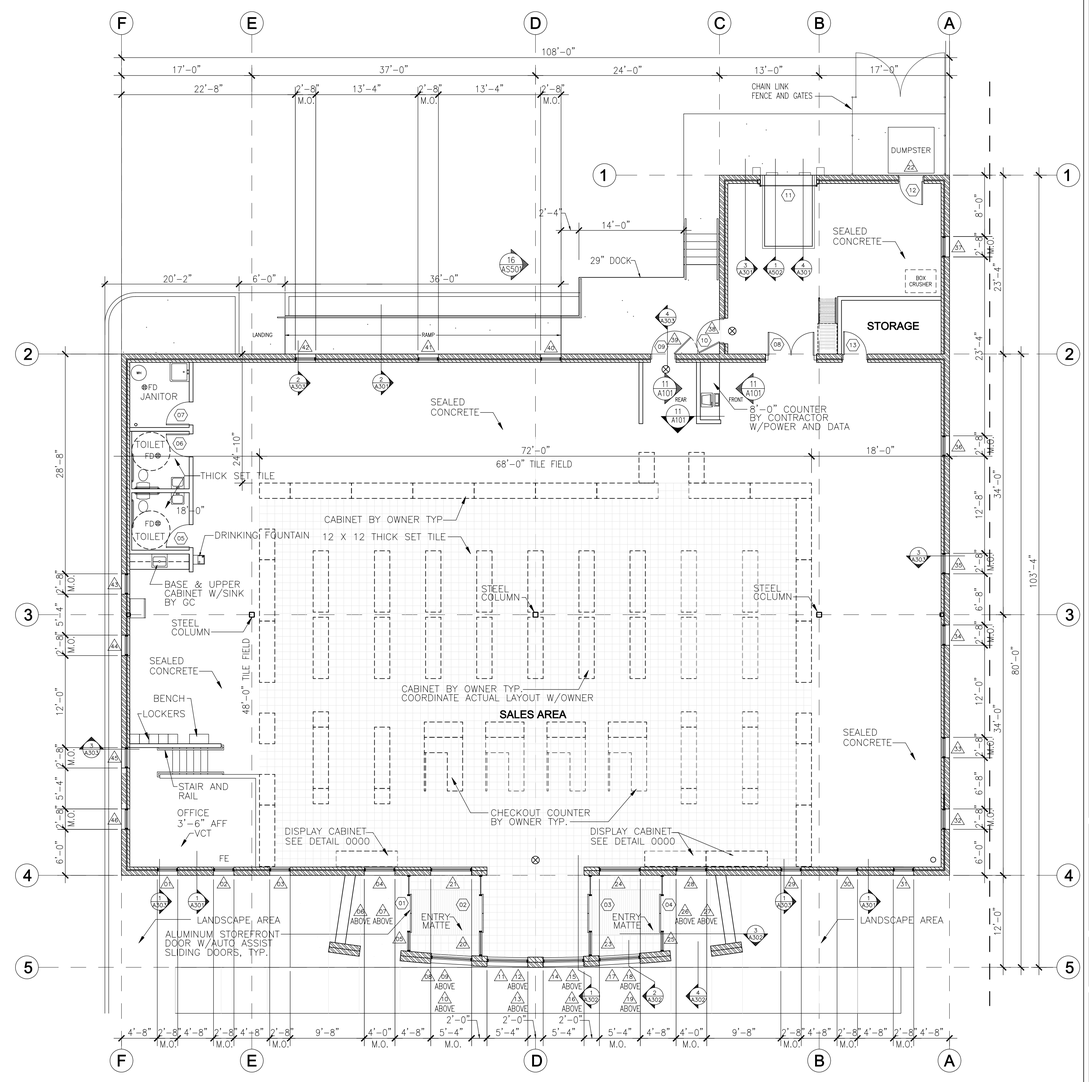

FLOOR PLAN
SCALE: 1/8" = 1'-0"

NEW HARRISVILLE LIQUOR STORE

DEPARTMENT OF ALCOHOLIC BEVERAGE CONTROL
1455 SOUTH WALL AVENUE, HARRISVILLE, UTAH

FRANK N MURDOCK JR ■ Architect & Associates
975 East 100 South Suite 100, Salt Lake City, Utah 84102 TEL: (801) 532-4441 FAX (801) 532-4220

REVISED FLOOR PLAN

REVISION #	DATE:

DFCM PROJECT NO.: 04242030
CONSTR. DOC.
FILE NAME: ABCH-A101
PLOT SCALE: 1:96
DRAWN BY: STAFF
CHECKED BY: FNM
DATE: JANUARY 24, 2006

A 101

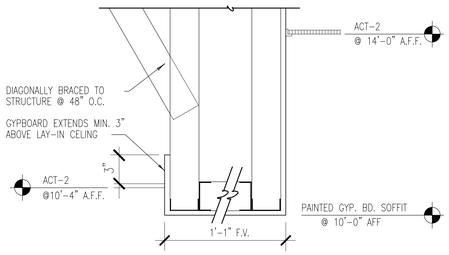

4 A102 NOT USED

SCALE: NOT TO SCALE

5 A102 CEILING DROP DETAIL

SCALE: NOT TO SCALE

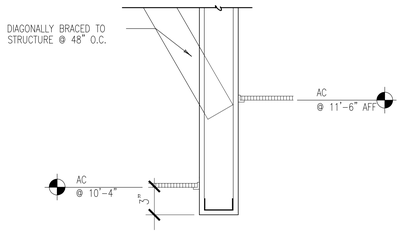

3 A102 CEILING DROP DETAIL

SCALE: NOT TO SCALE

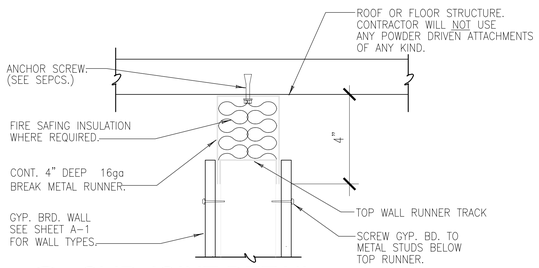

2 A102 SLIP JOINT DETAIL

SCALE: NOT TO SCALE

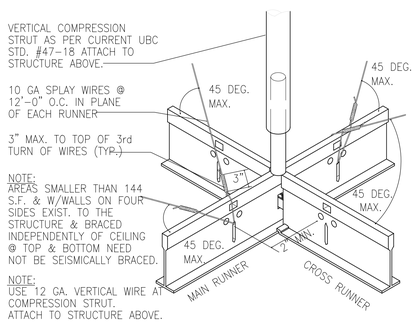

1 A102 SEISMIC BRACING DETAIL

SCALE: NOT TO SCALE

REFLECTED CEILING PLAN LEGEND

4' WALL MOUNTED LIGHTING FIXTURE	8' SUSPENDED LIGHTING FIXTURE	2'X4' SUSPENDED ACOUSTICAL CEILING PROVIDE SEISMIC BRACING – SEE 1/A102	E.S. — PAINTED EXPOSED STRUCTURE HEIGHT MAY VARY
2' SURFACE MOUNTED LIGHTING FIXTURE	UNIT HEATER	METAL SOFFIT PANEL	MSP — METAL SOFFIT PANEL
SECURITY LIGHT	TRACK LIGHT	RETURN REGISTER	AC — 2'X4' SUSPENDED ACOUSTICAL CEILING
2' X 4' FLUORESCENT LIGHTING FIXTURE	8' SUSPENDED INDIRECT LIGHTING FIXTURE	SUPPLY DIFFUSER	GB — GYPSUM BOARD CEILING
RECESSED LIGHTING FIXTURE	WALL MOUNTED LIGHTING FIXTURE	EXHAUST FAN	XGSB — EXTERIOR GYPSUM SOFFET BOARD CEILING UNDER PREFINISHED METAL SOFFET PANEL
		GYPSUM BOARD SOFFIT	0'-0" — CEILING OR SOFFIT HEIGHT (HEIGHT MEASURED FROM FINISHED FLOOR ELEV.: 0'-0")

NOTE: CEILING TO INSTALLED PER 2003 IBC OR BRACED PER 1994 (OR CURRENT)UBC.

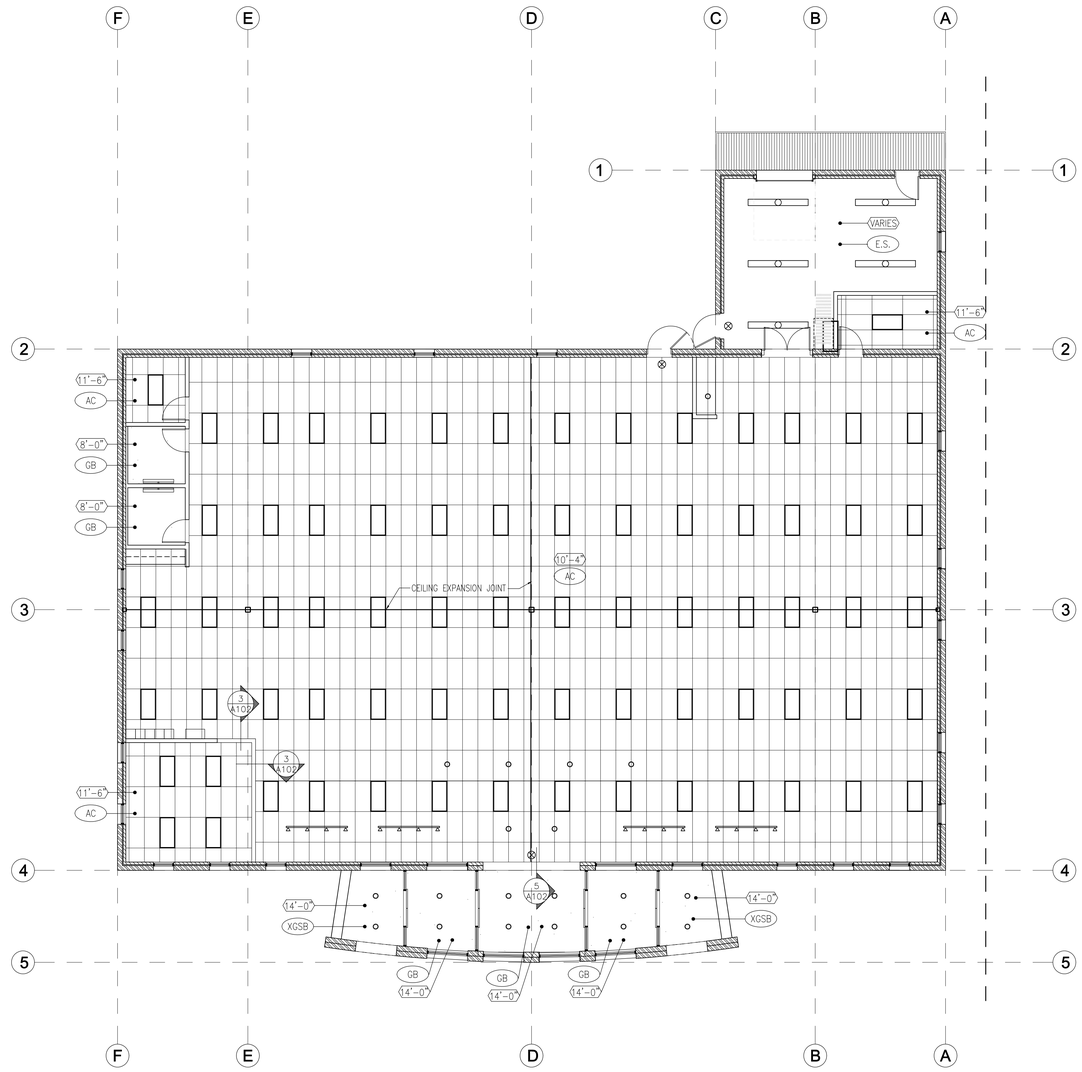

REFLECTED CEILING PLAN

SCALE: 1/8" = 1'-0"

0 2' 4' 8' 16'

NEW HARRISVILLE LIQUOR STORE

DEPARTMENT OF ALCOHOLIC BEVERAGE CONTROL
1455 SOUTH WALL AVENUE, HARRISVILLE, UTAH

FRANK N MURDOCK JR ■ Architect & Associates
975 East 100 South Suite 100, Salt Lake City, Utah 84102 TEL: (801) 532-4441 FAX (801) 532-4220

REFLECTED CEILING PLAN

REVISION # DATE:

DFCM PROJECT NO.:
04242030
CONSTR. DOC.
FILE NAME: ABCH-A102
PLOT SCALE: 1:64
DRAWN BY: STAFF
CHECKED BY: FNM
DATE: JANUARY 24, 2006

A
102

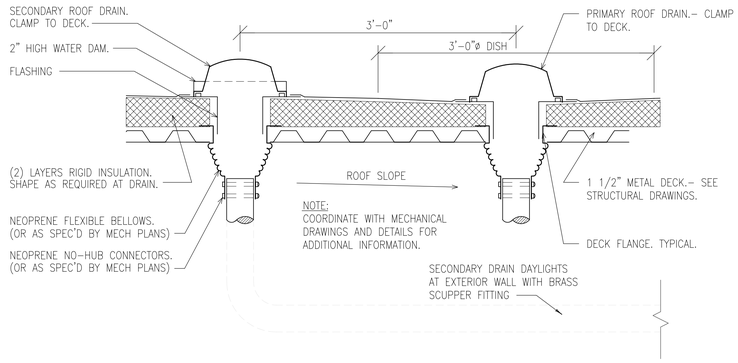

8 A103 **ROOF DRAIN DETAIL**
SCALE: NOT TO SCALE

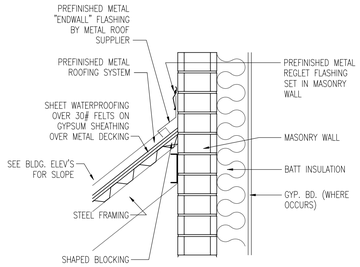

7 A103 **METAL ROOF DETAIL**
SCALE 1" = 1' - 0"

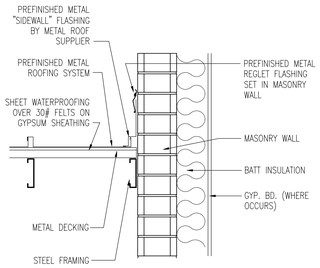

6 A103 **METAL ROOF DETAIL**
SCALE 1" = 1' - 0"

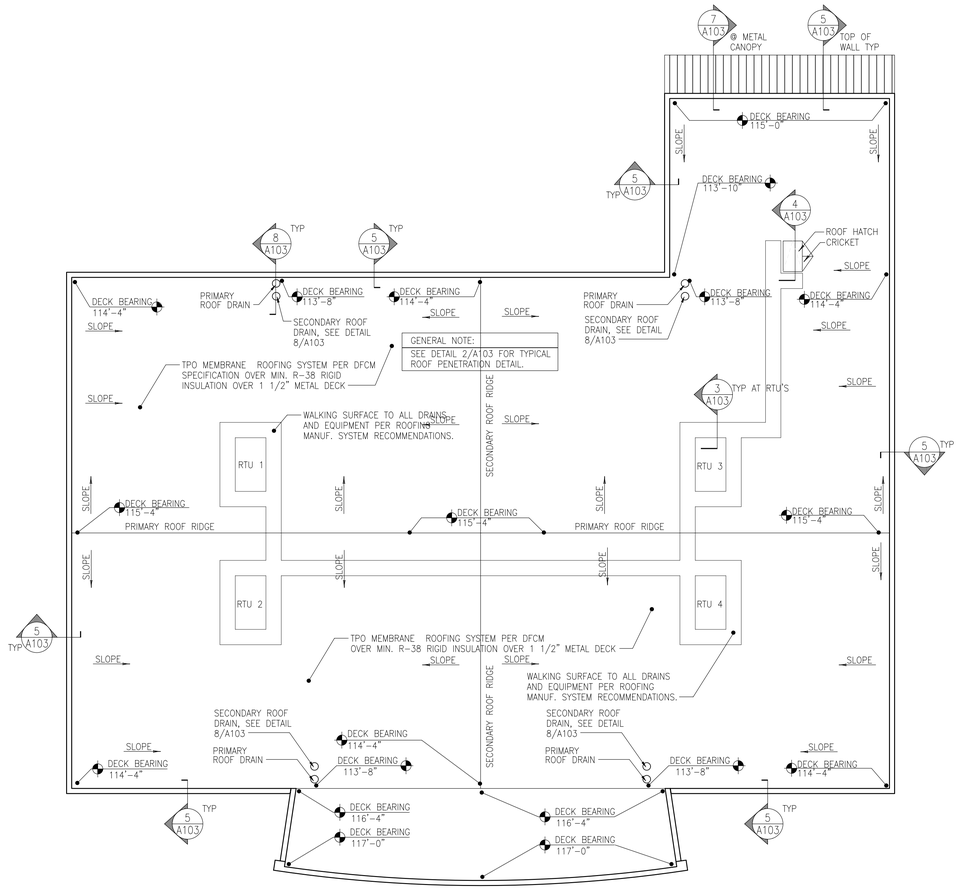

ROOF PLAN
SCALE: 1/8" = 1'-0"

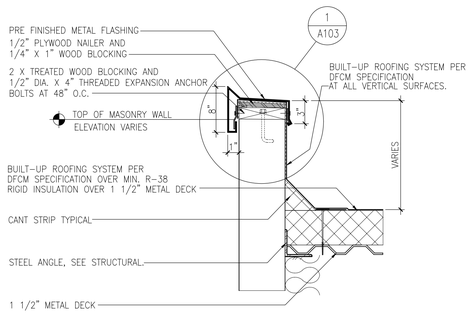

5 A103 **PARAPET CAP DETAIL**
SCALE 1/2" = 1' - 0"

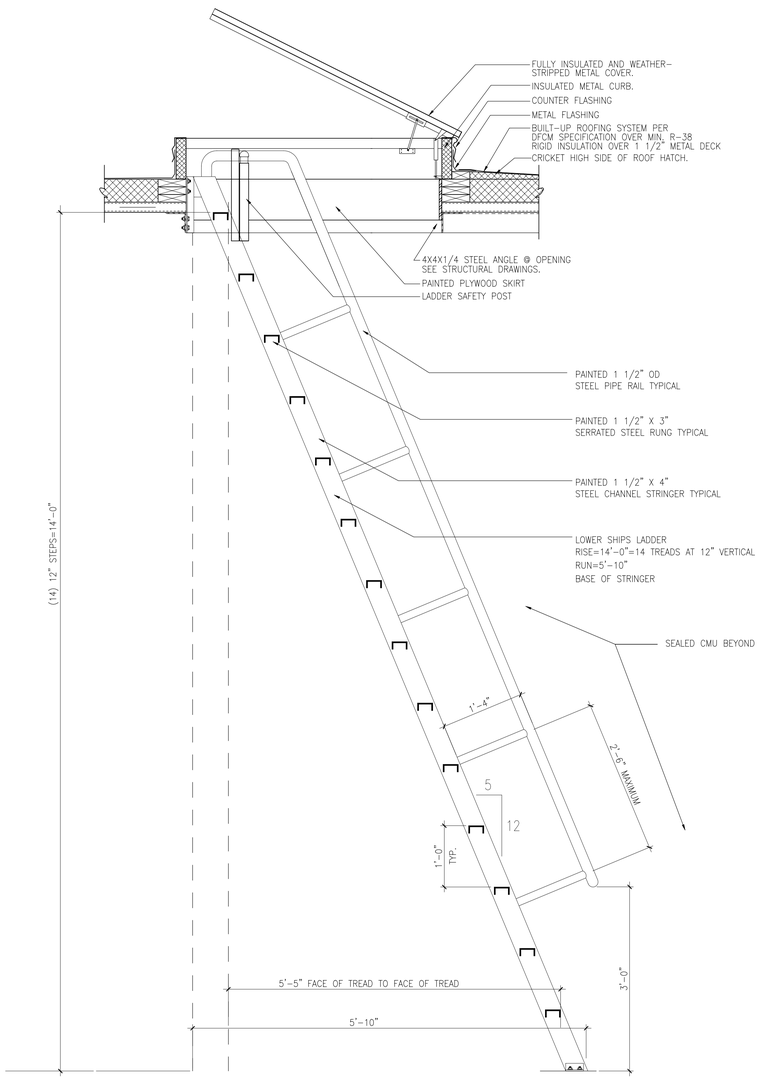

4 A103 **ROOF HATCH DETAIL / SHIPS LADDER**
SCALE: 3/4" = 1'-0"

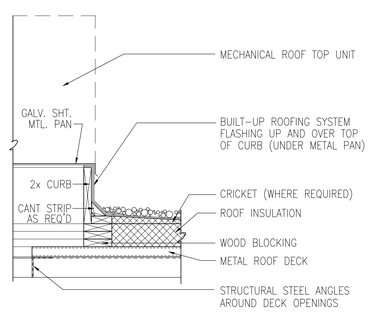

3 A103 **ROOF CURB DETAIL**
SCALE 1" = 1' - 0"

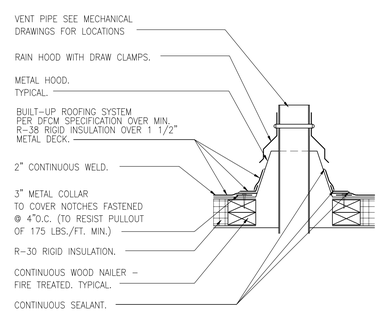

2 A103 **VENT PIPE DETAIL**
SCALE 3" = 1' - 0"

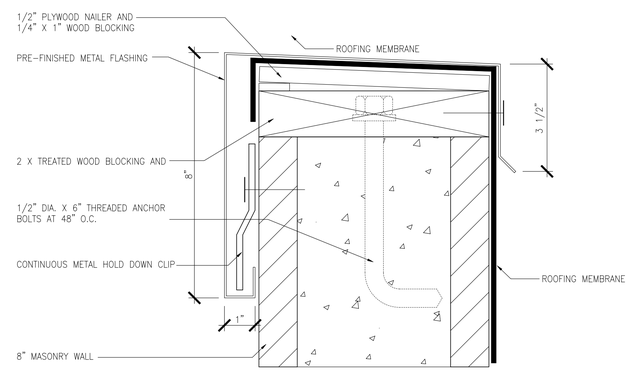

1 A103 **CAP FLASHING DETAIL**
SCALE 1/2" = 1' - 0"

NEW HARRISVILLE LIQUOR STORE

DEPARTMENT OF ALCOHOLIC BEVERAGE CONTROL
WALL AVENUE, HARRISVILLE, UTAH

ROOF PLAN AND DETAILS

FRANK N MURDOCK JR ■ Architect & Associates
975 East 100 South Suite 100, Salt Lake City, Utah 84102 TEL: (801) 532-4441 FAX (801) 532-4220

REVISION # DATE:

DFCM PROJECT NO.:
04242030
CONST DOC
FILE NAME: ABCH-A103
PLOT SCALE: 1:96
DRAWN BY: STAFF
CHECKED BY: FNM
DATE: JANUARY 24, 2006

A
103

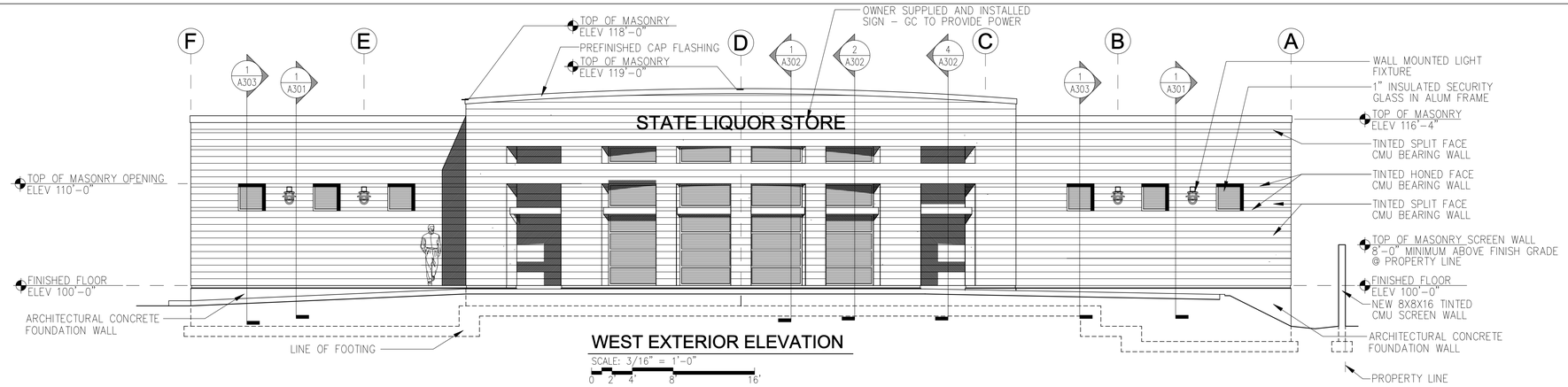

WEST EXTERIOR ELEVATION

SCALE: 3/16" = 1'-0"

0 2 4 8 16'

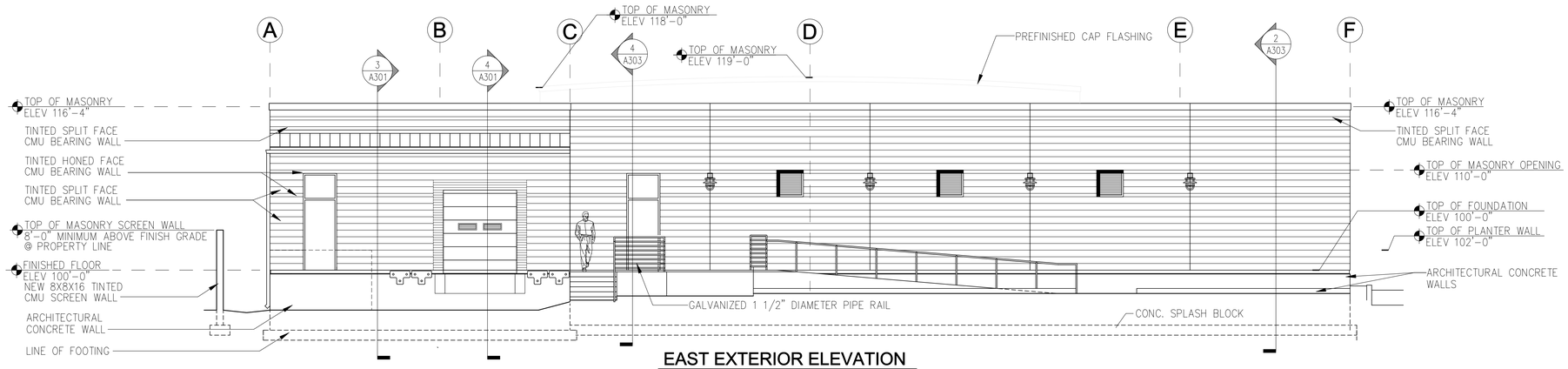

EAST EXTERIOR ELEVATION

SCALE: 3/16" = 1'-0"

0 2 4 8 16'

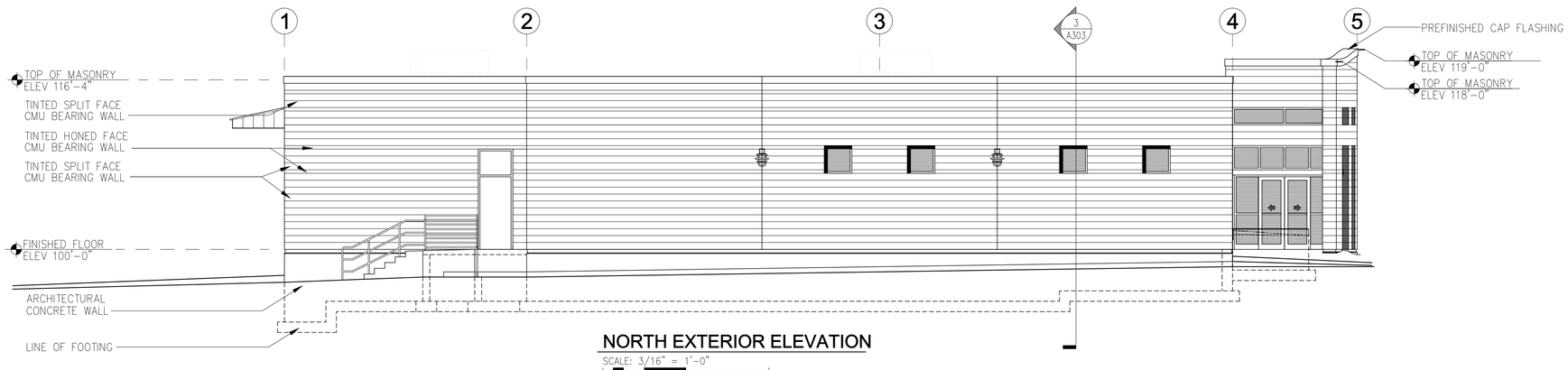

NORTH EXTERIOR ELEVATION

SCALE: 3/16" = 1'-0"

0 2 4 8 16'

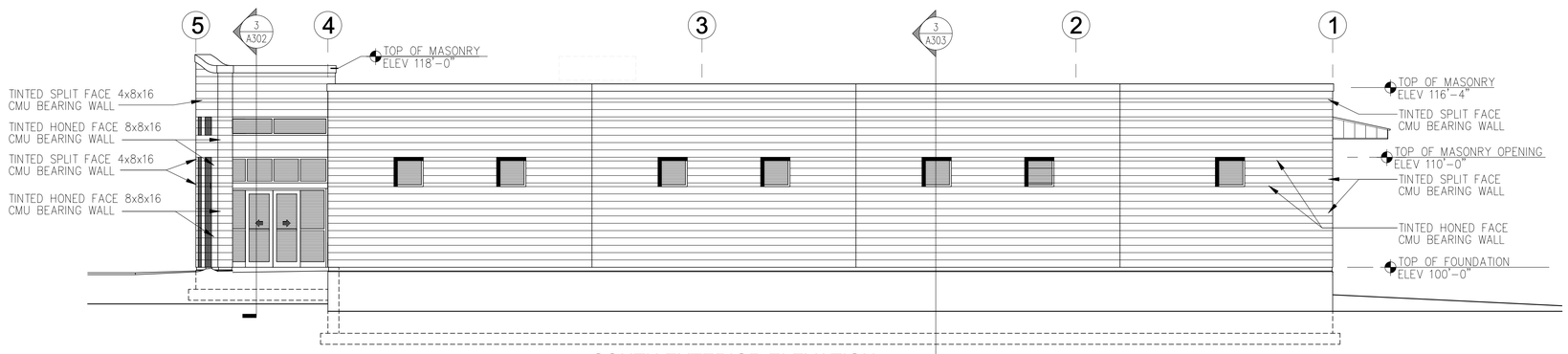

SOUTH EXTERIOR ELEVATION

SCALE: 3/16" = 1'-0"

0 2 4 8 16'

NEW HARRISVILLE LIQUOR STORE

DEPARTMENT OF ALCOHOLIC BEVERAGE CONTROL
1455 SOUTH WALL AVENUE, HARRISVILLE, UTAH

FRANK N MURDOCK JR ■ Architect & Associates
975 East 100 South Suite 100, Salt Lake City, Utah 84102 TEL: (801) 532-4441 FAX (801) 532-4220

EXTERIOR ELEVATIONS

REVISION # DATE:

DFCM PROJECT NO.:
04242030
CONSTR. DOC.
FILE NAME: ABCH-A201
PLOT SCALE: 1:64
DRAWN BY: STAFF
CHECKED BY: FNM
DATE: JANUARY 24, 2006

A
201

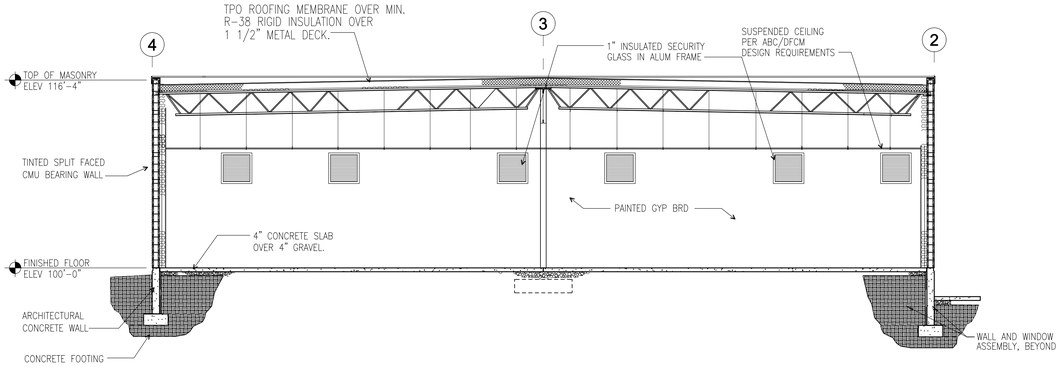

5 A301 **EAST-WEST BUILDING SECTION**

SCALE: 1/4" = 1'-0"

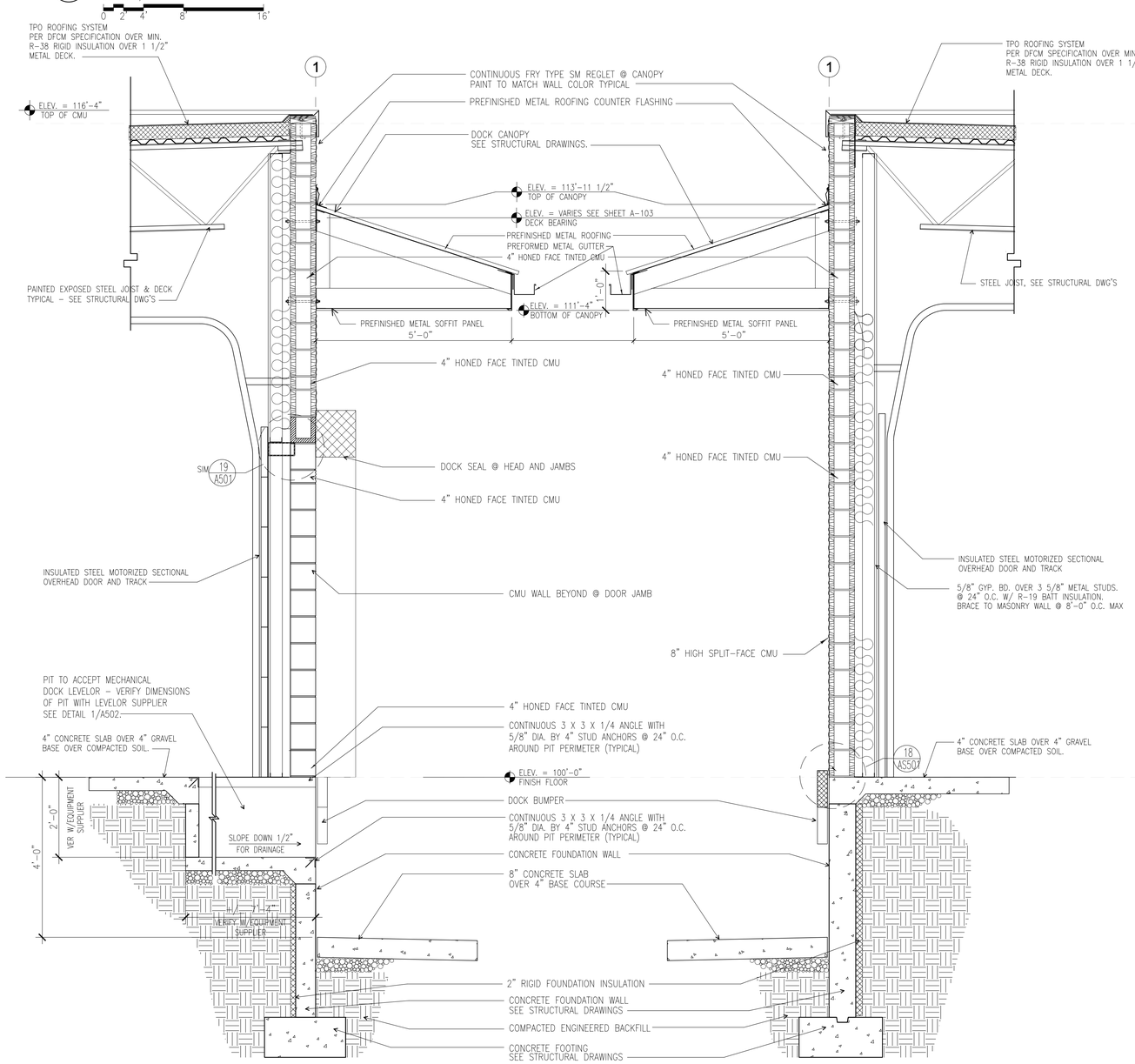

4 A301 **EXTERIOR WALL SECTION**

SCALE: 3/4" = 1'-0"

3 A301 **EXTERIOR WALL SECTION**

SCALE: 3/4" = 1'-0"

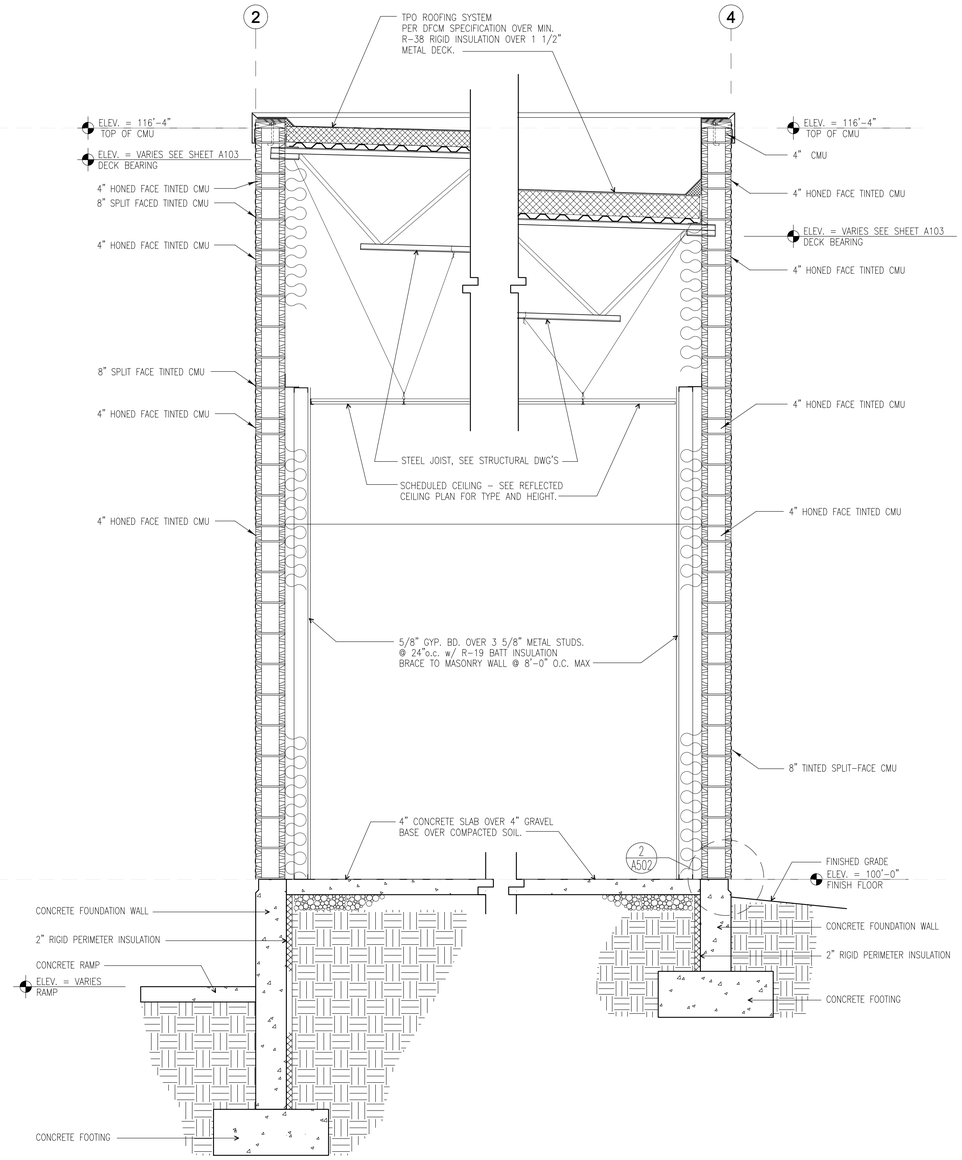

2 A301 **WALL SECTION @ GRID "1"**

SCALE: 3/4" = 1'-0"

1 A301 **WALL SECTION @ GRID "3"**

SCALE: 3/4" = 1'-0"

NEW HARRISVILLE LIQUOR STORE

DEPARTMENT OF ALCOHOLIC BEVERAGE CONTROL
1455 SOUTH WALL AVENUE, HARRISVILLE, UTAH

FRANK N MURDOCK JR ■ Architect & Associates
975 East 100 South Suite 100, Salt Lake City, Utah 84102 TEL: (801) 532-4441 FAX (801) 532-4220

WALL SECTIONS

REVISION # DATE:

DFCM PROJECT NO.:
04242030
CONSTR. DOC.
FILE NAME: ABCH-A301
PLOT SCALE: 1:16
DRAWN BY: STAFF
CHECKED BY: FNM
DATE: JANUARY 24, 2006

A 301

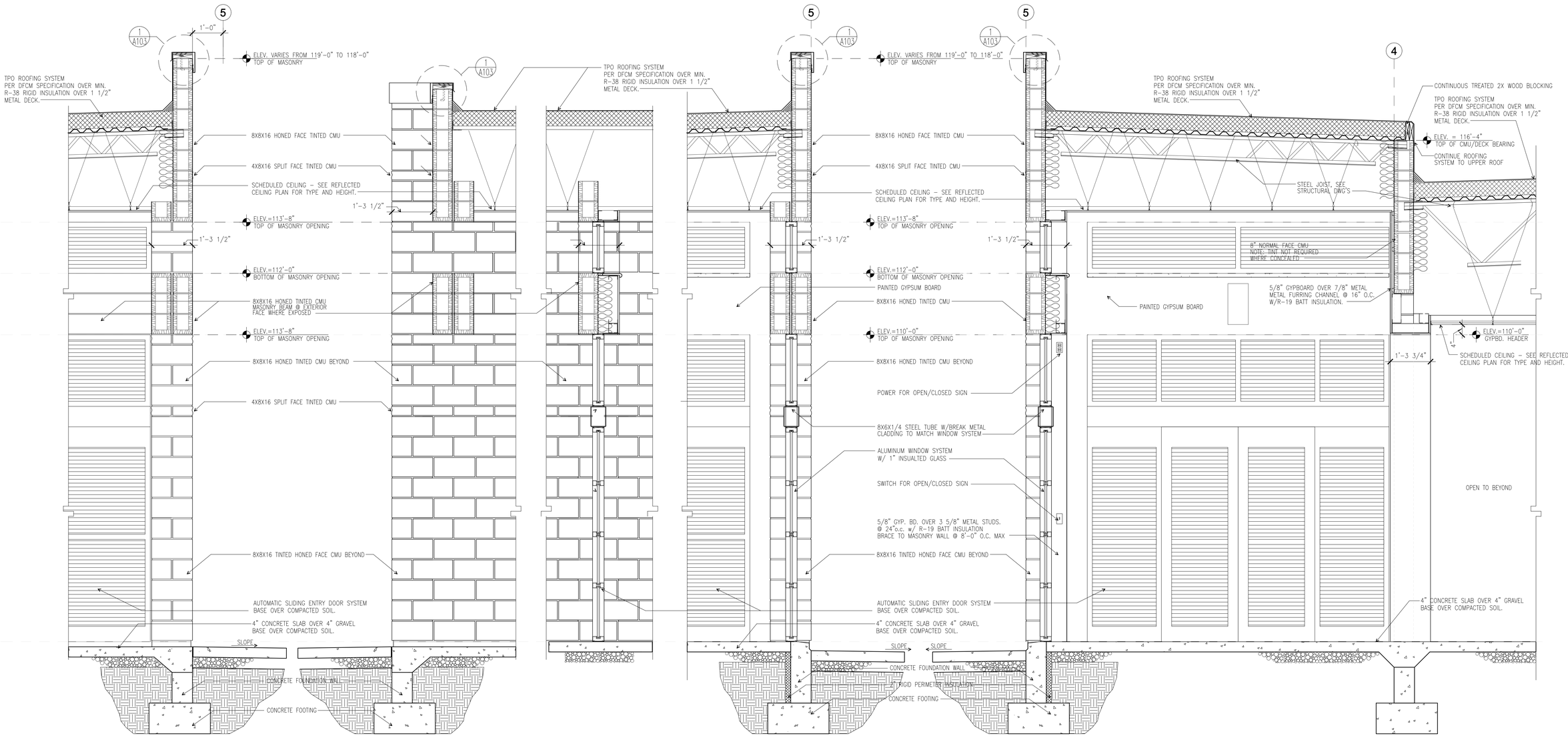

4 A302 **WALL SECTION @ GRID "5"**
SCALE: 3/4" = 1'-0"

3 A302 **WALL SECTION @ MAIN ENTRY**
SCALE: 3/4" = 1'-0"

2 A302 **WALL SECTION @ GRID "5"**
SCALE: 3/4" = 1'-0"

1 A302 **WALL SECTION @ GRID "4" & "5"**
SCALE: 3/8" = 1'-0"

NEW HARRISVILLE LIQUOR STORE

DEPARTMENT OF ALCOHOLIC BEVERAGE CONTROL
1455 WALL AVENUE, HARRISVILLE, UTAH

FRANK N MURDOCK JR ■ Architect & Associates
975 East 100 South Suite 100, Salt Lake City, Utah 84102 TEL: (801) 532-4441 FAX (801) 532-4220

WALL SECTIONS

REVISION # DATE:

DFCM PROJECT NO.:
04242030
CONSTR. DOC.
FILE NAME: ABCH-A302
PLOT SCALE: 1:16
DRAWN BY: STAFF
CHECKED BY: FNM
DATE: JAN 24 2006

A
302

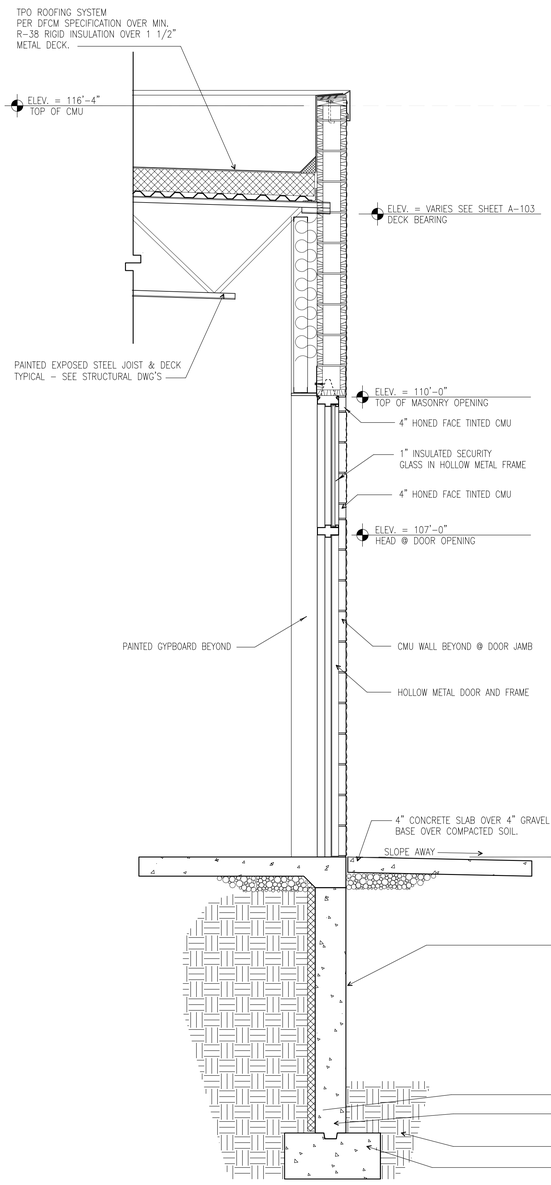

4 A303 EXTERIOR WALL SECTION

SCALE: 3/4" = 1'-0"

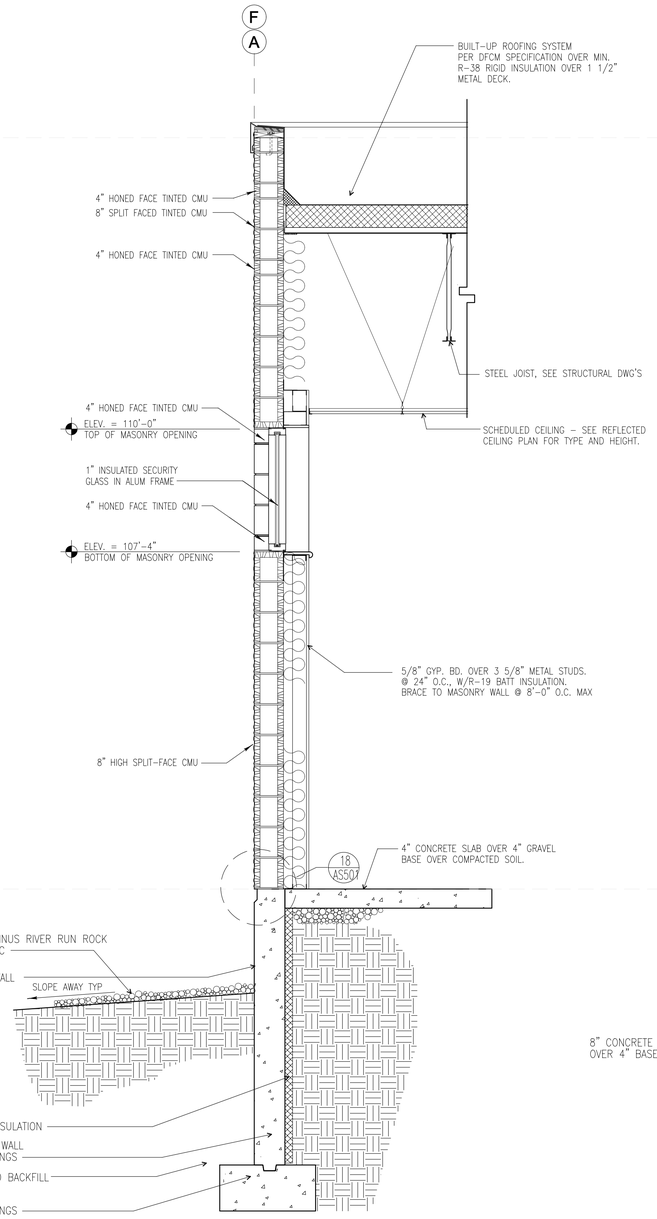

3 A303 WALL SECTION @ GRIDS "A" AND "F"

SCALE: 3/4" = 1'-0"

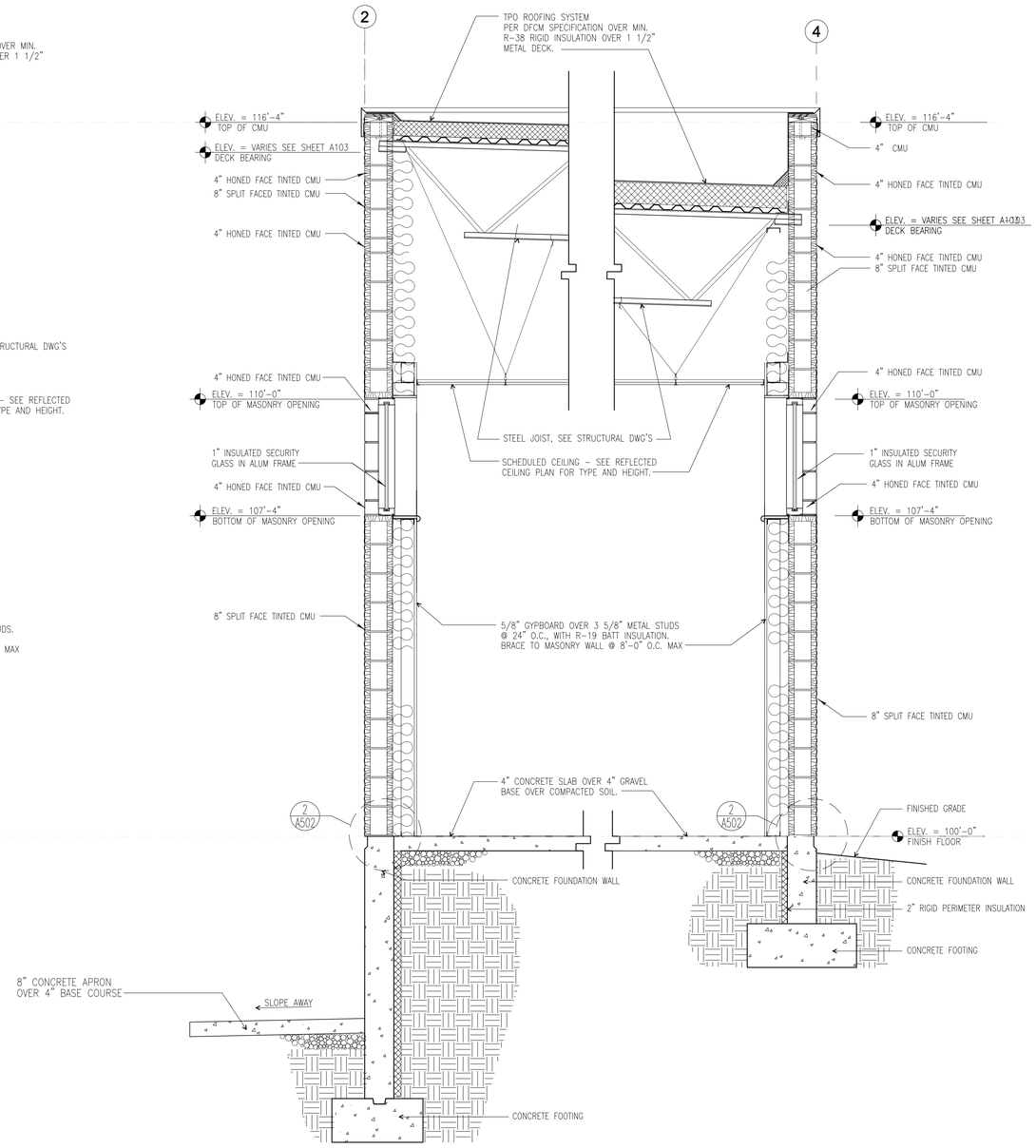

2 A303 WALL SECTION @ GRID "2"

SCALE: 3/4" = 1'-0"

1 A303 WALL SECTION @ GRID "4"

SCALE: 3/4" = 1'-0"

NEW HARRISVILLE LIQUOR STORE

DEPARTMENT OF ALCOHOLIC BEVERAGE CONTROL
1455 SOUTH WALL AVENUE, HARRISVILLE, UTAH

FRANK N MURDOCK JR ■ Architect & Associates
975 East 100 South Suite 100, Salt Lake City, Utah 84102 TEL: (801) 532-4441 FAX (801) 532-4220

WALL SECTIONS

REVISION # DATE:

DFCM PROJECT NO.:
04242030
CONSTR. DOC.
FILE NAME: ABCH-A303
PLOT SCALE: 1:16
DRAWN BY: STAFF
CHECKED BY: FNM
DATE: JANUARY 24, 2006

A
303

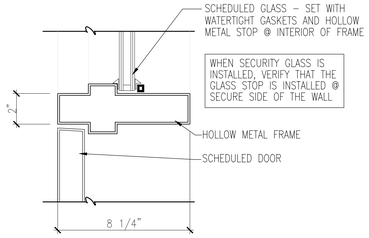

25 A501 **HM DOOR HEAD/TRANSOM SILL**
SCALE: 3" = 1'-0"

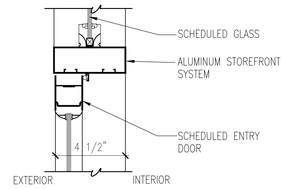

24 A501 **STOREFRONT DOOR HEAD/TRANSOM SILL**
SCALE: 3" = 1'-0"

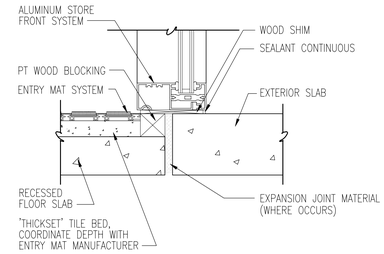

23 A501 **STOREFRONT WINDOW SILL**
SCALE: 3" = 1'-0"

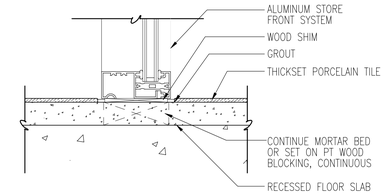

22 A501 **STOREFRONT WINDOW SILL**
SCALE: 3" = 1'-0"

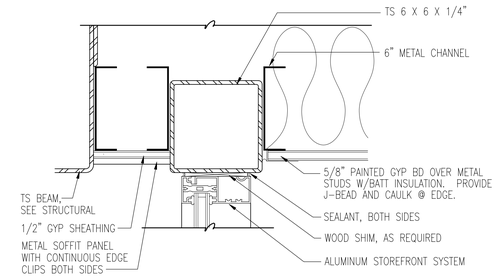

21 A501 **STOREFRONT WINDOW HEAD**
SCALE: 3" = 1'-0"

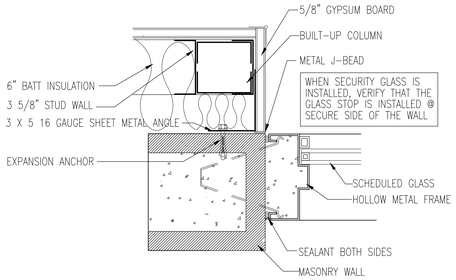

16 A501 **HOLLOW METAL WINDOW JAMB**
SCALE: 3" = 1'-0"

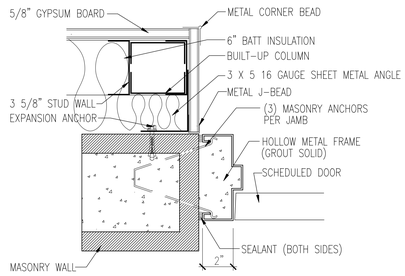

17 A501 **HOLLOW METAL DOOR JAMB**
SCALE: 3" = 1'-0"

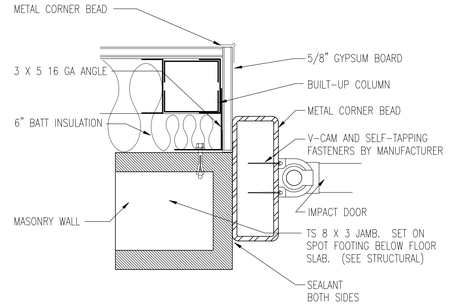

18 A501 **IMPACT DOOR JAMB/head sim**
SCALE: 3" = 1'-0"

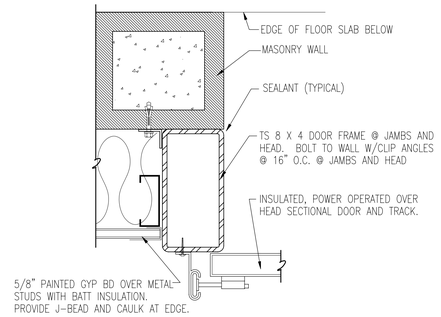

19 A501 **OVERHEAD DOOR JAMB**
SCALE: 3" = 1'-0"

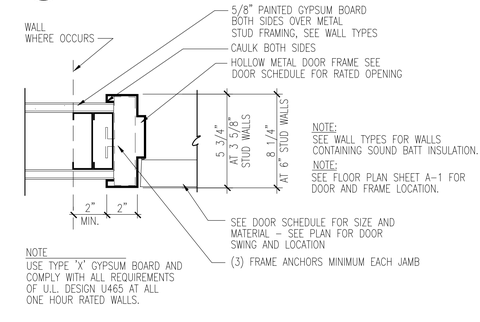

20 A501 **HOLLOW METAL DOOR (INTERIOR)**
SCALE: 3" = 1'-0"

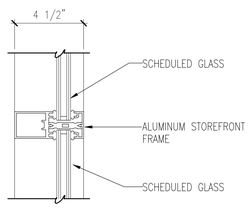

15 A501 **STOREFRONT WINDOW MULLION**
SCALE: 3" = 1'-0"

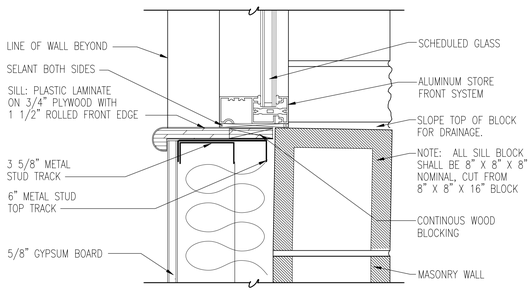

14 A501 **STOREFRONT WINDOW SILL**
SCALE: 3" = 1'-0"

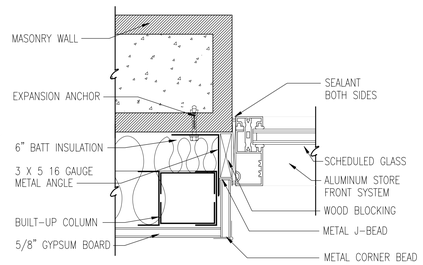

13 A501 **STOREFRONT WINDOW JAMB**
SCALE: 3" = 1'-0"

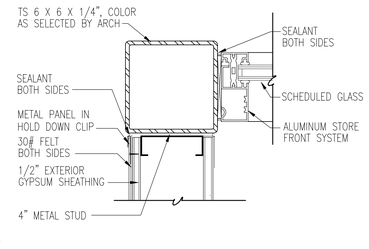

12 A501 **STOREFRONT WINDOW JAMB**
SCALE: 1-1/2" = 1'-0"

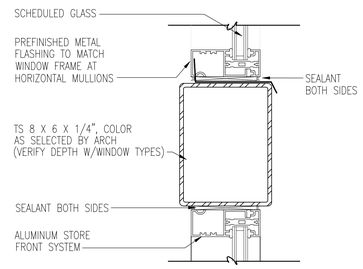

11 A501 **STOREFRONT MULLION/MUNTON**
SCALE: 1-1/2" = 1'-0"

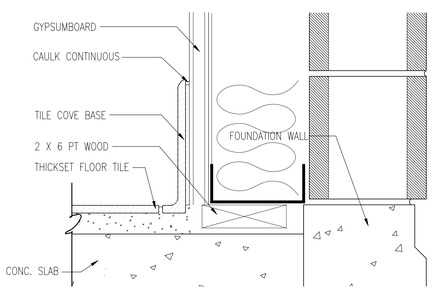

5 A501 **THICKSET TILE BASE**
SCALE: 3" = 1'-0"

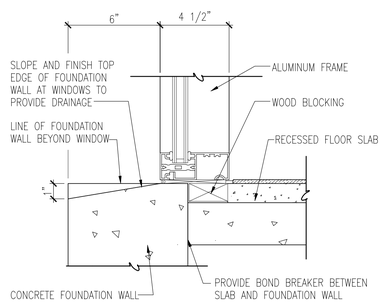

7 A501 **STOREFRONT WINDOW SILL**
SCALE: 3" = 1'-0"

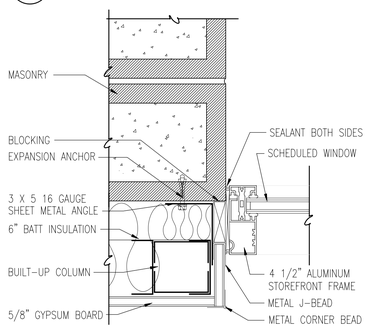

8 A501 **STOREFRONT WINDOW JAMB**
SCALE: 3" = 1'-0"

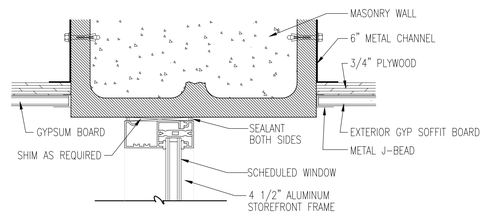

9 A501 **STOREFRONT WINDOW HEAD/JAMB**
SCALE: 3" = 1'-0"

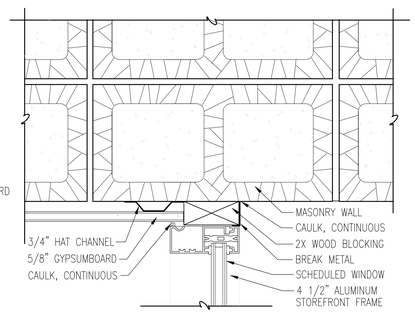

10 A501 **STOREFRONT WINDOW JAMB**
SCALE: NOT TO SCALE

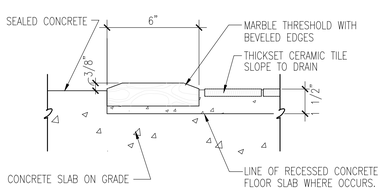

5 A501 **MARBLE THRESHOLD**
SCALE: 3" = 1'-0"

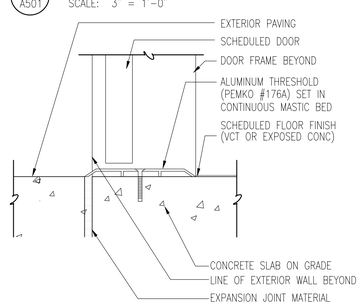

4 A501 **DOOR THRESHOLD**
SCALE: 3"=1'-0"

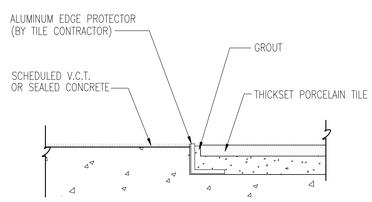

3 A501 **CONCRETE TO TILE TRANSITION**
SCALE: NONE

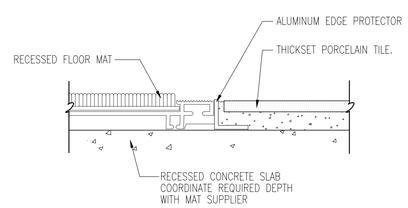

2 A501 **TILE TO FLOOR MAT DETAIL**
SCALE: NONE

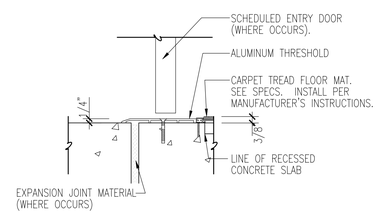

1 A501 **DOOR THRESHOLD (entry mat)**
SCALE: 3" = 1'-0"

NEW HARRISVILLE LIQUOR STORE

DEPARTMENT OF ALCOHOLIC BEVERAGE CONTROL
1455 SOUTH WALL AVENUE, HARRISVILLE, UTAH

FRANK N MURDOCK JR ■ Architect & Associates
975 East 100 South Suite 100, Salt Lake City, Utah 84102 TEL: (801) 532-4441 FAX (801) 532-4220

MISCELLANEOUS DETAILS

REVISION # DATE:

DFCM PROJECT NO.: 04242030
CONSTR. DOC.
FILE NAME: ABCH-A501
PLOT SCALE: 3:12
DRAWN BY: STAFF
CHECKED BY: FNM
DATE: JANUARY 24, 2006

A 501

NOT USED

6 / A502 NOT USED
SCALE: NONE

5 / A502 ROOF FLASHING
SCALE: NONE

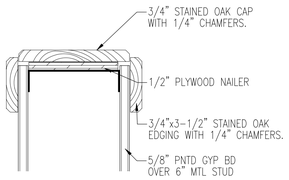

NOT USED

7 / A502 WALL CAP
SCALE: NONE

4 / A502 NOT USED
SCALE: NONE

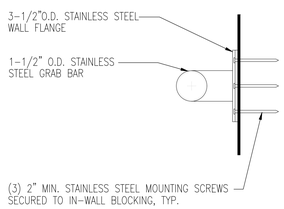

NOTE:
1. INSTALLATION MUST WITHSTAND 250 LB. FORCE IN ANY DIRECTION.

8 / A502 GRAB BAR DETAIL
SCALE: 3" = 1'-0"

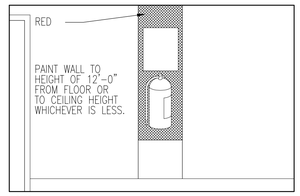

NOTES:
1. FOR FIRE EXTINGUISHERS IN THE WORKROOM, A RED BACKGROUND MUST BE PROVIDED WHICH EXTENDS SIX INCHES ON THE SIDES AND BELOW THE FIRE EXTINGUISHERS OR CABINETS. THE RED BACKGROUND MUST BE EXTENDED ABOVE THE FIRE EXTINGUISHER TO A HEIGHT OF 12 FEET ABOVE THE FINISHED FLOOR OR TO THE CEILING IF THE ROOM IS LESS THAN 12 FEET IN HEIGHT.
2. LOCATE SAFETY EQUIPMENT AT THE HEIGHT RECOMMENDED BY OSHA AND ON THE MOST ACCESSIBLE FACE.

3 / A502 FIRE EXTINGUISHER IDENTIFICATION
SCALE: NONE

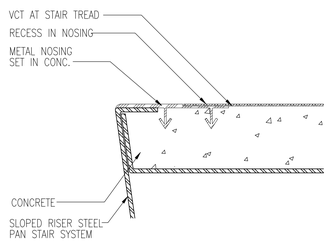

13 / A502 STAIR NOSING DETAIL
SCALE: 3" = 1'-0"

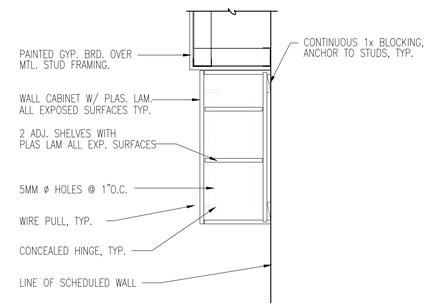

12 / A502 UPPER CABINET SECTION
SCALE: 1-1/2" = 1'-0"

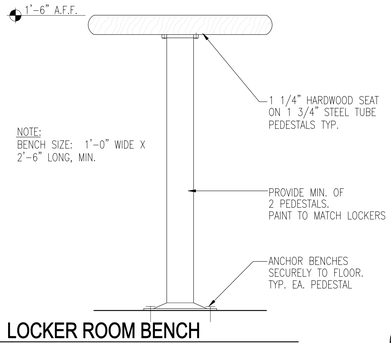

9 / A502 LOCKER ROOM BENCH
SCALE: 3" = 1'-0"

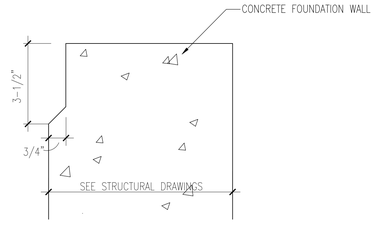

2 / A502 CONCRETE REVEAL
SCALE: NONE

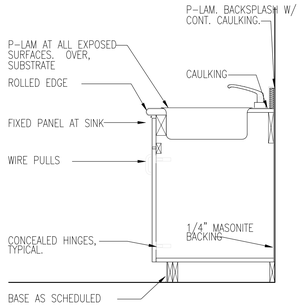

11 / A502 SINK CABINET SECTION
SCALE: 1-1/2" = 1'-0"

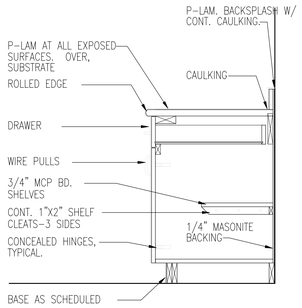

10 / A502 BASE CABINET SECTION
SCALE: 1-1/2" = 1'-0"

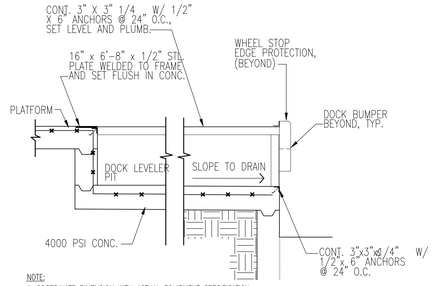

NOTE:
1. COORDINATE DIMENSION WITH ACTUAL EQUIPMENT SPECIFICATION.

1 / A502 DOCK LEVELER
SCALE: 1/2" = 1'-0"

NEW HARRISVILLE LIQUOR STORE
DEPARTMENT OF ALCOHOLIC BEVERAGE CONTROL
1455 SOUTH WALL AVENUE, HARRISVILLE, UTAH

FRANK N MURDOCK JR ■ Architect & Associates
975 East 100 South Suite 100, Salt Lake City, Utah 84102 TEL: (801) 532-4441 FAX (801) 532-4220

MISCELLANEOUS DETAILS

REVISION # DATE:

DFCM PROJECT NO.:
04242030
CONST DOC
FILE NAME: ABCH-A502
PLOT SCALE: 3:12
DRAWN BY: STAFF
CHECKED BY: FNM
DATE: JANUARY 24, 2006

A
502

FINISH SCHEDULE

ROOM	FLOOR	WALL	BASE	CEILING	HEIGHT	REMARKS
ENTRY VESTIBULES	THICKSET TILE/ENTRY MAT	PNTD GYP BD	CERAMIC TILE	PNTD GYP BD	14'-0"	
SALES AREA	THICKSET TILE	PNTD GYP BD	CERAMIC TILE	2 X 4 ACOUSTICAL	10'-4"	
STOREROOM	SEALED CONCRETE	PNTD GYP BD	VINYL	2 X 4 ACOUSTICAL	10'-4"	
OFFICE	VCT	PNTD GYP BD	VINYL	2 X 4 ACOUSTICAL	11'-6"	RAISED PLATFORM
STORAGE	SEALED CONCRETE	PNTD GYP BD	VINYL	2 X 4 ACOUSTICAL	11'-6"	
JANITOR'S ROOM	SEALED CONCRETE	PNTD GYP BD	VINYL	2 X 4 ACOUSTICAL	11'-6"	TILE TWO WALLS AT FLOOR SINK, SEE ELEV.
WOMEN'S TOILET	THICKSET TILE	TILE	TILE	PNTD GYP BD	8'-0"	WALL TILE FLOOR TO CEILING
MEN'S TOILET	THICKSET TILE	TILE	TILE	PNTD GYP BD	8'-0"	WALL TILE FLOOR TO CEILING
LUNCH COUNTER	SEALED CONCRETE	PNTD GYP BD	VINYL	2X4 ACOUSTICAL	10'-4"	SEE INTERIOR ELEVATIONS FOR CABINETRY
ENCLOSED DOCK	SEALED CONCRETE	PNTD GYP BD	VINYL	EXPOSED STRUCTURE	VARIES	

GLASS TYPES

- A — 1" THICK "LOW E" INSULATING GLASS: 1/4" TINTED FLOAT GLASS EXTERIOR AND 1/4" CLEAR FLOAT GLASS INTERIOR WITH 1/2" AIR SPACE.
- ACT — 1" THICK "LOW E" INSULATING GLASS: 1/4" CLEAR FLOAT TEMPERED GLASS EXTERIOR AND 1/4" CLEAR FLOAT TEMPERED GLASS INTERIOR WITH 1/2" AIR SPACE.
- P — 1/8" POLYCARBONATE AT IMPACT DOORS AND OVERHEAD DOORS (PROVIDED AND INSTALLED BY DOOR MANUFACTURER).
- S — SECURITY GLASS "LOW E": 1" THICK INSULATING GLASS: 1/4 TINTED FLOAT GLASS EXTERIOR, AND 5/16" SECURITY-LAMINATED SHEETS OF GLASS WITH INNER LAYER OF .075" VINYL OR POLYCARBONATE @ INTERIOR WITH 7/16" AIRSPACE BETWEEN INTERIOR AND EXTERIOR GLASS.
- ST — SECURITY GLASS "LOW E": 1" THICK INSULATING GLASS: 1/4 TINTED FLOAT TEMPERED GLASS EXTERIOR, AND 5/16" SECURITY-LAMINATED SHEETS OF GLASS WITH INNER LAYER OF .075" VINYL OR POLYCARBONATE @ INTERIOR WITH 7/16" AIRSPACE BETWEEN INTERIOR AND EXTERIOR GLASS.
- SCT — SECURITY GLASS "LOW E": 1" THICK INSULATING GLASS: 1/4 CLEAR FLOAT TEMPERED GLASS EXTERIOR, AND 5/16" SECURITY-LAMINATED SHEETS OF GLASS WITH INNER LAYER OF .075" VINYL OR POLYCARBONATE @ INTERIOR WITH 7/16" AIRSPACE BETWEEN INTERIOR AND EXTERIOR GLASS.

FRAME TYPES

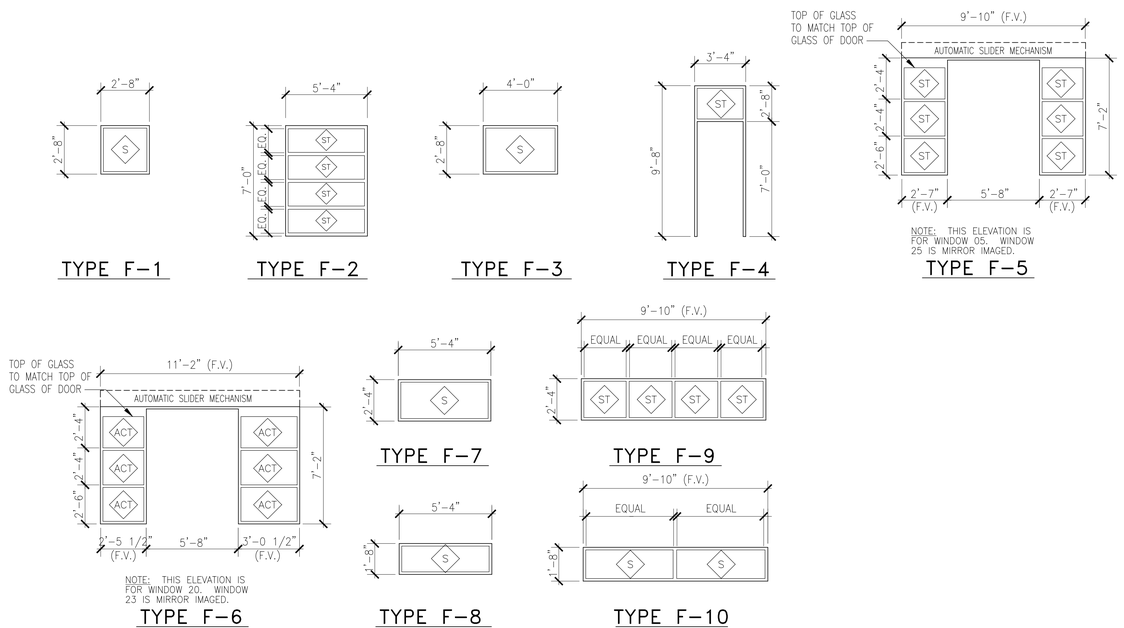

WINDOW SCHEDULE

NO.	SIZE		FRAME			GLASS	WDW	DETAIL REFERENCE				NO.	REMARKS
20	WIDTH	HEIGHT	MATERIAL	TYPE	FINISH	TYPE	BLINDS	HEAD	LEFT JAMB	RIGHT JAMB	SILL	20	CONTRACTOR TO COORDINATE ALL WINDOW DIMENSIONS WITH THE MANUFACTURER.
01	2'-8"	2'-8"	ALUM	F-1	FF	S	---	13/A501sim	13/A501	13/A501	14/A501	01	
02	2'-8"	2'-8"	ALUM	F-1	FF	S	---	13/A501sim	13/A501	13/A501	14/A501	02	
03	2'-8"	2'-8"	ALUM	F-1	FF	S	---	13/A501sim	13/A501	13/A501	14/A501	03	
04	4'-0"	2'-8"	ALUM	F-3	FF	S	---	13/A501sim	13/A501	13/A501	14/A501	04	
05	9'-10" F.V.	7'-2"	ALUM	F-5	FF	ST	---	9/A501	9/A501	9/A501	23/A501	05	
06	9'-10" F.V.	2'-4"	ALUM	F-9	FF	S	---	9/A501	9/A501	9/A501	11/A501	06	ENTRY DOOR INTEGRAL TO WDW FRAME
07	9'-10" F.V.	1'-8"	ALUM	F-10	FF	S	---	9/A501	9/A501	9/A501	9/A501sim	07	
08	5'-4"	7'-0"	ALUM	F-2	FF	S	---	11/A501	9/A501	9/A501	7/A501	08	
09	5'-4"	2'-4"	ALUM	F-7	FF	S	---	9/A501	9/A501	9/A501	11/A501	09	
10	5'-4"	1'-8"	ALUM	F-8	FF	S	---	9/A501	9/A501	9/A501	9/A501sim	10	
11	5'-4"	7'-0"	ALUM	F-2	FF	S	---	11/A501	9/A501	9/A501	7/A501	11	
12	5'-4"	2'-4"	ALUM	F-7	FF	S	---	9/A501	9/A501	9/A501	11/A501	12	
13	5'-4"	1'-8"	ALUM	F-8	FF	S	---	9/A501	9/A501	9/A501	9/A501sim	13	
14	5'-4"	7'-0"	ALUM	F-2	FF	S	---	11/A501	9/A501	9/A501	7/A501	14	
15	5'-4"	2'-4"	ALUM	F-7	FF	S	---	9/A501	9/A501	9/A501	11/A501	15	
16	5'-4"	1'-8"	ALUM	F-8	FF	S	---	9/A501	9/A501	9/A501	9/A501sim	16	
17	5'-4"	7'-0"	ALUM	F-2	FF	S	---	11/A501	9/A501	9/A501	7/A501	17	
18	5'-4"	2'-4"	ALUM	F-7	FF	S	---	9/A501	9/A501	9/A501	11/A501	18	
19	5'-4"	1'-8"	ALUM	F-8	FF	S	---	9/A501	9/A501	9/A501	9/A501sim	19	
20	11'-5" F.V.	7'-0"	ALUM.	F-6	FF	ACT	---	9/A501	10/A501	10/A501	23/A501	20	
21	5'-4"	7'-0"	ALUM	F-2	FF	ST	---	13/A501sim	13/A501	13/A501	23/A501	21	
22	3'-4"	9'-8"	HOL. MTL.	F-4	PAINTED	ST	---	16/A501sim	17/A501	17/A501	4/A501	22	TRANSOM WDW IN HM DOOR FRAME
23	11'-5" F.V.	7'-0"	ALUM.	F-6	FF	SCT	---	9/A501	10/A501	10/A501	23/A501	23	
24	5'-4"	7'-0"	ALUM	F-2	FF	ST	---	13/A501sim	13/A501	13/A501	23/A501	24	
25	9'-10" F.V.	7'-2"	ALUM	F-5	FF	ST		9/A501	9/A501	9/A501	23/A501	25	
26	9'-10" F.V.	2'-4"	ALUM	F-9	FF	S	---	9/A501	9/A501	9/A501	11/A501	26	
27	9'-10" F.V.	1'-8"	ALUM	F-10	FF	S	---	9/A501	9/A501	9/A501	9/A501sim	27	
28	4'-0"	2'-8"	ALUM	F-3	FF	S	---	13/A501sim	13/A501	13/A501	14/A501	28	
29	2'-8"	2'-8"	ALUM	F-1	FF	S	---	13/A501sim	13/A501	13/A501	14/A501	29	
30	2'-8"	2'-8"	ALUM	F-1	FF	S	---	13/A501sim	13/A501	13/A501	14/A501	30	
31	2'-8"	2'-8"	ALUM	F-1	FF	S	---	13/A501sim	13/A501	13/A501	14/A501	31	
32	2'-8"	2'-8"	ALUM	F-1	FF	S	---	13/A501sim	13/A501	13/A501	14/A501	32	
33	2'-8"	2'-8"	ALUM	F-1	FF	S	---	13/A501sim	13/A501	13/A501	14/A501	33	
34	2'-8"	2'-8"	ALUM	F-1	FF	S	---	13/A501sim	13/A501	13/A501	14/A501	34	
35	2'-8"	2'-8"	ALUM	F-1	FF	S	---	13/A501sim	13/A501	13/A501	14/A501	35	
36	2'-8"	2'-8"	ALUM	F-1	FF	S	---	13/A501sim	13/A501	13/A501	14/A501	36	
37	2'-8"	2'-8"	ALUM	F-1	FF	S	---	13/A501sim	13/A501	13/A501	14/A501	37	
38	3'-4"	9'-8"	HOL. MTL.	F-4	PAINTED	ST	---	16/A501sim	17/A501	17/A501	4/A501	38	TRANSOM WDW IN HM DOOR FRAME
39	3'-4"	9'-8"	HOL. MTL.	F-4	PAINTED	ST	---	16/A501sim	17/A501	17/A501	4/A501	39	TRANSOM WDW IN HM DOOR FRAME
40	2'-8"	2'-8"	ALUM	F-1	FF	S	---	13/A501sim	13/A501	13/A501	14/A501	40	
41	2'-8"	2'-8"	ALUM	F-1	FF	S	---	13/A501sim	13/A501	13/A501	14/A501	41	
42	2'-8"	2'-8"	ALUM	F-1	FF	S	---	13/A501sim	13/A501	13/A501	14/A501	42	
43	2'-8"	2'-8"	ALUM	F-1	FF	S	---	13/A501sim	13/A501	13/A501	14/A501	43	
44	2'-8"	2'-8"	ALUM	F-1	FF	S	---	13/A501sim	13/A501	13/A501	14/A501	44	
45	2'-8"	2'-8"	ALUM	F-1	FF	S	---	13/A501sim	13/A501	13/A501	14/A501	45	
46	2'-8"	2'-8"	ALUM	F-1	FF	S	---	13/A501sim	13/A501	13/A501	14/A501	46	

NOTE #1:SEE DETAIL 15/A501 FOR STOREFRONT MULLION AND MUNTON.

NOTE #2:SEE DETAIL 11/A501 FOR STOREFRONT TO STEEL MUNTONS AT WINDOW TYPE F-2 AND TYPE F-7.

DOOR TYPES

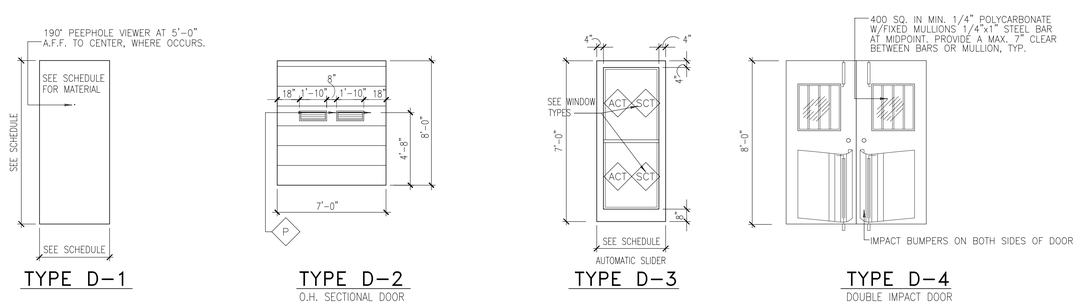

DOOR SCHEDULE

NO.	SIZE			DOOR			FRAME			DETAIL REFERENCE			HDW.	REMARKS
	WIDTH	HEIGHT	THICK.	TYPE	MATERIAL	FINISH	TYPE	MATERIAL	FINISH	HEAD	JAMB	THRESH.		
1	PR. 3'-0"	7'-0"	---	D-3	ALUM	FF	---	ALUM	FF	24/A501	9/A501	1/A501	1	AUTOMATIC SLIDERS W/SENSOR ACTIVATION
2	PR. 3'-0"	7'-0"	---	D-3	ALUM	FF	---	ALUM	FF	24/A501	8/A501	1/A501	2	AUTOMATIC SLIDERS W/SENSOR ACTIVATION
3	PR. 3'-0"	7'-0"	---	D-3	ALUM	FF	---	ALUM	FF	24/A501	8/A501	1/A501	1	AUTOMATIC SLIDERS W/SENSOR ACTIVATION
4	PR. 3'-0"	7'-0"	---	D-3	ALUM	FF	---	ALUM	FF	24/A501	9/A501	1/A501	2	AUTOMATIC SLIDERS W/SENSOR ACTIVATION
5	3'-0"	7'-0"	---	D-1	SCW	STAIN	---	HM	PNTD	20/A501	20/A501	5/A501	5	
6	3'-0"	7'-0"	---	D-1	SCW	STAIN	---	HM	PNTD	20/A501	20/A501	5/A501	5	
7	3'-0"	7'-0"	---	D-1	SCW	STAIN	---	HM	PNTD	20/A501	20/A501	5/A501	4	
8	PR 3'-0"	8'-0"	---	D-4	IMPACT	FF	---	HM	PNTD	18/A501	17/A501(SIM)	--	6	STEEL FRAME
9	3'-0"	7'-0"	---	D-1	HM	PNTD	---	HM	PNTD	25/A501	17/A501	4/A501	7	PROVIDE WITH PEEPHOLE
10	3'-0"	7'-0"	---	D-1	HM	PNTD	---	HM	PNTD	25/A501	17/A501	4/A501	7	PROVIDE WITH PEEPHOLE
11	7'-0"	8'-0"	---	D-2	SEE SPECS	FF	---	STEEL	PNTD	19/A501	19/A501	1/A502	8	INSULATED OVERHEAD SECTIONAL DOOR
12	3'-0"	7'-0"	---	D-1	HM	PNTD	---	HM	PNTD	25/A501	17/A501	4/A501	7	PROVIDE WITH PEEPHOLE
13	3'-0"	7'-0"	---	D-1	SCW	STAIN	---	HM	PNTD	20/A501	20/A501	5/A501	4	

NEW HARRISVILLE LIQUOR STORE

DEPARTMENT OF ALCOHOLIC BEVERAGE CONTROL
1455 SOUTH WALL AVENUE, HARRISVILLE, UTAH

DOOR, WINDOW AND FINISH SCHEDULES

FRANK N MURDOCK JR ■ Architect & Associates
975 East 100 South Suite 100, Salt Lake City, Utah 84102 TEL: (801) 532-4441 FAX (801) 532-4220

REVISION # DATE:

DFCM PROJECT NO.:
04242030
CONST DOC
FILE NAME: ABCH-A601
PLOT SCALE: 1:1
DRAWN BY: STAFF
CHECKED BY: FNM
DATE: JANUARY 24, 2006

A
601

PROJECT INFORMATION

OWNER: STATE OF UTAH
DIVISION OF FACILITIES
CONSTRUCTION AND MANAGEMENT
4110 STATE OFFICE BUILDING
SALT LAKE CITY, UTAH 84114

ARCHITECT: FRANK N MURDOCK JR
ARCHITECT + ASSOCIATES
975 EAST 100 SOUTH
SALT LAKE CITY, UTAH 84102

PROPOSED USE
STATE LIQUOR STORE

PROPOSED ADDRESS
1455 SOUTH WALL AVENUE, HARRISVILLE, UTAH

SITE INFORMATION (NOT FOR MATERIAL TAKE OFF USE)
TOTAL SITE: 1.25 ACRES (54,470 SQ FT ±)

BUILDING FOOTPRINT:	8,410 SQ FT	15%
HARD SURFACE AREA:	36,722 SQ FT	67%
LANDSCAPING AREA:	9,338 SQ FT	18%

PARKING INFORMATION
CUSTOMER &
EMPLOYEE PARKING: 42 PARKING STALLS
1 STALL / 200 SQ FT OF GROSS AREA

SITE DRAWINGS

SEE SHEET AS101 FOR GENERAL SITE DEMOLITION PLAN AND NEW SITE PLAN
SEE SHEET AS102 FOR SITE GRADING AND STORM SEWER INFORMATION
SEE SHEET AS103 FOR SITE UTILITY INFORMATION
SEE SHEET AS501 FOR SITE DETAIL INFORMATION

SITE PLAN LEGEND

- CATCH BASIN
- STORM DRAIN MAN HOLE
- POWER POLE
- WATER VALVE
- ELECTRIC BOX
- FIRE HYDRANT
- SANITARY SEWER MAN HOLE
- LIGHT POST
- STREET LIGHT BOX
- GAS METER
- TELEPHONE BOX
- PL — PROPERTY LINE
- L — LANDSCAPE AREA
- SW — SIDEWALK

- T.O.G — TOP OF GRATE
- I.E. — INVERT ELEVATION
- T.O.SW — TOP OS SIDEWALK
- T.O.PV — TOP OF PAVEMENT
- T.O.C. — TOP OF CONCRETE
- OVERHEAD TRANSMISSION LINE
- UNDERGROUND POWER
- SS — SANITARY SEWER
- W — WATER LINE
- T — TELEPHONE LINE
- G — GAS LINE
- C — CABLE T.V.
- PARKING STALLS

- FENCE
- 2 – 4" PVC PIPE SLEEVE
- 4434 — EXISTING GRADE CONTOUR
- 31 — NEW GRADE CONTOUR
- CENTER LINE OF ROAD
- X — NEW SECURITY FENCE
- A / B — SIGN TYPES – SEE 2/AS501
- NEW CONCRETE PAVING AND SIDEWALKS

GENERAL NOTES

1. REFER TO SITE DEVELOPMENT, LANDSCAPE, MECHANICAL AND ELECTRICAL DRAWINGS FOR DIMENSIONS AND ADDITIONAL SITE INFORMATION.
2. CONTRACTOR TO VERIFY ALL EXISTING SITE CONDITIONS. NOTIFY ARCHITECT OF ANY DISCREPANCIES TO THE CONTRACT DOCUMENTS.
3. PROVIDE POSITIVE DRAINAGE AWAY FROM BUILDING AT ALL POINTS.
4. CONTRACTOR SHALL NOT PARK, STORE EQUIPMENT, OR USE THE EXISTING ROAD FOR ANY PURPOSE OTHER THAN ACCESS TO THE PROJECT SITE. CONTRACTOR SHALL NOT DISTURB OR USE ANY AREA OUTSIDE CONTRACT LIMIT LINE TO PARK OR STORE EQUIPMENT. UNLESS OTHERWISE NOTED, THE PROPERTY LINE SHALL FORM THE BOUNDARY OF THE CONTRACT LIMIT LINE.
5. CONTRACTOR WILL MAINTAIN AND PROTECT ALL EXISTING UTILITIES DURING CONSTRUCTION.
6. ALL CUTTING, PATCHING, EXCAVATION AND BACKFILL DONE IN STREET SHALL BE DONE IN ACCORDANCE WITH UTAH DEPARTMENT OF TRANSPORTATION SPECIFICATIONS.
7. PROVIDE PIPE SLEEVES WHERE SPRINKLER LINES PASS UNDER ASPHALT PAVEMENT OR RETAINING WALLS.
8. PROTECT ANY EXISTING STORM DRAINS FROM MUD AND DEBRIS DURING CONSTRUCTION.

UDOT NOTES

The following UDOT Notes will be called out on the plan:

a) Work on the UDOT right-of-way is restricted from October 15 through April 15.

b) Any new pavement markings or pavement markings that are removed from the highway are to be replaced with in-kind materials such as 3M tape, epoxy, thermoplastic, etc. All paint lines are to be installed with permanent paint application before completion of the permit and must have at least 6 months life as determined by UDOT's permits officer.

c) Before commencing work on the State highway, the contractor who is awarded the project must have a performance bond on file with UDOT, and obtain an encroachment permit from the Region Two Permits Office.

d) Work is not allowed on the right-of-way during the AM/PM peak traffic hours (6:00-9:00 AM and 3:30-6:00 PM).

DEMOLITION AND SITE CLEARING

IT IS THE INTENT OF THIS PROJECT TO REMOVE AND PROPERLY DISPOSE OF ALL EXISTING IMPROVEMENTS ON THE PROPERTY. THE SITE SHOULD THEN BE GRUBBED IN ACCORDANCE WITH THE REQUIREMENTS OF THE SOILS REPORT AND PREPARED FOR NEW CONSTRUCTION.

REFERENCE NOTES

1. REMOVE AND PROPERLY DISPOSE OF EXISTING BUILDING INCLUDING ALL FOOTINGS, FOUNDATIONS, AND ASSOCIATED UNDERGROUND CONCRETE.
2. REMOVE AND PROPERLY DISPOSE OF EXISTING LANDSCAPING INCLUDING ALL TREES AND SHRUBS ON SITE. SEE SOILS REPORT FOR THE DEPTH OF GRUBBING IN THIS AREA. AND SHRUBS ON SITE. SEE SOILS REPORT FOR THE DEPTH OF GRUBBING IN THIS AREA.
3. REMOVE AND PROPERLY DISPOSE OF EXISTING CONCRETE SIDEWALK OR PAD.
4. REMOVE AND PROPERLY DISPOSE OF ALL EXISTING ASPHALT CONCRETE PAVING. ON SITE.
5. CAP EXISTING WATER LINE AT THE EXISTING METER OR AS DIRECTED BY SERVICE PROVIDER. COORDINATE THE REMOVAL OF EXISTING METERS WITH THE UTILITY PROVIDER.
6. CAP EXISTING SANITARY SEWER LINE AT THE MAIN LINE OR AS DIRECTED BY SERVICE PROVIDER.
7. CAP EXISTING NATURAL GAS LINE AT THE MAIN LINE OR AS DIRECTED BY SERVICE PROVIDER. COORDINATE THE REMOVAL OF EXISTING METERS WITH THE UTILITY PROVIDER.
8. REMOVE AND PROPERLY DISPOSE OF ALL EXISTING ELECTRICAL LINES AND ASSOCIATED SITE LIGHTING, PANELS AND METERS LOCATED ON SITE WHICH ARE NOT USED AS PART OF THIS PROJECT AND WHICH DO NOT PROVIDE SERVICE TO ADJACENT PROPERTIES. SEE ELECTRICAL DRAWINGS FOR NEW SERVICE CONNECTION AND LOCATION.
9. REMOVE AND PROPERLY DISPOSE OF EXISTING WOOD OR CHAIN LINK FENCE.
10. MAINTAIN AND PROTECT EXISTING FENCES AT THE PROPERTY LINES UNTIL NEW ARE INSTALLED.

- A — MAINTAIN AND PROTECT EXISTING SITE ELEMENTS TO REMAIN INCLUDING EXISTING RETAINING WALLS, FENCES, STORM DRAIN BASIN AND CURBS AND GUTTERS.
- B — NEW CONCRETE CURB & GUTTER. SEE DETAIL 6/AS501
- C — NEW 4" THICK CONCRETE SIDEWALK. SEE DETAILS 11, 12 & 13 SHEET AS501 ALIGN WITH EDGES AND ELEVATIONS OF EXISTING SIDEWALKS WHERE NEW AND OLD SIDEWALKS MEET.
  JOINTS AS NOTED BELOW TYPICAL UNLESS NOTED OTHERWISE
  CONTROL JOINT IN CONCRETE SIDEWALK:
  @ 5'-0" O.C. – SEE DETAIL 12/AS501.
  EXPANSION JOINT IN CONCRETE SIDEWALK
  @ 20'-0" O.C. – SEE DETAIL 13/AS501.
- D — NEW ASPHALT CONCRETE PAVING. SEE DETAIL 10/AS501 FOR PAVEMENT SECTION. SEE SOILS REPORT FOR DEPTH OF FILL AND COMPACTION REQUIREMENTS IN THIS AREA.
- E — NEW OPEN CONCRETE DRIVEWAY TO COMPLY WITH UTAH DEPARTMENT OF TRANSPIRATION STANDARDS – STANDARD DRAWING GW 4.
- F — NEW DRY SUMP CATCH BASIN SEE DETAIL 2/AS103
- G — NEW PARKING STRIPING SEE DETAIL 3/AS501
- H — NEW TINTED CMU WALL. MINIMUM 8' HIGH ABOVE ADJACENT FINISHED GRADE.
- J — NEW 6' HIGH VINYL PRIVACY FENCE. (BLUFFTECH WINCHESTER PICKET STYLE 7/8" X 7" TOUNGE AND GROOVE OR APPROVED EQUAL.) FROM THE EAST FACE OF THE BRAKE SHOP TO THE WEST PROPERTY LINE. (APPROXIMATELY 294'-0") CONSTRUCT FENCE AS CLOSE AS POSSIBLE TO EXISTING FENCES ON SOUTH PROPERTY LINE.
- K — NEW CONCRETE CURB AND GUTTER TO COMPLY WITH UDOT STANDARD DRAWING GW 2 (TYPE B1).
  ALIGN WITH EDGES AND ELEVATIONS OF EXISTING ASPHALT ROADWAY. WHERE NEW AND OLD ASPHALT MEET. MATCH ELEVATION AND FLOW LINE OF EXISTING ASPHALT.
- L — NEW 8" THICK CONCRETE DRIVE OR APRON. SEE 5/AS501
  CONCRETE AT APRONS AND DRIVES (INCLUDING SIDEWALK AT DRIVE) TO BE MINIMUM 8" THICK.
- M — NEW CONCRETE SPLASH BLOCK.
- N — NEW LANDSCAPE AREA – SEE SHEET LS-101
- O — PROVIDE AND INSTALL NEW FIRE HYDRANT PER HARRISVILLE CITY STANDARDS COORDINATE CONNECTION OF NEW 6" WATER LINE TO EXISTING 6" LINE WITH UTILITY COMPANY.
- P — PROVIDE AND INSTALL DUMPSTER ENCLOSURE, 6' HIGH CHAIN LINK FENCE, WITH TWO 6' HIGH HINGED GATES, WITH VERTICAL SCREENING SLATS IN FENCE AND GATES.
- Q — MONUMENT SIGN BY OWNER. ELECTRICAL SERVICE PROVIDED UNDER THIS CONTRACT
- R — PROVIDE AND INSTALL 145' OF SIDEWALK 5' WIDE X 4" THICK EXACT LOCATION AS DRECTED BY UDOT & HARRISVILLE CITY
- S — SAW CUT EXISTING ASPHALT MIN 24" BACK FROM EXISTING EDGES. FEATHER NEW ASPHALT INTO EXISTING PER UDOT STANDARDS. ALL ASPHALT WORK AT EXISTING ROAD IS TO BE INSTALLED PER UDOT STANDARDS.

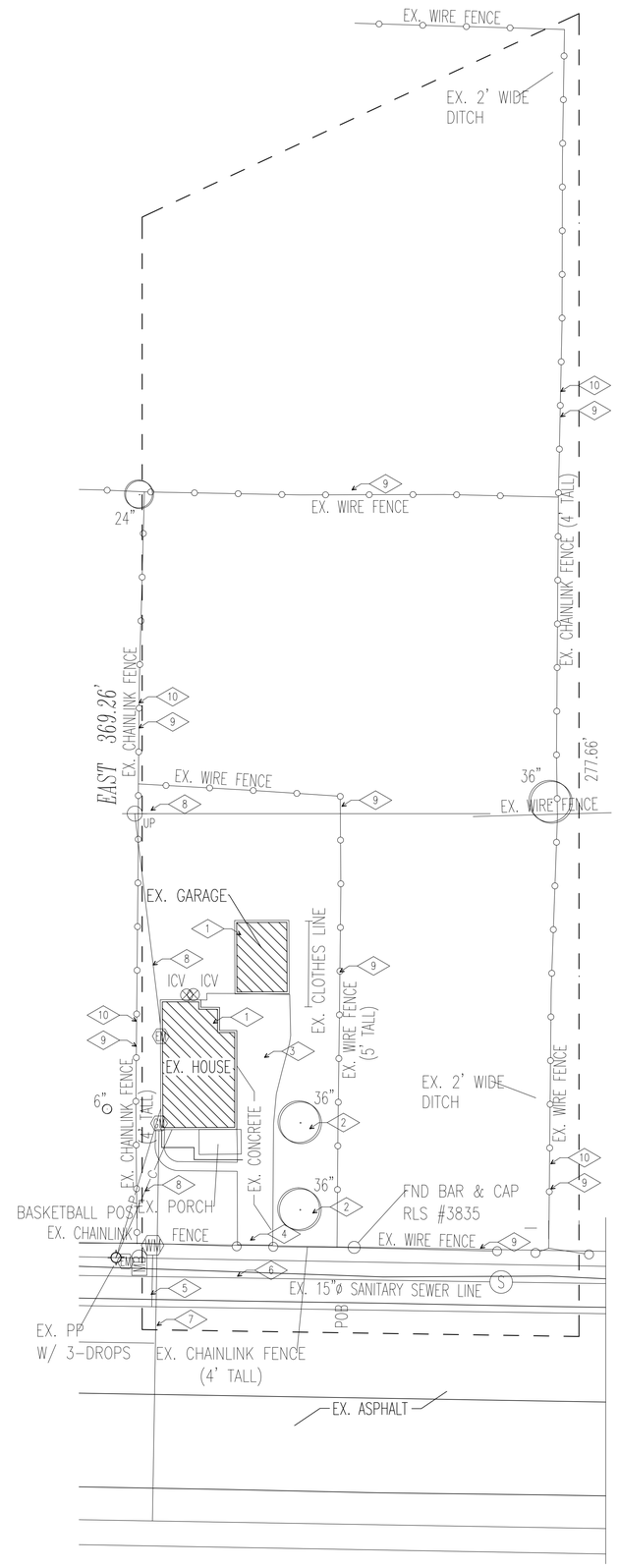

DEMOLITION SITE PLAN

SCALE: 1" = 20'
0 10' 20' 40'

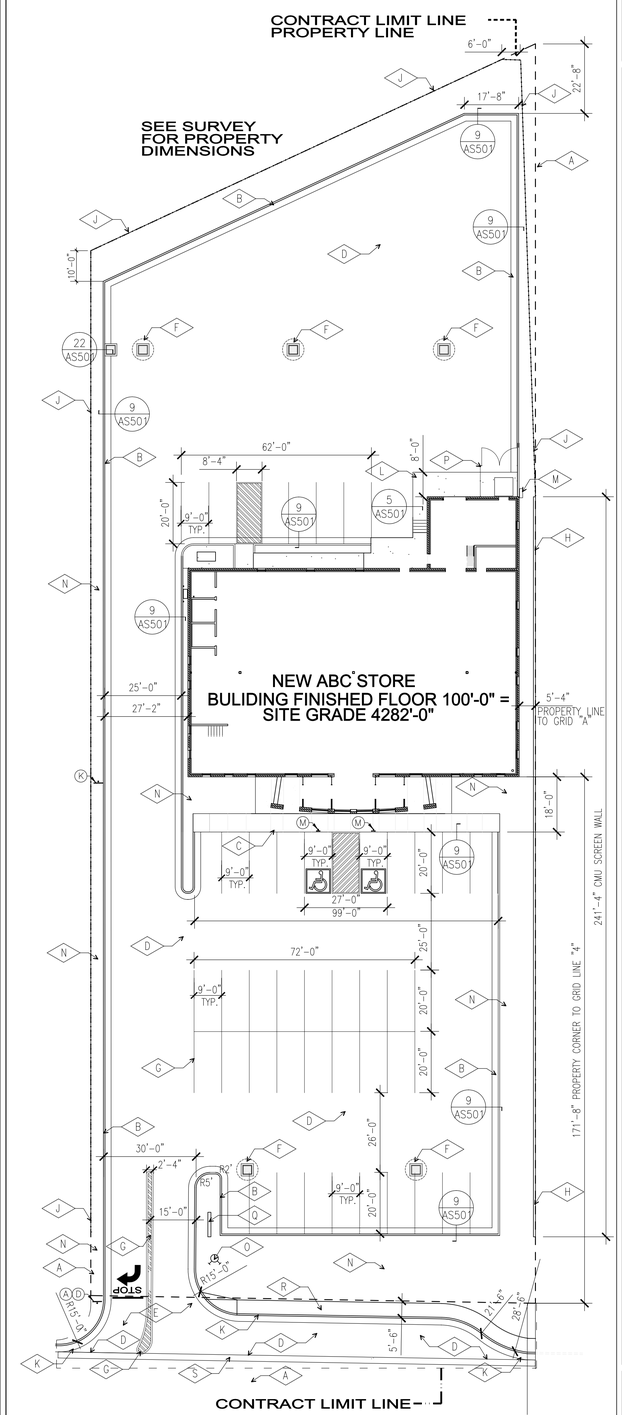

SITE PLAN

SCALE: 1" = 20'
0 10' 20' 40'

NEW HARRISVILLE LIQUOR STORE

DEPT OF ALCOHOLIC BEVERAGE CONTROL
1455 SOUTH WALL AVENUE, HARRISVILLE, UTAH

FRANK N MURDOCK JR ■ Architect & Associates
975 East 100 South Suite 100, Salt Lake City, Utah 84102 TEL: (801) 532-4441 FAX (801) 532-4220

SITE PLAN AND SITE DEMOLITION PLAN

REVISION #	DATE:
1	10/7/03
2	04/06/04

DFCM PROJECT NO.:
0424030
CONST. DWG
FILE NAME: ABCH-AS101
PLOT SCALE: 1:240
DRAWN BY: STAFF
CHECKED BY: FNM
DATE: JAN 24, 2006

AS 101

PROJECT INFORMATION

OWNER: STATE OF UTAH
DIVISION OF FACILITIES
CONSTRUCTION AND MANAGEMENT
4110 STATE OFFICE BUILDING
SALT LAKE CITY, UTAH 84114

ARCHITECT: FRANK N MURDOCK JR
ARCHITECT + ASSOCIATES
975 EAST 100 SOUTH
SALT LAKE CITY, UTAH 84102

PROPOSED USE
STATE LIQUOR STORE

PROPOSED ADDRESS
433 NORTH MAIN, TOOELE, UTAH

SITE INFORMATION (NOT FOR MATERIAL TAKE OFF USE)
TOTAL SITE: 1.384 ACRES (60,277 SQ FT ±)

BUILDING FOOTPRINT:	11,375 SQ FT	18.9%
HARD SURFACE AREA:	32,300 SQ FT	53.6%
LANDSCAPING AREA:	16,612 SQ FT	27.5%

PARKING INFORMATION
CUSTOMER &
EMPLOYEE PARKING: 71 PARKING STALLS
1 STALL / 160 SQ FT OF GROSS AREA

SITE DRAWINGS

SEE SHEET AS101 FOR GENERAL SITE DEMOLITION PLAN AND NEW SITE PLAN
SEE SHEET AS102 FOR SITE GRADING AND STORM SEWER INFORMATION
SEE SHEET AS103 FOR SITE UTILITY INFORMATION
SEE SHEET AS501 FOR SITE DETAIL INFORMATION

SITE PLAN LEGEND

- CATCH BASIN
- STORM DRAIN MAN HOLE
- POWER POLE
- WATER VALVE
- ELECTRIC BOX
- FIRE HYDRANT
- SANITARY SEWER MAN HOLE
- LIGHT POST
- STREET LIGHT BOX
- GAS METER
- TELEPHONE BOX
- PL — PROPERTY LINE
- L — LANDSCAPE AREA
- SW — SIDEWALK

- T.O.G — TOP OF GRATE
- I.E. — INVERT ELEVATION
- T.O.SW — TOP OS SIDEWALK
- T.O.PV — TOP OF PAVEMENT
- T.O.C. — TOP OF CONCRETE
- OVERHEAD TRANSMISSION LINE
- UNDERGROUND POWER
- SS — SANITARY SEWER
- W — WATER LINE
- T — TELEPHONE LINE
- G — GAS LINE
- C — CABLE T.V.
- PARKING STALLS

- FENCE
- 2 – 4" PVC PIPE SLEEVE
- 4434 — EXISTING GRADE CONTOUR
- 31 — NEW GRADE CONTOUR
- CENTER LINE OF ROAD
- X — NEW SECURITY FENCE
- A / B — SIGN TYPES – SEE 2/AS501
- NEW CONCRETE PAVING AND SIDEWALKS

GENERAL NOTES

1. REFER TO SITE DEVELOPMENT, LANDSCAPE, MECHANICAL AND ELECTRICAL DRAWINGS FOR DIMENSIONS AND ADDITIONAL SITE INFORMATION.
2. CONTRACTOR TO VERIFY ALL EXISTING SITE CONDITIONS. NOTIFY ARCHITECT OF ANY DISCREPANCIES TO THE CONTRACT DOCUMENTS.
3. PROVIDE POSITIVE DRAINAGE AWAY FROM BUILDING AT ALL POINTS.
4. CONTRACTOR SHALL NOT PARK, STORE EQUIPMENT, OR USE THE EXISTING ROAD FOR ANY PURPOSE OTHER THAN ACCESS TO THE PROJECT SITE. CONTRACTOR SHALL NOT DISTURB OR USE ANY AREA OUTSIDE CONTRACT LIMIT LINE TO PARK OR STORE EQUIPMENT. UNLESS OTHERWISE NOTED, THE PROPERTY LINE SHALL FORM THE BOUNDARY OF THE CONTRACT LIMIT LINE.
5. CONTRACTOR WILL MAINTAIN AND PROTECT ALL EXISTING UTILITIES DURING CONSTRUCTION.
6. ALL CUTTING, PATCHING, EXCAVATION AND BACKFILL DONE IN STREET SHALL BE DONE IN ACCORDANCE WITH UTAH DEPARTMENT OF TRANSPORTATION SPECIFICATIONS.
7. PROVIDE PIPE SLEEVES WHERE SPRINKLER LINES PASS UNDER ASPHALT PAVEMENT OR RETAINING WALLS.
8. PROTECT ANY EXISTING STORM DRAINS FROM MUD AND DEBRIS DURING CONSTRUCTION.

SANITARY SEWER NOTES

1. ALL SANITARY SEWER CONSTRUCTION SHALL COMPLY WITH LOCAL SEWER DISTRICT'S DESIGN STANDARDS AND CONSTRUCTION SPECIFICATIONS.
2. CONTRACTOR SHALL FIELD VERIFY LOCATIONS AND INVERT ELEVATIONS OF EXISTING MANHOLES AND OTHER UTILITIES BEFORE STAKING OR CONSTRUCTION OF ANY SEWER LINES.

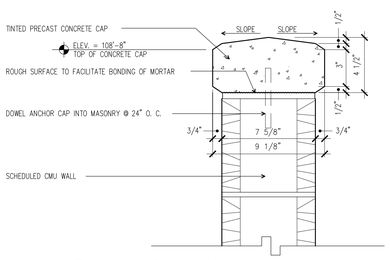

2 / AS102 WALL CAP DETAIL
SCALE: 3" = 1'-0"

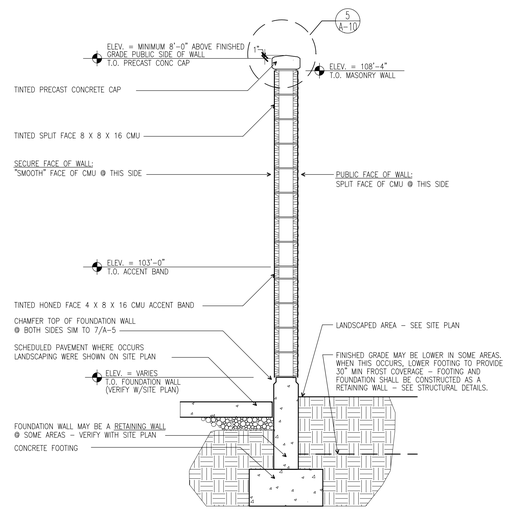

1 / AS102 WALL SECTION
SCALE: 3/4" = 1'-0"

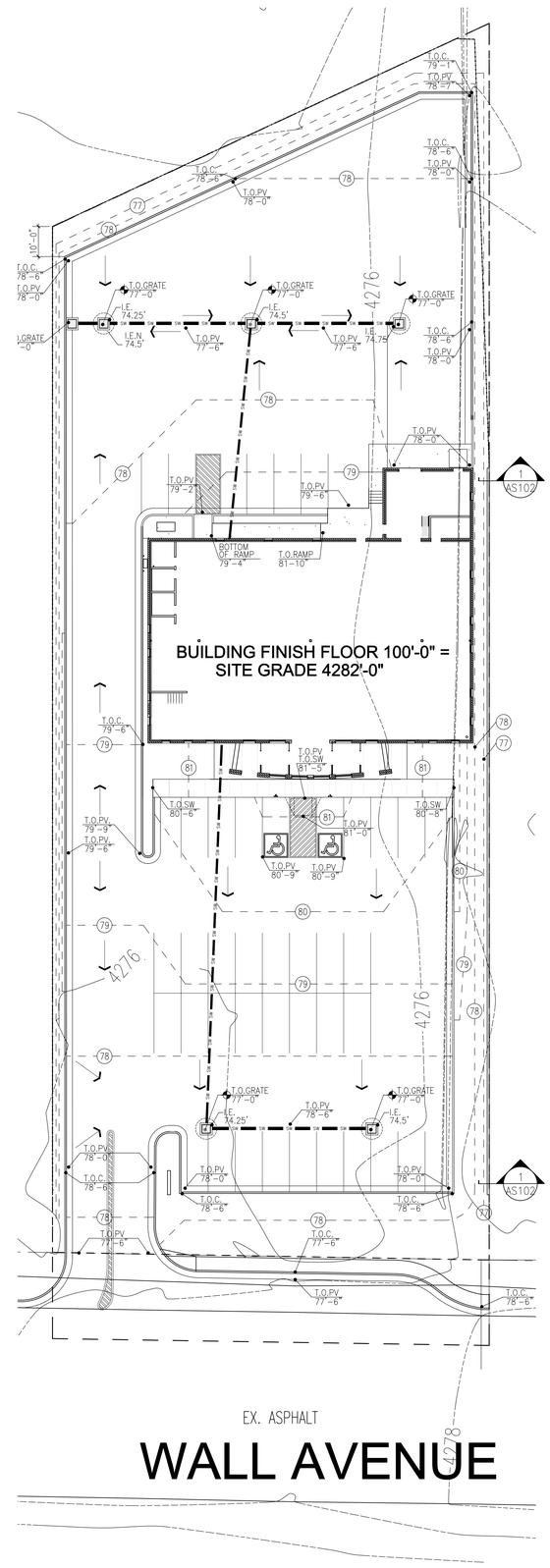

SITE GRADING PLAN

SCALE: 1" = 20'
0 10' 20' 40'

NEW HARRISVILLE LIQUOR STORE
DEPARTMENT OF ALCOHOLIC BEVERAGE CONTROL
1455 SOUTH WALL AVENUE, HARRISVILLE, UTAH

FRANK N MURDOCK JR ■ Architect & Associates
975 East 100 South Suite 100, Salt Lake City, Utah 84102 TEL: (801) 532-4441 FAX (801) 532-4220

SITE GRADING PLAN

REVISION # DATE:

DFCM PROJECT NO.:
04242030
CONSTR. DOC.
FILE NAME: ABCH-AS102
PLOT SCALE: 1:240
DRAWN BY: STAFF
CHECKED BY: FNM
DATE: JANUARY 24, 2006

AS 102

PROJECT INFORMATION

OWNER: STATE OF UTAH
DIVISION OF FACILITIES
CONSTRUCTION AND MANAGEMENT
4110 STATE OFFICE BUILDING
SALT LAKE CITY, UTAH 84114

ARCHITECT: FRANK N MURDOCK JR
ARCHITECT + ASSOCIATES
975 EAST 100 SOUTH
SALT LAKE CITY, UTAH 84102

PROPOSED USE
STATE LIQUOR STORE

PROPOSED ADDRESS
433 NORTH MAIN, TOOELE, UTAH

SITE INFORMATION (NOT FOR MATERIAL TAKE OFF USE)
TOTAL SITE: 1.384 ACRES (60,277 SQ FT ±)

BUILDING FOOTPRINT:	11,375 SQ FT	18.9%
HARD SURFACE AREA:	32,300 SQ FT	53.6%
LANDSCAPING AREA:	16,612 SQ FT	27.5%

PARKING INFORMATION
CUSTOMER &
EMPLOYEE PARKING: 71 PARKING STALLS
1 STALL / 160 SQ FT OF GROSS AREA

SITE DRAWINGS

SEE SHEET AS101 FOR GENERAL SITE DEMOLITION PLAN AND NEW SITE PLAN
SEE SHEET AS102 FOR SITE GRADING AND STORM SEWER INFORMATION
SEE SHEET AS103 FOR SITE UTILITY INFORMATION
SEE SHEET AS501 FOR SITE DETAIL INFORMATION

SITE PLAN LEGEND

- CATCH BASIN
- STORM DRAIN MAN HOLE
- POWER POLE
- WATER VALVE
- ELECTRIC BOX
- FIRE HYDRANT
- SANITARY SEWER MAN HOLE
- LIGHT POST
- STREET LIGHT BOX
- GAS METER
- TELEPHONE BOX
- PL — PROPERTY LINE
- L — LANDSCAPE AREA
- SW — SIDEWALK
- T.O.G — TOP OF GRATE
- I.E. — INVERT ELEVATION
- T.O.SW — TOP OS SIDEWALK
- T.O.PV — TOP OF PAVEMENT
- T.O.C. — TOP OF CONCRETE
- OVERHEAD TRANSMISSION LINE
- UNDERGROUND POWER
- SS — SANITARY SEWER
- W — WATER LINE
- T — TELEPHONE LINE
- G — GAS LINE
- C — CABLE T.V.
- PARKING STALLS
- FENCE
- 2 – 4" PVC PIPE SLEEVE
- 4434 — EXISTING GRADE CONTOUR
- 31 — NEW GRADE CONTOUR
- CENTER LINE OF ROAD
- X — NEW SECURITY FENCE
- A / B — SIGN TYPES – SEE 2/AS501
- NEW CONCRETE PAVING AND SIDEWALKS

GENERAL NOTES

1. REFER TO SITE DEVELOPMENT, LANDSCAPE, MECHANICAL AND ELECTRICAL DRAWINGS FOR DIMENSIONS AND ADDITIONAL SITE INFORMATION.
2. CONTRACTOR TO VERIFY ALL EXISTING SITE CONDITIONS. NOTIFY ARCHITECT OF ANY DISCREPANCIES TO THE CONTRACT DOCUMENTS.
3. PROVIDE POSITIVE DRAINAGE AWAY FROM BUILDING AT ALL POINTS.
4. CONTRACTOR SHALL NOT PARK, STORE EQUIPMENT, OR USE THE EXISTING ROAD FOR ANY PURPOSE OTHER THAN ACCESS TO THE PROJECT SITE. CONTRACTOR SHALL NOT DISTURB OR USE ANY AREA OUTSIDE CONTRACT LIMIT LINE TO PARK OR STORE EQUIPMENT. UNLESS OTHERWISE NOTED, THE PROPERTY LINE SHALL FORM THE BOUNDARY OF THE CONTRACT LIMIT LINE.
5. CONTRACTOR WILL MAINTAIN AND PROTECT ALL EXISTING UTILITIES DURING CONSTRUCTION.
6. ALL CUTTING, PATCHING, EXCAVATION AND BACKFILL DONE IN STREET SHALL BE DONE IN ACCORDANCE WITH UTAH DEPARTMENT OF TRANSPORTATION SPECIFICATIONS.
7. PROVIDE PIPE SLEEVES WHERE SPRINKLER LINES PASS UNDER ASPHALT PAVEMENT OR RETAINING WALLS.
8. PROTECT ANY EXISTING STORM DRAINS FROM MUD AND DEBRIS DURING CONSTRUCTION.
9. NEW WATER METER TO BE INSTALLED PER HARRISVILLE CITY STANDARDS.

UTILITY FEES

1. THE CONTRACTOR IS RESPONSIBLE FOR ALL UTILITY CONNECTION AND PERMIT FEES. CHARGES FOR IMPACT FEES BY UTILITIES OR MUNICIPALITIES ARE NOT TO BE CHARGED TO OR PAID BY THE CONTRACTOR OR THE STATE OF UTAH FOR STATE FACILITIES.

SANITARY SEWER NOTES

1. ALL SANITARY SEWER CONSTRUCTION SHALL COMPLY WITH LOCAL SEWER DISTRICT'S DESIGN STANDARDS AND CONSTRUCTION SPECIFICATIONS.
2. CONTRACTOR SHALL FIELD VERIFY LOCATIONS AND INVERT ELEVATIONS OF EXISTING MANHOLES AND OTHER UTILITIES BEFORE STAKING OR CONSTRUCTION OF ANY SEWER LINES.

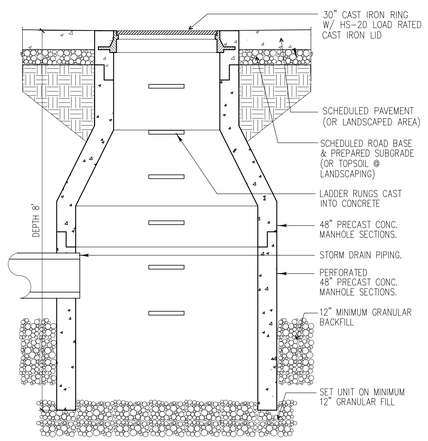

NOTE: DRY SUMP MUST BE INSTALLED IN AN AREA WITH SOIL OF GOOD PERCOLATION. COORDINATE DEPTH OF DRY SUMP w/ SOIL CONDITIONS AND FREE DRAINING SOIL STRATA.

2 / AS103 **DRY SUMP SECTION**
SCALE: 3/4" = 1'-0"
SITE-015

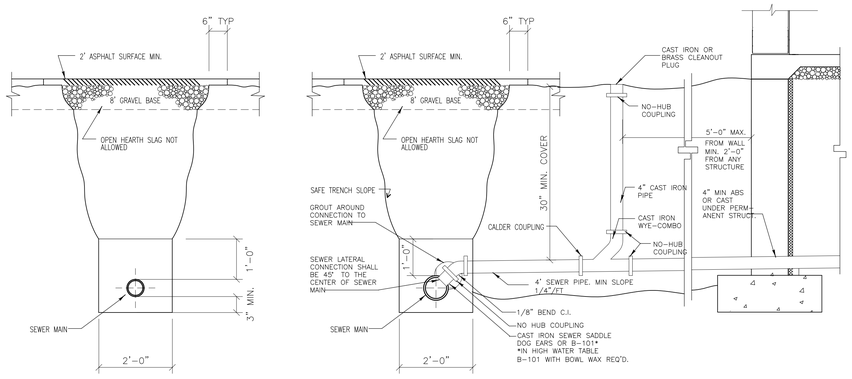

1 / AS103 **STANDARD SEWER LATERAL CONNECTION**
SCALE: NOT TO SCALE

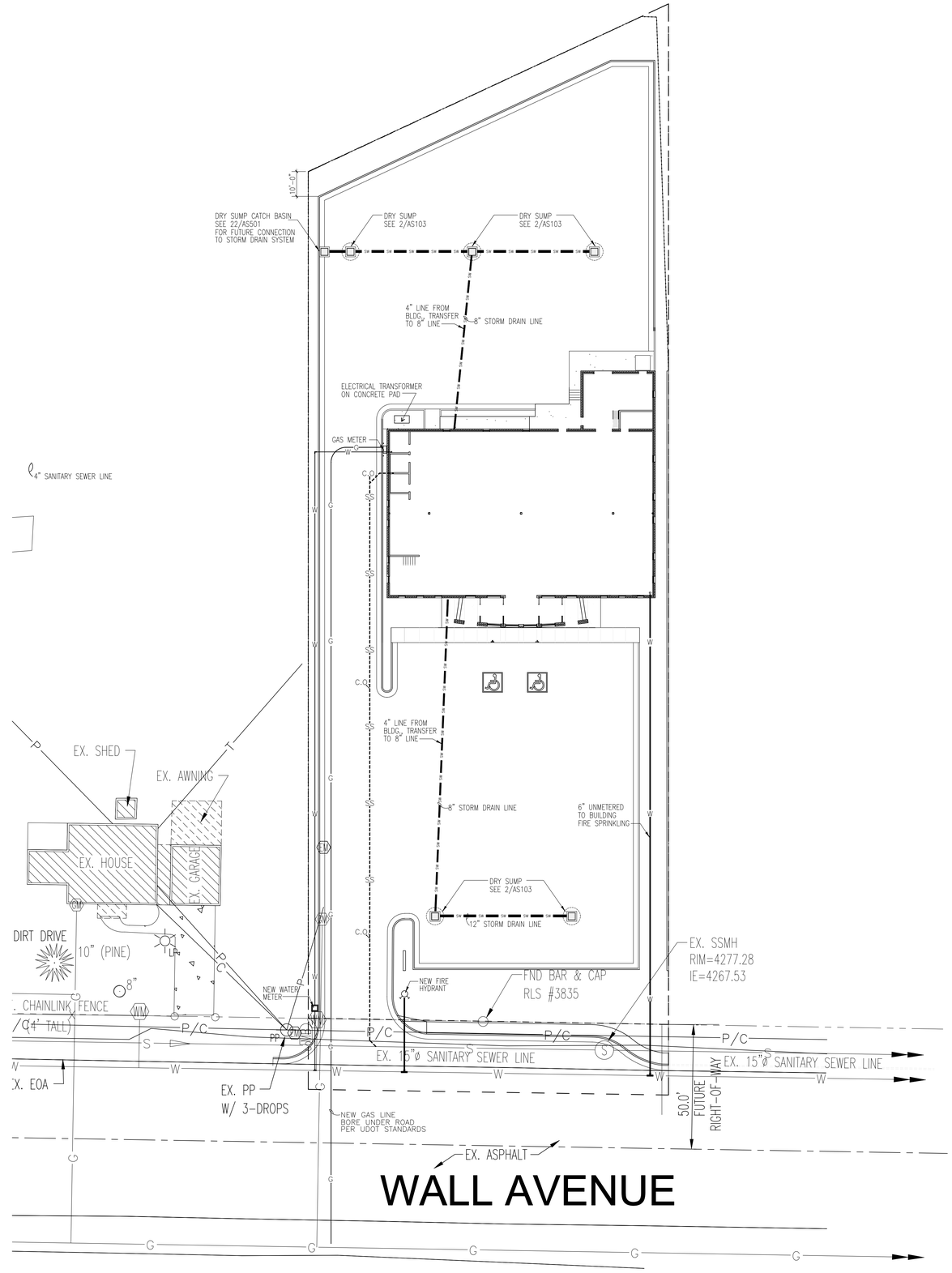

SITE GRADING PLAN

SCALE: 1" = 20'
0 10' 20' 40'

NEW HARRISVILLE LIQUOR STORE
DEPARTMENT OF ALCOHOLIC BEVERAGE CONTROL
1455 SOUTH WALL AVENUE, HARRISVILLE, UTAH

SITE UTILITY PLAN

FRANK N MURDOCK JR ■ Architect & Associates
975 East 100 South Suite 100, Salt Lake City, Utah 84102 TEL: (801) 532-4441 FAX (801) 532-4220

REVISION # DATE:

DFCM PROJECT NO.: 04242030
CONSTR. DOC.
FILE NAME: ABCH-AS103
PLOT SCALE: 1:240
DRAWN BY: STAFF
CHECKED BY: FNM
DATE: JANUARY 24, 2006

AS 103

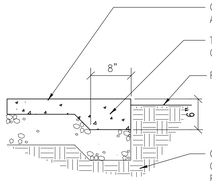

25 AS501 CONCRETE EDGE DETAIL
SCALE: 1" = 1'-0"

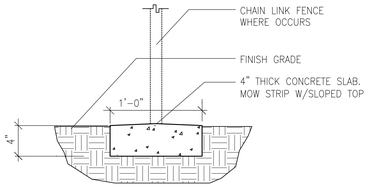

24 AS501 CONCRETE MOW STRIP DETAIL
SCALE: NOT TO SCALE

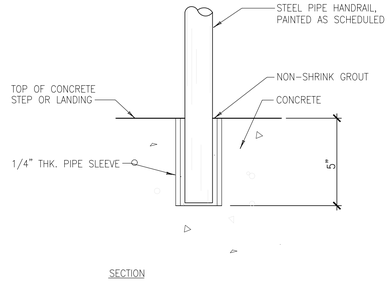

23 AS501 PIPE RAIL ANCHORING DETAIL
SCALE: NOT TO SCALE

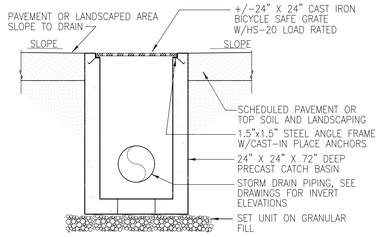

22 AS501 DRY SUMP CATCH BASIN
SCALE: NOT TO SCALE

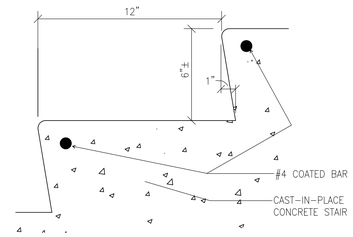

21 AS501 STAIR NOSING SECTION
SCALE: NOT TO SCALE

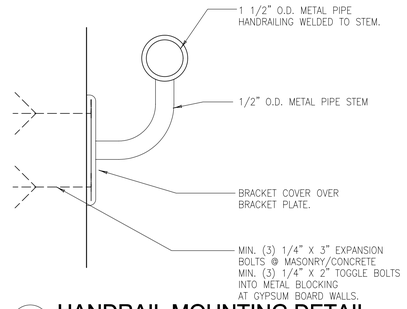

20 AS501 HANDRAIL MOUNTING DETAIL
SCALE: NOT TO SCALE

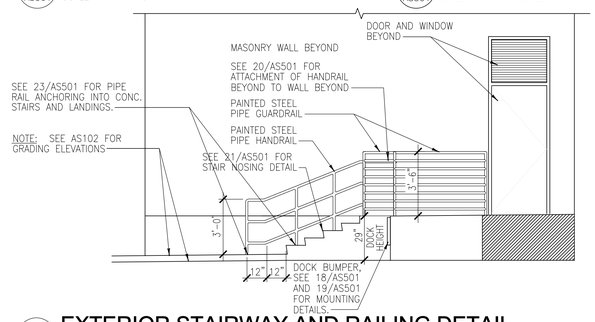

16 AS501 EXTERIOR STAIRWAY AND RAILING DETAIL
SCALE: NOT TO SCALE

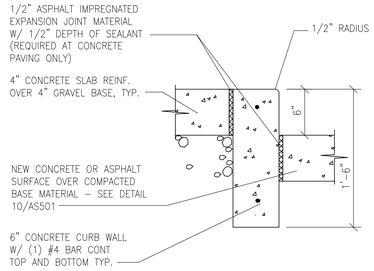

17 AS501 CONCRETE CURB DETAIL
SCALE: NOT TO SCALE

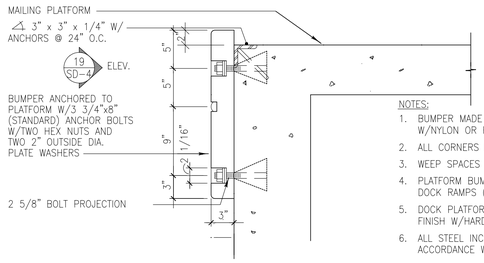

NOTES:
1. BUMPER MADE OF RUBBER REINFORCED W/NYLON OR RAYON OR A COMBINATION OF BOTH.
2. ALL CORNERS ROUNDED.
3. WEEP SPACES BETWEEN BUMPERS 3/4" MIN.-1 3/8" MAX.
4. PLATFORM BUMPERS WILL NOT BE POSITIONED WHERE DOCK RAMPS (FLIP-OVER, HINGED ETC.) ARE USED.
5. DOCK PLATFORM TO BE STEEL TROWEL AND BROOM FINISH W/HARDENING AND SEALING.
6. ALL STEEL INCL. BOLTS MUST BE GALVANIZED IN ACCORDANCE W/ ASTM A-123.

18 AS501 DOCK BUMPER SECTION
SCALE: NOT TO SCALE

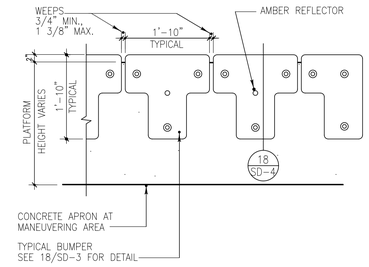

NOTES: ALL STEEL TO BE GALVANIZED IN ACCORDANCE W/ ASTM A-123.

19 AS501 DOCK BUMPER ELEVATION
SCALE: NOT TO SCALE

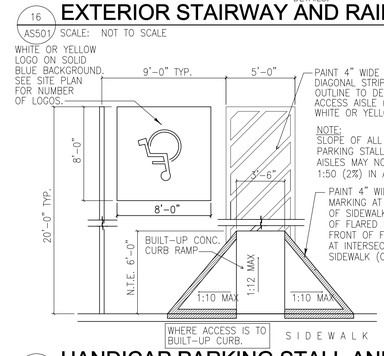

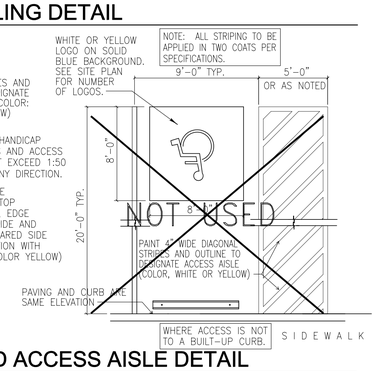

15 AS501 HANDICAP PARKING STALL AND ACCESS AISLE DETAIL
SCALE: NOT TO SCALE

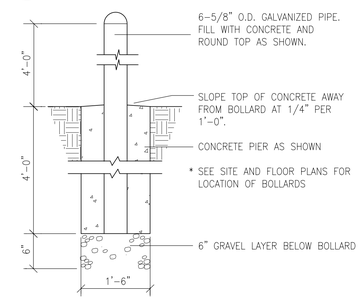

14 AS501 BOLLARD DETAIL
SCALE: 3/4" = 1'-0"

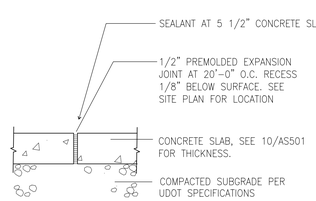

13 AS501 EXPANSION JOINT DETAIL (EJ)
SCALE: 1-1/2" = 1'-0"

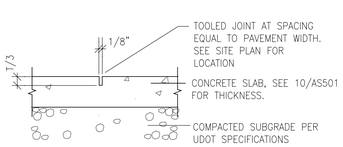

12 AS501 CONTROL JOINT DETAIL (CJ)
SCALE: 1-1/2" = 1'-0"

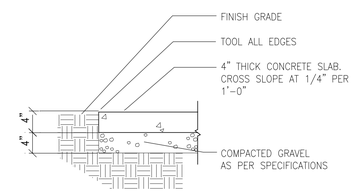

11 AS501 CONCRETE SIDEWALK DETAIL
SCALE: 1" = 1'-0"

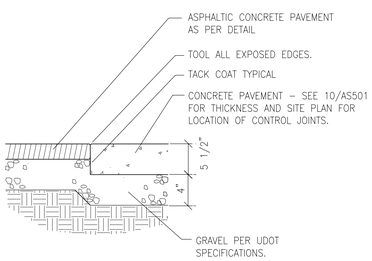

5 AS501 CONCRETE/ASPHALT EDGE
SCALE: NOT TO SCALE

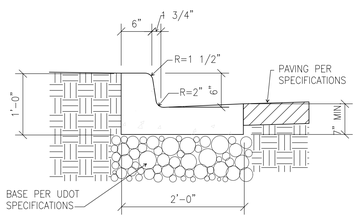

6 AS501 CURB AND GUTTER DETAIL
SCALE: NOT TO SCALE

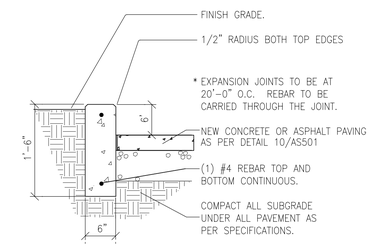

7 AS501 CONCRETE CURB DETAIL
SCALE: 1" = 1'-0"

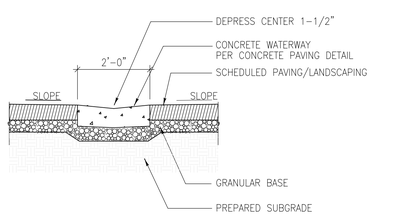

8 AS501 CONCRETE WATERWAY DETAIL
SCALE: NOT TO SCALE

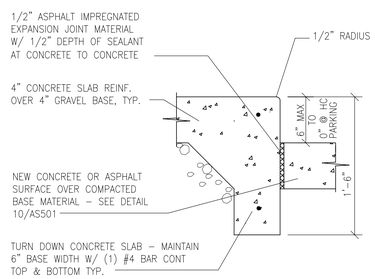

9 AS501 CURB TO SIDEWALK DETAIL
SCALE: 1-1/2" = 1'-0"

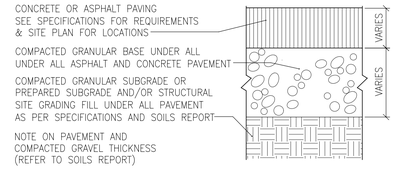

10 AS501 PAVEMENT SECTIONS
SCALE: 3" = 1'-0"

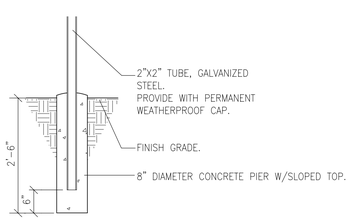

4 AS501 EXTERIOR SIGNAGE SUPPORT
SCALE: 3/4" = 1'-0"

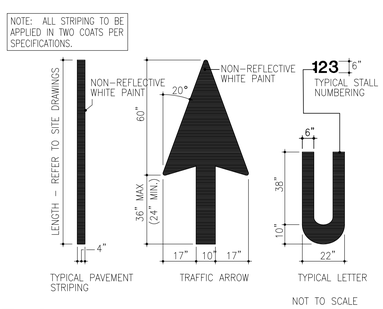

3 AS501 PAVEMENT MARKINGS
SCALE: NOT TO SCALE

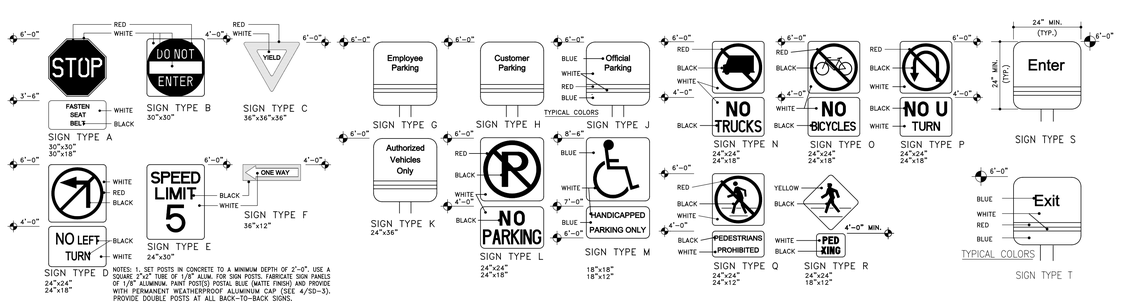

NOTES: 1. SET POSTS IN CONCRETE TO A MINIMUM DEPTH OF 2'-0". USE A SQUARE 2"x2" TUBE OF 1/8" ALUM. FOR SIGN POSTS. FABRICATE SIGN PANELS OF 1/8" ALUMINUM. PAINT POST(S) POSTAL BLUE (MATTE FINISH) AND PROVIDE WITH PERMANENT WEATHERPROOF ALUMINUM CAP (SEE 4/SD-3). PROVIDE DOUBLE POSTS AT ALL BACK-TO-BACK SIGNS.

2 AS501 EXTERIOR TRAFFIC SIGNAGE
SCALE: NOT TO SCALE

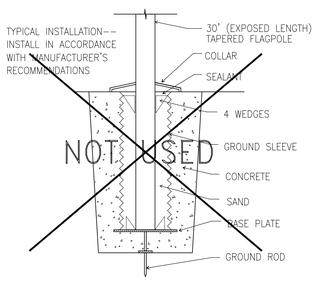

1 AS501 FLAGPOLE DETAIL
SCALE: 3/4" = 1'-0"

NEW HARRISVILLE LIQUOR STORE

DEPT OF ALCOHOLIC BEVERAGE CONTROL
1455 SOUTH WALL AVENUE, HARRISVILLE, UTAH

FRANK N MURDOCK JR ■ Architect & Associates
975 East 100 South Suite 100, Salt Lake City, Utah 84102 TEL: (801) 532-4441 FAX (801) 532-4220

SITE DETAILS

REVISION # DATE:

DFCM PROJECT NO.: 04242030
CONST DOC
FILE NAME: ABCH-AS501
PLOT SCALE: 1:240
DRAWN BY: STAFF
CHECKED BY: FNM
DATE: JANUARY 24, 2006

AS 501

SYMBOLS AND MATERIAL LEGEND

PLAN AND SECTION INDICATIONS

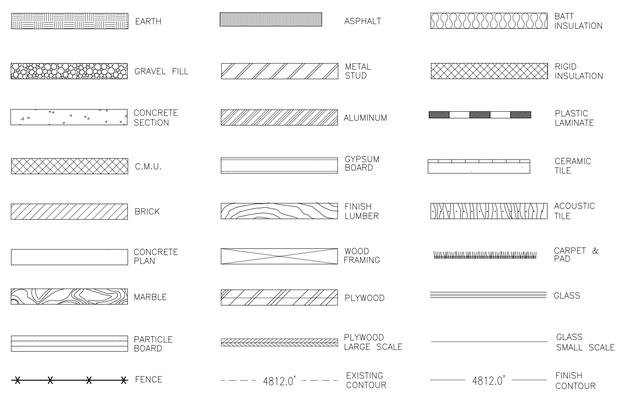

SHEET TAGS

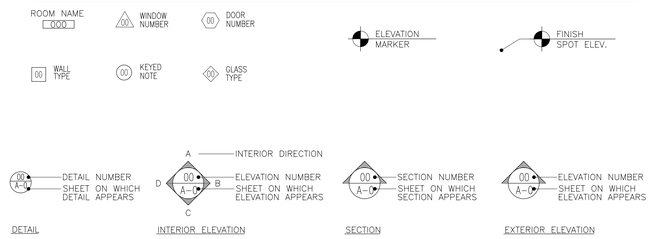

ABBREVIATIONS

@	AT	INFO.	INFORMATION
ADJ.	ADJUSTABLE	INSUL.	INSULATION
ADJ.	ADJACENT	INT.	INTERIOR
A.B.	ANCHOR BOLT	INV.	INVERT
A.F.F.	ABOVE FINISHED FLOOR	JAN	JANITOR
		JT.	JOINT
ALT.	ALTERNATE	LAM	LAMINATE
ALUM./AL.	ALUMINUM	MAS.	MASONRY
BRD./BD.	BOARD	MAX.	MAXIMUM
BLDG.	BUILDING	MECH.	MECHANICAL
BLK.	BLOCK (BLOCKING)	MFR.	MANUFACTURER
B.M.	BENCH MARK	MANUF.	MANUFACTURER
BOT./BTTM.	BOTTOM	MIN.	MINIMUM
CAB.	CABINET	M.O.	MASONRY OPENING
C.O.	CLEAN OUT	MTL.	METAL
C.J.	CONTROL JOINT	N.I.C.	NOT IN CONTRACT
CL	CENTER LINE	NO.	NUMBER
CLG.	CEILING	O.C.	ON CENTER
C.M.U.	CONCRETE MASONRY UNIT	O.D.	OUTSIDE DIAMETER
		O.H.	OVER HEAD
COL.	COLUMN	OPNG.	OPENING
CONC.	CONCRETE	OPP.	OPPOSITE
CONTD.	CONTINUED	OV.	OVER
CONST.	CONSTRUCTION	P.LAM	PLASTIC LAMINATE
CONT.	CONTINUOUS	P.L.	PROPERTY LINE
CONTR.	CONTRACTOR	PL.	PLATE
COTG	CLEAN OUT TO GRADE	PLYWD.	PLYWOOD
		PLY.	PLYWOOD
Ø/DIA.	ØIAMETER	PNTD.	PAINTED
DET.	DETAIL	PTD.	PAINTED
D.F.	DRINKING FOUNTAIN	PVMT.	PAVEMENT
DN.	DOWN	Q.T.	QUARRY TILE
DWGS.	DRAWINGS	R./R	RADIUS
DRAWGS	DRAWINGS	RCP	REINFORCED CONCRETE PIPE
EA.	EACH		
E.J.	EXPANSION JOINT	R.D.	ROOF DRAIN
ELEV./EL.	ELEVATION	REINF.	REINFORCEMENT
ELEV.	ELEVATOR	REQ.	REQUIRED
E.J.	EXPANSION JOINT	RM.	ROOM
ENL.	ENLARGED	R.O.	ROUGH OPENING
EQ.	EQUAL	SECT.	SECTION
EQUIP.	EQUIPMENT	SEC.	SECTION
EWC.	ELECTRIC WATER COOLER	SHT.	SHEET
		SIM.	SIMILAR
EXIST.	EXISTING	SQ./SQ	SQUARE
EXTG.	EXISTING	SPEC.	SPECIFICATION
EXP.	EXPANSION	S.S.	STAINLESS STEEL
EXT.	EXTERIOR	S.T.D.	STANDARD
F.D.	FLOOR DRAIN	STL.	STEEL
F.E.C.	FIRE EXTINGUISHER CABINET	STOR.	STORAGE
		STRUCT.	STRUCTURAL
F.E.	FIRE EXTINGUISHER	STRUC.	STRUCTURAL
FIN.	FINISH	SUSP.	SUSPENDED
F.F.	FINISH FLOOR	T.B.	TACK BOARD
F.H.	FIRE HYDRANT	T.O.	TOP OF
FL.	FLOOR	T.O.A.	TOP OF ASPHALT
FT.	FOOT	T.O.B.	TOP OF BEAM
F.V.	FIELD VERIFY	T.O.C.	TOP OF CONCRETE
GA.	GAUGE	T.O.C.	TOP OF CURB
GALV.	GALVANIZED	T.O.M.	TOP OF MASONRY
G.I./GALV.	GALVANIZED IRON	T.O.S.	TOP OF SLAB
G.B.	GYPSUM BOARD	T.O.W.	TOP OF WALL
GYP. BRD.	GYPSUM BOARD	TYP.	TYPICAL
H.B.	HOSE BIBB	U.N.O.	UNLESS NOTED OTHERWISE
H.C.	HANDICAPPED		
HD.	HEAD	V.T.	VINYL TILE
H.M.	HOLLOW METAL	W/	WITH
HOL.MTL.	HOLLOW METAL	W.W.M.	WELDED WIRE MESH
HR.	HOUR	W.W.F.	WELDED WIRE FABRIC
HT.	HEIGHT	WD.	WOOD
I.D.	INSIDE DIAMETER	WIN.	WINDOW
IN.	INCH	VEST.	VESTIBULE
INCMG	INCOMING	VDT.	VIDEO DISPLAY TERMINAL

CODE CRITERIA

DFCM DESIGN AND CODE CRITERIA

(Fee A/E: Attach and fill in applicable data for Contract Drawing submittal)

Applicable Codes:	Year		Year
International Building Code	2003	International Mechanical Code	2003
Dept of Justice ADA Accessibility Guidelines	REV. JULY 1, 1994	International Plumbing Code	2003
		Energy Code ASHRAE 90.1-1999	EXCEED BY 25%
		International Electrical Code	NEC 2005

A. Occupancy and Group GROUP "B"
Change in Use: Yes ___ No X Mixed Occupancy: Yes ___ No X

B. Type of Construction: TYPE II-B

C. Location of Property: F.R. Ext. Walls (Hrs.) NA Ext. Wall Opening(s) Protection (Hrs.) NA

D. Occupancy separation required (Hrs.): NA
Sprinklered indicate Yes
Stories 1

	Each Occupancy		
	BLDG # 1		
a. Actual Area (ft²):	8,410 SQ FT		
b. Basic Allowable Area:	23,000 SQ FT		
c. Allowable Area Increase Due to side yards:	%	Area (ft²)	
N			
E			
W			
S			
d. Side yard area increased (ft)	NA		
Accumulative sub-total (b+d):	NA		
Sprinkler: area increase (x 3 single)	NA		
(x 2 multi)	NA		
e. Total allowable area for a single story			
	NA		
x 2 for multi-story buildings:	NA		
f. Ratio = d/e (Actual divided by Allowable)			

E. Fire-Resitive Requirements (hrs.): (1Hr., 2Hr., 3 Hr., 4 Hr., N.H.T.)

Exterior Bearing Walls	0 HR	Floors - Ceiling Floors	0 HR
Interior Bearing Walls	0 HR	Roofs - Ceiling Roofs	0 HR
Exterior Non-bearing Walls	0 HR	Exterior Doors and Windows	0 HR
Structural Frame	0 HR	Shaft Enclosures	NA
Partitions - Permanent	0 HR		

FOOTNOTES:

a. In case of conflict with the U.S. Dept. Of Justice Federal Registers Parts I thru V - ADA Guidelines and specific reference to the Uniform Building Code - Accessibility Chapter, the ADA Guidelines shall prevail.

b. If the ratio > 1.0 either 1) Area seperation walls must be installed of 2 hour or 4 hour rating depending on the Construction Type, or 2) The Construction Type must be upgraded to permit a greater Basic Allowable Area. NOTE: Area separation walls must be clearly shown on the key plan in the Contract Documents.

VICINITY MAP

SCHEDULE OF DRAWINGS

COVER SHEETS
G001 COVER SHEET
G002 SCHEDULE OF DRAWINGS, MOUNTING STANDARDS

SITE DEVELOPMENT
C101 SURVEY
AS101 SITE DEMOLITION PLAN AND NEW SITE PLAN
AS102 SITE GRADING PLAN
AS103 SITE UTILITY PLAN
AS501 SITE DETAILS

ARCHITECTURAL
A101 FLOOR PLAN, ENLARGED PLANS, INT. ELEV.'S
A102 REFLECTED CEILING PLANS AND DETAILS
A103 ROOF PLAN AND DETAILS
A201 EXTERIOR ELEVATIONS
A301 WALL SECTIONS AND DETAILS
A302 WALL SECTIONS AND DETAILS
A303 WALL SECTIONS AND DETAILS
A501 MISCELLANEOUS DETAILS
A502 MISCELLANEOUS DETAILS
A601 DOOR, WINDOW, FINISH SCHEDULES

LANDSCAPE
LS101 LANDSCAPE PLAN AND PLANT SCHEDULE

STRUCTURAL
S001 STRUCTURAL GENERAL NOTES
S101 FOOTING AND FOUNDATION PLAN
S102 ROOF FRAMING PLAN
S301 STRUCTURAL DETAILS
S302 STRUCTURAL DETAILS

MECHANICAL
M0.1 MECHANICAL SCHEDULES
M2.1 MECHANICAL FLOOR PLANS
M6.1 MECHANICAL DETAILS

ELECTRICAL
E0.1 ELECTRICAL SCHEDULES AND DIAGRAMS
E1.1 ELECTRICAL SITE PLAN
E2.1 LIGHTING PLAN
E3.1 POWER PLAN
E4.1 PANEL SCHEDULES AND WIRING DIAGRAMS

TYPICAL HANDICAP TOILET ROOM MOUNTING STANDARDS

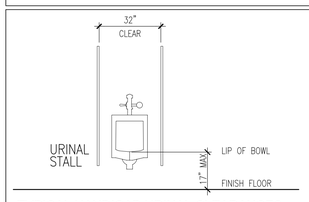

TYPICAL HANDICAP URINAL CLEARANCES

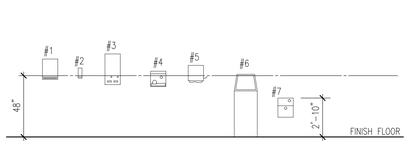

MISCELLANEOUS MOUNTING HEIGHTS

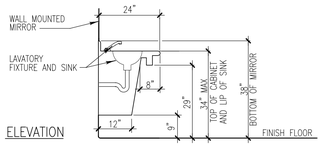

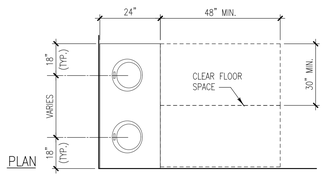

TYPICAL HANDICAP LAVATORY CLEARANCES

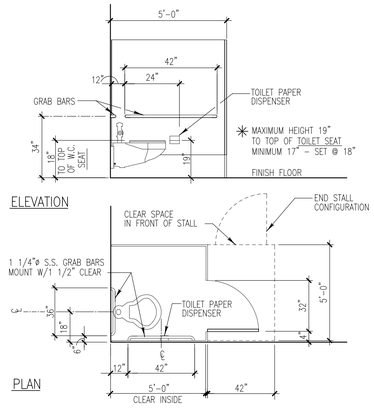

TYPICAL HANDICAP TOILET ROOM CLEARANCES

TYPICAL (NON-HANDICAPPED) TOILET ROOM MOUNTING STANDARDS

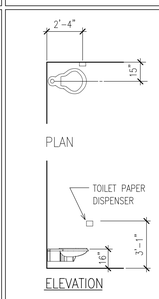

WALL MOUNTED W.C.

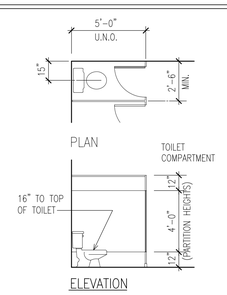

FLOOR MOUNTED WITH COMPARTMENT

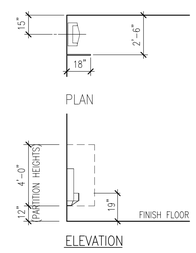

URINAL STALL

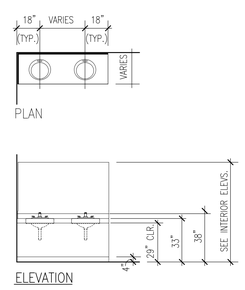

COUNTERTOP LAV

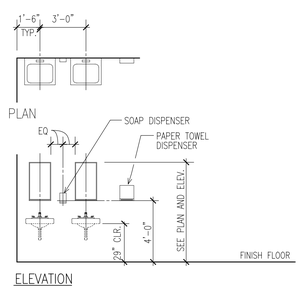

WALL MTD LAV

TYPICAL MISCELLANEOUS MOUNTING STANDARDS

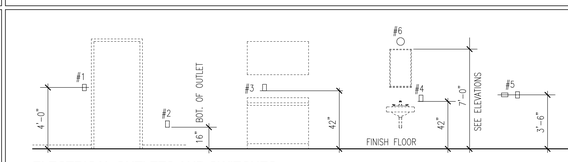

ITEM DESIGNATION
1. TYPICAL SWITCH HEIGHT
2. TYPICAL OUTLET HEIGHT
3. TYPICAL OUTLET HEIGHT AT COUNTERTOP
4. TYPICAL G.F.I. OUTLET HEIGHT AT LAVATORY
5. TYPICAL OUTLET HEIGHT FOR LAUNDRY ROOM AND UTILITY ROOM
6. TYPICAL BATH LIGHT FIXTURE HEIGHT

ELECTRICAL OUTLETS AND SWITCHES

ITEM DESIGNATION
1. PAPER CUP DISPENSER
2. ELECTRIC SWITCH/THERMOSTAT/FIRE ALARM
3. TELEPHONE
4. COUNTER TOP/DESK
5. ELEVATOR CONTROLS
6. FIRE EXTINGUISHER

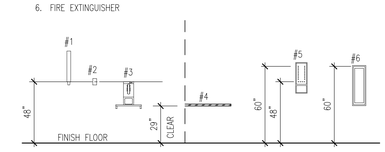

MISCELLANEOUS MOUNTING HEIGHTS

ITEM DESIGNATION
1. DEADLOCK AND STRIKE
2. PUSH AND PULL LATCHES, ARM PULL, (LOWER BASE), PULL PLATE CENTER LINE
3. BAR AND PULL CENTER LINE
4. CENTER LINE STRIKE, KNOB, LOCKS, HANDLE SETS, ROLLER LATCHES, EXIT BOLTS LOCKS

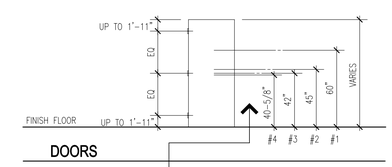

DOORS

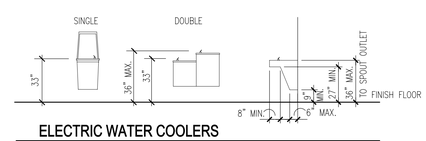

ELECTRIC WATER COOLERS

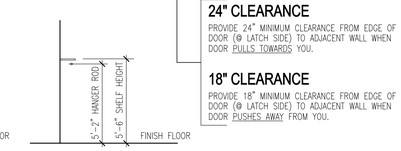

CLOSETS

24" CLEARANCE
PROVIDE 24" MINIMUM CLEARANCE FROM EDGE OF DOOR (@ LATCH SIDE) TO ADJACENT WALL WHEN DOOR PULLS TOWARDS YOU.

18" CLEARANCE
PROVIDE 18" MINIMUM CLEARANCE FROM EDGE OF DOOR (@ LATCH SIDE) TO ADJACENT WALL WHEN DOOR PUSHES AWAY FROM YOU.

NEW HARRISVILLE LIQUOR STORE
DEPARTMENT OF ALCOHOLIC BEVERAGE CONTROL
1455 SOUTH WALL AVENUE, HARRISVILLE, UTAH

FRANK N MURDOCK JR ■ Architect & Associates
975 East 100 South Suite 100, Salt Lake City, Utah 84102 TEL: (801) 532-4441 FAX (801) 532-4220

SCHEDULE OF DRAWINGS, MOUNTING STANDARDS, CODE REVIEW

REVISION # DATE:

DFCM PROJECT NO.: 04242030
CONSTR. DOC.
FILE NAME: ABCH-G002
PLOT SCALE: 1:1
DRAWN BY: STAFF
CHECKED BY: FNM
DATE: JANUARY 24, 2006

G 002

PROJECT INFORMATION

OWNER: STATE OF UTAH
DIVISION OF FACILITIES
CONSTRUCTION AND MANAGEMENT
4110 STATE OFFICE BUILDING
SALT LAKE CITY, UTAH 84114

ARCHITECT: FRANK N MURDOCK JR
ARCHITECT + ASSOCIATES
975 EAST 100 SOUTH
SALT LAKE CITY, UTAH 84102

PROPOSED USE
STATE LIQUOR STORE

PROPOSED ADDRESS
433 NORTH MAIN, TOOELE, UTAH

SITE INFORMATION (NOT FOR MATERIAL TAKE OFF USE)
TOTAL SITE: 1.384 ACRES (60,277 SQ FT ±)

BUILDING FOOTPRINT:	11,375 SQ FT	18.9%
HARD SURFACE AREA:	32,300 SQ FT	53.6%
LANDSCAPING AREA:	16,612 SQ FT	27.5%

PARKING INFORMATION
CUSTOMER &
EMPLOYEE PARKING: 71 PARKING STALLS
1 STALL / 160 SQ FT OF GROSS AREA

SITE DRAWINGS

SEE SHEET AS101 FOR GENERAL SITE DEMOLITION PLAN AND NEW SITE PLAN
SEE SHEET AS102 FOR SITE GRADING AND STORM SEWER INFORMATION
SEE SHEET AS103 FOR SITE UTILITY INFORMATION
SEE SHEET AS501 FOR SITE DETAIL INFORMATION

SITE PLAN LEGEND

- CATCH BASIN
- STORM DRAIN MAN HOLE
- POWER POLE
- WATER VALVE
- ELECTRIC BOX
- FIRE HYDRANT
- SANITARY SEWER MAN HOLE
- LIGHT POST
- STREET LIGHT BOX
- GAS METER
- TELEPHONE BOX
- PL PROPERTY LINE
- L LANDSCAPE AREA
- SW SIDEWALK

- T.O.G TOP OF GRATE
- I.E. INVERT ELEVATION
- T.O.SW TOP OS SIDEWALK
- T.O.PV TOP OF PAVEMENT
- T.O.C. TOP OF CONCRETE
- OVERHEAD TRANSMISSION LINE
- UNDERGROUND POWER
- SS SANITARY SEWER
- W WATER LINE
- T TELEPHONE LINE
- G GAS LINE
- C CABLE T.V.
- PARKING STALLS

- FENCE
- 2 – 4" PVC PIPE SLEEVE
- 4434 EXISTING GRADE CONTOUR
- 31 NEW GRADE CONTOUR
- CENTER LINE OF ROAD
- X NEW SECURITY FENCE
- A B SIGN TYPES – SEE 2/AS501
- NEW CONCRETE PAVING AND SIDEWALKS

GENERAL NOTES

1. REFER TO SITE DEVELOPMENT, LANDSCAPE, MECHANICAL AND ELECTRICAL DRAWINGS FOR DIMENSIONS AND ADDITIONAL SITE INFORMATION.
2. CONTRACTOR TO VERIFY ALL EXISTING SITE CONDITIONS. NOTIFY ARCHITECT OF ANY DISCREPANCIES TO THE CONTRACT DOCUMENTS.
3. PROVIDE POSITIVE DRAINAGE AWAY FROM BUILDING AT ALL POINTS.
4. CONTRACTOR SHALL NOT PARK, STORE EQUIPMENT, OR USE THE EXISTING ROAD FOR ANY PURPOSE OTHER THAN ACCESS TO THE PROJECT SITE. CONTRACTOR SHALL NOT DISTURB OR USE ANY AREA OUTSIDE CONTRACT LIMIT LINE TO PARK OR STORE EQUIPMENT. UNLESS OTHERWISE NOTED, THE PROPERTY LINE SHALL FORM THE BOUNDARY OF THE CONTRACT LIMIT LINE.
5. CONTRACTOR WILL MAINTAIN AND PROTECT ALL EXISTING UTILITIES DURING CONSTRUCTION.
6. ALL CUTTING, PATCHING, EXCAVATION AND BACKFILL DONE IN STREET SHALL BE DONE IN ACCORDANCE WITH UTAH DEPARTMENT OF TRANSPORTATION SPECIFICATIONS.
7. PROVIDE PIPE SLEEVES WHERE SPRINKLER LINES PASS UNDER ASPHALT PAVEMENT OR RETAINING WALLS.
8. PROTECT ANY EXISTING STORM DRAINS FROM MUD AND DEBRIS DURING CONSTRUCTION.

LANDSCAPE LEGEND

NOTE:
"CALIPER" INDICATES THE DIAMETER OF THE TREE TRUNK TAKEN AT 6" ABOVE THE GROUND LEVEL.

LANDSCAPING AREAS REQUIRING AUTOMATIC SPRINKLING SYSTEM

DECIDUOUS TREES

AP — AUSTRIAN PINE
PINUS NIGRA
10 TO 12' TALL

BASED ON AVAILABILITY, OTHER PINE AND/OR FIR SPECIES MAY BE SUBSTITUTED AFTER APPROVAL BY ARCH.

M — MAPLE – "CLEVELAND/EMERALD MAPLE"
ACER PLATANOIDES
4" CALIPER

BP — FLOWERING PEAR – "BRADFORD PEAR"
PYRUS CALLERYANA
2" CALIPER

GROUND COVER

GC — MIXED GROUNDCOVER
PLANT @ 18" o.c. (1 GAL CONTAINER)
33% GREATER VARIGATED PERIWINKLE
VINA MAJOR "VARIEGATA"
33% GREATER PERIWINKLE
VINA MAJOR
34% ENGLISH IVY
HEDERA HELIX

GRASS

SOD — SOD = BLUEGRASS VARIETIES

LANDSCAPING ROCKS

ROCK — INSTALL 3" OF WASHED RIVER RUN ROCKS OVER LANDSCAPE FABRIC ROCKS TO BE MIN 2" X MAX 4". IRRIGATE TREES ONLY

LANDSCAPE NOTES

1. ALL AREAS NOTED AS "SOD" (GRASS) OR "LANDSCAPED AREA", SHALL BE PROVIDED WITH A LANDSCAPE IRRIGATION SYSTEM. SLEEVES SHALL BE PROVIDED UNDER PAVED AREAS TO FACILITATE THE IRRIGATION SYSTEM. SEE SPECIFICATIONS FOR REQUIREMENTS.
2. LANDSCAPE CONTRACTOR IS RESPONSIBLE FOR SLEEVES UNDER PAVED AREAS. WORK SHALL BE COORDINATED WITH PAVING CONTRACTOR.
3. INSTALL A MINIMUM OF 6" OF TOP SOIL AT ALL LANDSCAPED AREAS.
4. MINIMUM EXCAVATION FOR TREES SHALL BE A DIAMETER OF 2'-0" GREATER THAN THE ROOT BALL, AND 6" DEEPER THAN THE ROOT BALL. BACKFILL HOLE WITH TOPSOIL. COVER AREA INSIDE EDGING WITH BARK CHIPS (3" DEEP).
5. COMPLETELY COVER AREA AROUND SHRUB, TREE, AND GROUNDCOVER PLANTINGS WITH A 4" THICK LAYER OF BARK CHIPS OVER LANDSCAPE FABRIC.
6. STAKE AND GUY SUPPORT ALL TREES. PROVIDE TREE TRUNK PROTECTION PLASTIC SLEEVES AT ALL TREES NOT PLANTED WITH SHRUBS AROUND THEIR BASE.
7. PROVIDE FLEXIBLE EDGING AND BARK CHIPS AT ALL TREES IN LAWN AREAS. PROVIDE 4' DIAMETER EDGING CIRCLE, AT TREES IN LAWN AREAS, WHERE NO EDGING IS OTHERWISE NOTED.
8. CONSTRUCT A 4" HIGH EARTHEN BERM AROUND ALL TREES AND SHRUBS. BERM TO BE SAME DIAMETER AS EXCAVATION FOR ROOT BALL PLANTING PIT.
9. MINIMUM EXCAVATION FOR SHRUBS SHALL BE A DIAMETER OF 12" GREATER THAN THE DIAMETER OF THE CONTAINER. EXCAVATION SHALL BE 18" DEEP MINIMUM. BACKFILL HOLE WITH TOP SOIL.
10. PROVIDE AND INSTALL COMPLETE AUTOMATIC LANDSCAPE SPRINKLING SYSTEM TO ALL LAWN AND LANDSCAPED AREAS. SEE SPECIFICATIONS FOR DETAILED SYSTEM REQUIREMENTS.

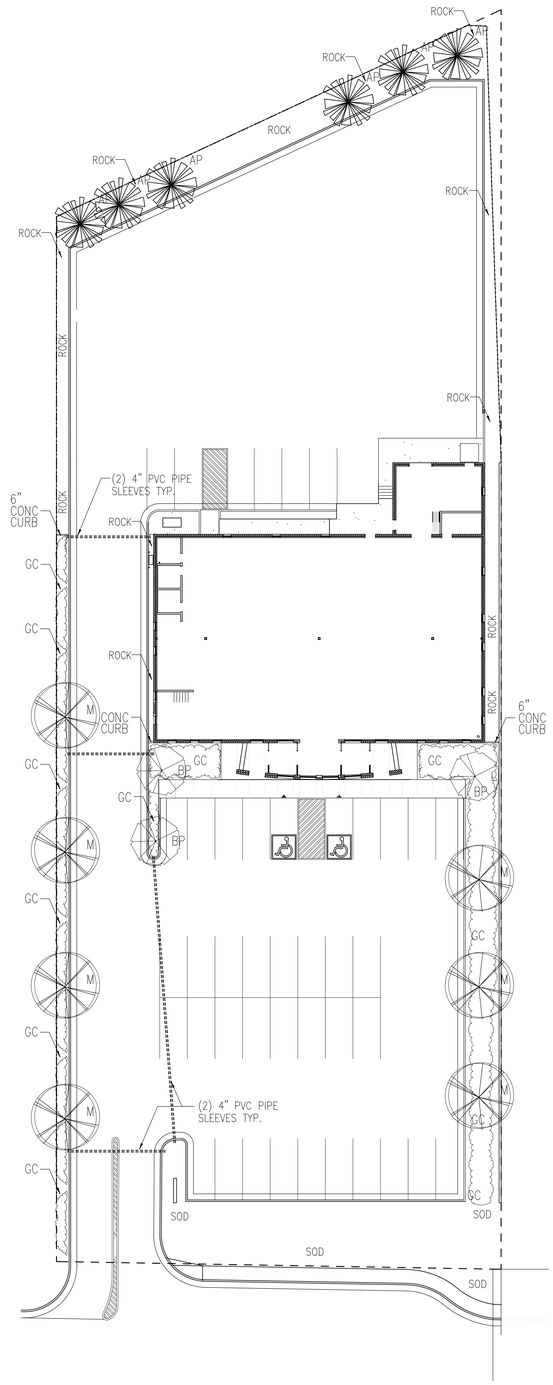

LANDSCAPE PLAN

NEW HARRISVILLE LIQUOR STORE
DEPARTMENT OF ALCOHOLIC BEVERAGE CONTROL
1455 SOUTH WALL AVENUE, HARRISVILLE, UTAH

FRANK N MURDOCK JR ■ Architect & Associates
975 East 100 South Suite 100, Salt Lake City, Utah 84102 TEL: (801) 532-4441 FAX (801) 532-4220

LANDSCAPE PLAN

REVISION # DATE:

DFCM PROJECT NO.:
04242030
CONSTR. DOC.
FILE NAME: ABCH-LS101
PLOT SCALE: 1:240
DRAWN BY: STAFF
CHECKED BY: FNM
DATE: JANUARY 24, 2006

LS 101

GENERAL NOTES

1. DO NOT SCALE DRAWINGS VERIFY DIMENSIONS IN FIELD PRIOR TO MAKING ANY ROUGH-INS.
2. FINAL CONNECTIONS TO EQUIPMENT SHALL BE MADE AS PER MANUFACTURERS WRITTEN INSTRUCTIONS AND APPROVED WIRING DIAGRAMS AND DETAILS. IT SHALL BE THE CONTRACTORS RESPONSIBILITY TO PROVIDE ALL MATERIALS AND EQUIPMENT COMPATIBLE WITH EQUIPMENT ACTUALLY SUPPLIED.
3. CONSULT ARCHITECTS REFLECTED CEILING PLANS FOR EXACT LOCATIONS OF LIGHTING FIXTURES, SPEAKERS, SMOKE DETECTORS ETC.
4. ELECTRICAL CONTRACTOR SHALL MEET WITH THE CEILING AND MECHANICAL CONTRACTORS TO COORDINATE LOCATIONS, CLEARANCES, CEILING TYPES AND ROUGH-IN REQUIREMENTS OF ALL LIGHTING FIXTURES PRIOR TO DUCT, PIPING AND CEILING INSTALLATIONS.
5. ALL EMPTY RACEWAY SYSTEMS SHALL HAVE A 200LB RATED PULL CORD INSTALLED AND SHALL BE IDENTIFIED AT EACH JUNCTION, PULL AND TERMINATION POINT. USING PERMANANT MARKER IN THE BOX. ID SHALL INDICATE INTENDED USE OF CONDUIT, ORIGINATION AND TERMINATION POINTS OF EACH INDIVIDUAL CONDUIT.
6. ALL PENETRATIONS OF FIRE RATED FLOORS, CEILING AND WALLS SHALL BE SEALED WITH APPROVED AND RATED FIRE STOP MATERIAL TO MAINTAIN FIRE RATING OF ASSEMBLY.
7. ELECTRICAL BOXES SHALL NOT BE LOCATED IN MASONRY OR CONCRETE COLUMNS, BOND BEAMS OR GROUTED CELLS OF MASONRY WALLS ADJACENT TO OPENINGS WITHOUT COORDINATION WITH THE MASONRY CONTRACTOR.
8. IT IS THE INTENT OF THESE DRAWINGS AND SPECIFICATIONS TO ESTABLISH A A STANDARD OF QUALITY. THE ENGINEER RESERVES THE RIGHT TO VERBALLY APPROVE METHODS AND MATERIALS NOT REFLECTED HEREIN.
9. CONTRACTOR SHALL REVIEW ARCHITECTURAL, STRUCTURAL, MECHANICAL, PLUMBING AND OTHER DRAWINGS PRIOR TO BID.
10. WORK SHALL BE PERFORMED IN A PROFESSIONAL WORKMANLIKE MANNER TO THE SATISFACTION OF THE ARCHITECT AND ENGINEER.
11. WORK, MATERIALS AND EQUIPMENT SHALL CONFORM TO THE LATEST EDITIONS OF LOCAL, STATE AND NATIONAL CODES, STANDARDS AND ORDINANCES.
12. CONTRACTOR SHALL SECURE AND PAY FOR ALL NECESSARY BUILDING PERMITS AND INSPECTION FEES.
13. THE CONTRACTOR SHALL GUARANTEE THE INSTALLATION AGAINST DEFECTS IN MATERIALS AND WORKMANSHIP, WHICH MAY OCCUR UNDER NORMAL USAGE FOR A PERIOD OF ONE YEAR AFTER SUBSTANTIAL COMPLETION. DEFECTS SHALL BE PROMPTLY CORRECTED.
14. PROVIDE RECORD DRAWINGS IN ACCORDANCE WITH THE PROJECT SPECIFICATIONS.
15. VERIFY EXACT LOCATION OF EQUIPMENT TO BE FURNISHED BY OTHERS PRIOR TO ROUGH-IN.
16. ELECTRICAL CONTRACTOR SHALL VERIFY ALL EQUIPMENT DIMENSIONS AND LOCATIONS BEFORE BEGINNING ROUGH-INS. CONSULT CONTRACT DOCUMENT DRAWINGS AND SHOP DRAWINGS TO VERIFY ALL CODE AND MAINTENANCE REQUIRED CLEARANCES ARE MAINTAINED.
17. CONTRACTOR SHALL VERIFY ACTUAL ELECTRICAL LOADS OF EACH PIECE OF EQUIPMENT REQUIRING POWER. BRING ANY DESCREPANCIES TO THE ATTENTION OF THE PROJECT ENGINEER.
18. SYSTEMS SHALL BE TESTED FOR PROPER OPERATION. IF TESTS RESULT IN DEFECT OR IMPROPER OPERATION THE CONTRACTOR SHALL MAKE ANY CORRECTIONS NECESSARY AT NO ADDITIONAL COSTS TO THE OWNER.
19. WIRE SHALL BE COPPER 75° C RATED FOR GENERAL USE. FOR HID FIXTURES AND WIRING WITHIN 3' OF FLUORESCENT BALLAST WIRE SHALL BE 105°C MINIMUM 90° C RATED. CONDUCTOR SIZES INDICATED ARE FOR INSTALLATION IN A MAXIMUM 30° C AMBIENT TEMPERATURE ENVIRONMENT. CONDUCTOR AMPACITY SHALL BE DERATED FOR HIGHER AMBIENT INSTALLATIONS.
20. SPLICES IN EXTERIOR PULLBOXES AND MANHOLES SHALL BE MADE WATERPROOF USING "SCOTCAST" SPLICE KIT OR APPROVED EQUAL. SEAL ENDS OF CONDUITS AND DUCTS ENTERING BOXES WITH "DUCTSEAL" OR EQUAL.
21. SUBMIT SHOP DRAWINGS IN ACCORDANCE WITH SPECIFICATIONS BOUND IN A THREE RING BINDER, INDEXED IN A NEAT AND ORDERLY MANNER WITH TYPE AND MODEL NUMBERS INDICATED. SUBMITTALS SHALL INCLUDE BUT NOT LIMITED TO: LIGHTING FIXTURES, LAMPS, WIRING DEVICES, OCCUPANCY SENSORS, CONTACTORS, TIME CLOCKS, PHOTOCELLS, RELAYS, SWITCHBOARDS, PANELBOARDS, MOTOR CONTROL CENTERS, SAFETY SWITCHES, MOTOR STARTERS, OVERCURRENT PROTECTION DEVICES, TRANSFORMERS, CONDUCTORS OVER 600 VOLTS AND ALL SPECIAL SYSTEMS SUCH AS FIRE ALARM, LIGHTING CONTROLS, SECURITY SYSTEMS, SOUND SYSTEMS ETC.
22. VERIFY EXACT LOCATIONS OF ALL NEW AND EXISTING UNDERGROUND SITE UTILITIES, PIPING AND RACEWAY SYSTEMS PRIOR TO TRENCHING. PROVIDE NECESSARY TRENCHING, BACKFILL EXCAVATION, SUPPORTS, SERVICE FEEDERS, (CONDUIT AND/OR WIRE), PULL BOXES, TRANSFORMER PADS, SAW CUTTING AND PATCHING, CONCRETE PAVING ETC. REQUIRED. BACKFILL TRENCHES TO 90% COMPACTION AND PATCHING TO MATCH EXISTING. CONTRACTOR SHALL OBTAIN AND VERIFY EXACT UTILITY COMPANY DRAWINGS AND REQUIREMENTS FOR ALL SITE UTILITIES. ELECTRICAL CONTRACTOR SHALL ALSO COORDINATE ELECTRICAL RELATED UTILITIES WITH THE CIVIL AND MECHANICAL ENGINEERS AND CONTRACTORS.
23. PULLBOXES, CABINETS, ETC. MOUNTED ON THE EXTERIOR OF THE BUILDING AT GRADE LEVEL, SHALL BE WEATHERPROOF TYPE WITH HINGED GASKETED LOCKABLE COVERS SECURED WITH TAMPERPROOF SCREWS.
24. CONTROL OUTDOOR LIGHTING WITH CONTACTOR & 24/7 TIME CLOCK WITH RESERVE POWER AND PHOTO CELL NEAR ROOF.

LIGHTING FIXTURE SCHEDULE

FIXTURE TYPE	MANUFACTURE	CATALOG NUMBER	DESCRIPTION	LAMPS	QTY	FIX WATTS	MTG	VOLTS
A	METALUX	2RDI-2S4T5-RP-120-EBT1	REC. DIRECT/INDIRECT FLUORESCENT FIXTURE W/ NO LAMPS	F54 T5HO SP35	2	115	LAY-IN	120
AE	METALUX	2RDI-2S4T5-RP-120-EBT1-EM	REC. DIRECT/INDIRECT FLUORESCENT FIXTURE W/ NO LAMPS W/EMERGENCY	F54 T5HO SP35	2	115	LAY-IN	120
B	METALUX	2GC8-332A12S-120-EB81	LAY-IN 3 LAMP LENSED FLUORESCENT TROFFER	F32 T8 SP35	3	95	LAY-IN	120
BE	METALUX	2GC8-332A12S-120-EB81-EM	LAY-IN 3 LAMP LENSED FLUORESCENT TROFFER W/EMERGENCY BATTERY PACK	F32 T8 SP35	3	95	LAY-IN	120
C	METALUX	B1-232-120-EB81	WALL MOUNTED 4' 2LAMP FLUORESCENT FIXTURE	F32 T8 SP35	2	66	SURF WAL	120
D	METALUX	WB-232A-120-EB81	SURFACE MOUNT 2LAMP FLUORESCENT WRAP AROUND FIXTURE	F32 T8 SP35	2	66	SURF	120
E	SURE LITE	CUIHD	WALL MOUNTED EMERGENCY BATTERY PACK	L/W FIXTURE	2	50	SURF	120
F	METALUX	ST-D1-232-120-EB81	8' 2LAMP INDUSTRIAL FLUORESCENT FIXTURE	F32 T8 SP35	4	110	SUSP	120
G	PORTFOLIO	C7042E-E-7000-L1-TRM7P	RECESSED FLURESCENT DOWNLIGHT	42 PLT	1	50	REC.	120
H	HALO	L6S2P WITH L2RP FIXTURES 16-TOTAL	SINGLE CIRCUIT LIGHT TRACK W/FIXTURES	75W PAR 30	-	75	TRACK	120
X1	SURE LITE	CX7170-G-SD	LED EXIT SIGN WITH BLACK BODY & GREEN LETTERS	C/W FIXTURE	-	4	SURF	120
OA	INVUE	ENV100MH-120-MB-FTP-GM-LG	SURFACE MOUNTED HID ACCENT FIXTURE	(1) 100W MH	1	110	SURF	120
OB	LUMARK	MHWK175120	175W METAL HALIDE WALL PACK	175W MH	1	185	SURF	120
OC	INVUE	2AEN400MH200-35QH-FF-VA1095-GM S6X4A2S6GM M1G	POLE MOUNTED TWIN 400W METAL HALIDE AREA LIGHTING FIXTURE	400W MH	2	460	POLE& BASE	208
OD	INVUE	AEN400MH200-35QH-FF-VA1095-GM S6X4A2S6GM M1G	POLE MOUNTED SINGLE 400W METAL HALIDE AREA LIGHTING FIXTURE	400W MH	1	460	POLE& BASE	208
OE	INVUE	AEN250MH200-35QH-FF-VA1095-GM S6X4A1S6GM M1G	POLE MOUNTED SINGLE 250W METAL HALIDE AREA LIGHTING FIXTURE	250W MH	1	285	POLE& BASE	208
OF	INVUE	VU5100MH120 S3 AP	WALL MOUNTED 100W METAL HALIDE FIXTURE	100W MH	1	115	SURF	120

ELECTRICAL SYMBOL SCHEDULE

STANDARD MOUNTING HEIGHT UNLESS OTHERWISE NOTED ON PLANS

SYMBOL	DESCRIPTION	MOUNTING HEIGHT	NOTES
	ONE CIRCUIT, TWO WIRE HOME RUN TO PANEL		
	2 CIRCUIT, 3 WIRE, COMMON NEUTRAL HOME RUN		
	3 CIRCUIT, 4 WIRE, COMMON NEUTRAL HOME RUN		
	CONDUIT RUN CONCEALED IN WALL OR CEILING		
	CONDUIT UP		
	CONDUIT DOWN		
	CONDUIT STUB LOCATION	CAP CONDUIT	
	CEILING LIGHT FIXTURE	CEILING	
	WALL LIGHT FIXTURE	AS NOTED	
	RECESSED DOWNLIGHT FIXTURE	CEILING	
	FLUORESCENT LIGHT FIXTURE	AS NOTED	
	FLUORESCENT EGRESS LIGHT FIXTURE	AS NOTED	UNSWITCHED
	CEILING MOUNTED EXIT LIGHT	CEILING	
	WALL MOUNTED EXIT LIGHT	AS NOTED	
	SINGLE POLE SWITCH	+4'-0"	
3	THREE-WAY SWITCH	+4'-0"	
4	FOUR-WAY SWITCH	+4'-0"	
	DIMMER SWITCH	+4'-0"	
	DUPLEX RECEPTACLE	+16"	
A	DUPLEX RECEPTACLE		ABOVE COUNTER
W	ELECTRIC WATER COOLER RECEPTACLE		SEE DETAIL
WP	WEATHERPROOF RECEPTACLE	+24"	
IG	ISOLATED GROUND RECEPTACLE	+16"	
	GROUND FAULT INTERRUPTER DUPLEX RECEPTACLE	+16"	
	FOURPLEX RECEPTACLE	+16"	
	SPECIAL PURPOSE OUTLET	+16" OR AS NOTED	
	TELEPHONE OUTLET-RUN 3/4"C & TEL. EQUIP BOARD	+16"	
	TELEPHONE/DATA OUTLET-RUN 3/4"C TO TEL EQUIP BOARD	+16"	
J	JUNCTION BOX ('F' IN FLOOR)	AS NOTED	
	MOTOR OUTLET	TO SUIT EQUIP.	
T	MANUAL STARTER THERMAL OVERLOAD SWITCH W/PILOT LIGHT	+4'-0"	
	PANEL BOARD	TOP AT +6'-0"	
	TELEPHONE TERMINAL BOARD		
F	FIRE ALARM MANUAL STATION	+4'-0"	
H	FIRE ALARM SIGNAL SPEAKER/STROBE	+6'-8"	
S	SMOKE DETECTOR	CEILING	
D	DUCT SMOKE DETECTOR		MTD. IN DUCT
H	HEAT DETECTOR	CEILING	
842	ARCHITECTURAL ROOM NUMBER		
A	LIGHT FIXTURE (LETTER DESIGNATES TYPE)		
2 E2.1	EQUIPMENT NUMBER		
	OVER HEAD DOOR CONTROLLER		
	FUSED DISCONNECT SWITCH		
	DISCONNECT SWITCH		
	CLOSED CIRCUIT TELEVISION CAMERA	CEILING	
	SECURITY DOOR POSITION INDICATING SWITCH	DOOR JAMB	
M	SECURITY MOTION SENSOR	CEILING	

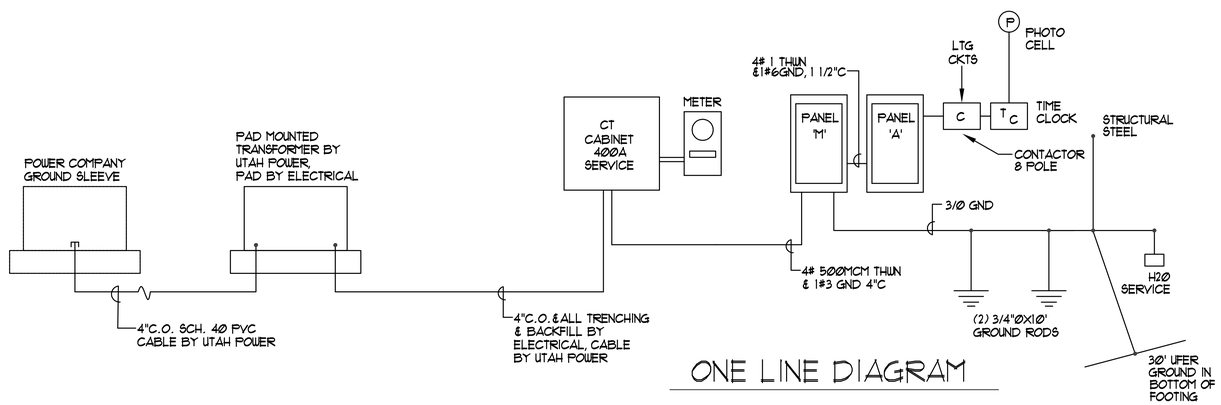

ONE LINE DIAGRAM

Copyright (C) 2005 by PVE, Inc. Salt Lake City, Utah. All rights reserved. Unauthorized copying and/or use is illegal and subject to prosecution.

NEW HARRISVILLE LIQUOR STORE
DEPARTMENT OF ALCOHOLIC BEVERAGE CONTROL
WALL AVENUE, HARRISVILLE, UTAH

ELECTRICAL SYMBOLS, SCHEDULES, NOTES & ONE-LINE DIAGRAM

FRANK N MURDOCK JR ■ Architect & Associates
975 East 100 South Suite 100, Salt Lake City, Utah 84102 TEL: (801) 532-4441 FAX (801) 532-4220

REGISTERED PROFESSIONAL ENGINEER
No. 154867
DEAN P. LEVORSEN
STATE OF UTAH

REVISION # DATE:

DFCM PROJECT NO.:
-
CONSTR. DOC.
FILE NAME: 05291.01
PLOT SCALE: AS NOTED
DRAWN BY: K.D.M.
CHECKED BY: R.K.R.
DATE: 1-11-06

PVE Inc.
Consulting Mechanical Electrical Engineers
90 South 400 West, Suite 340
Salt Lake City, UT 84101
Phone: (801) 359-3158
Fax: (801) 521-4114

E0.1

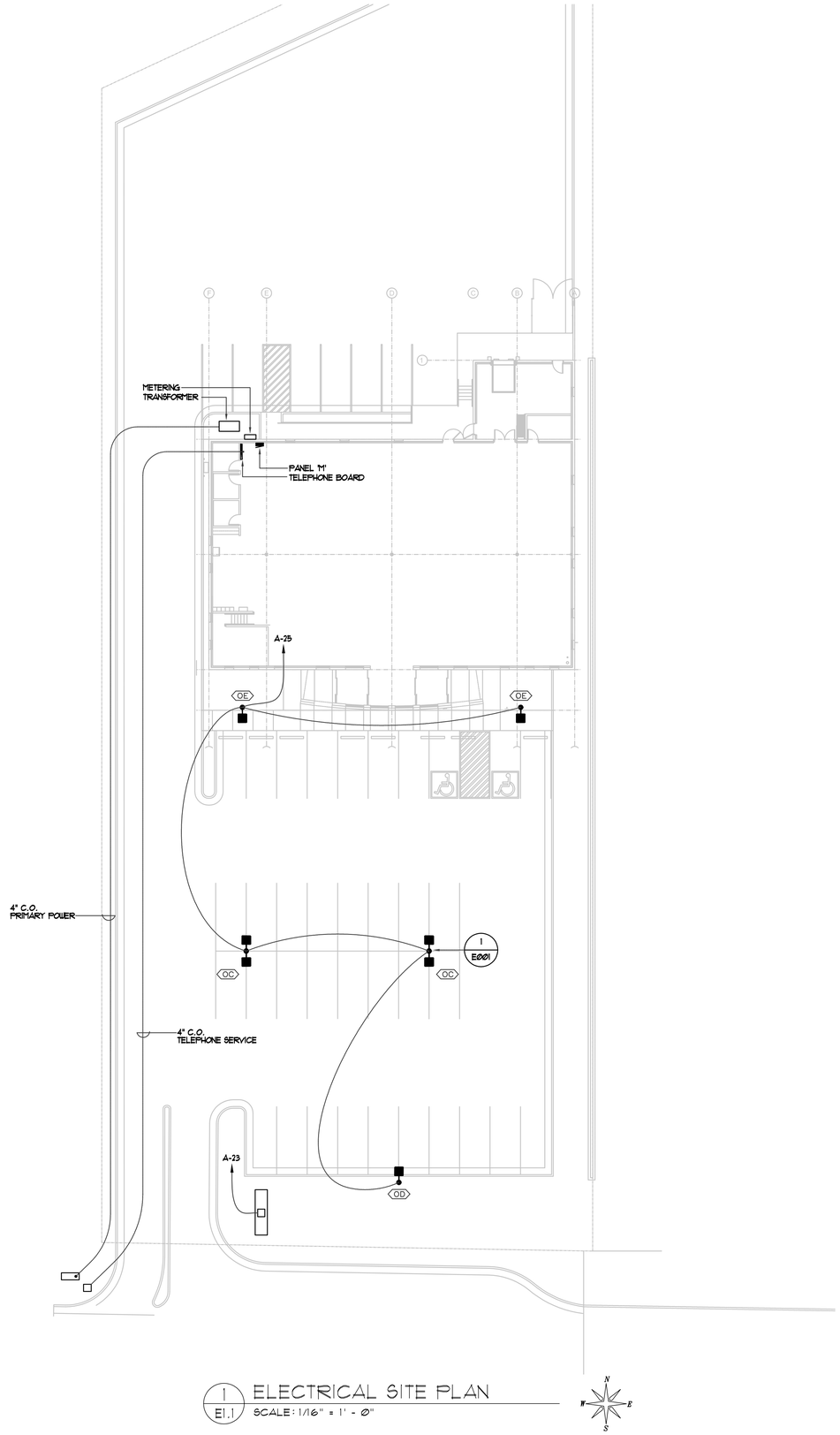

1 / E1.1 ELECTRICAL SITE PLAN

SCALE: 1/16" = 1' - Ø"

WALL AVENUE

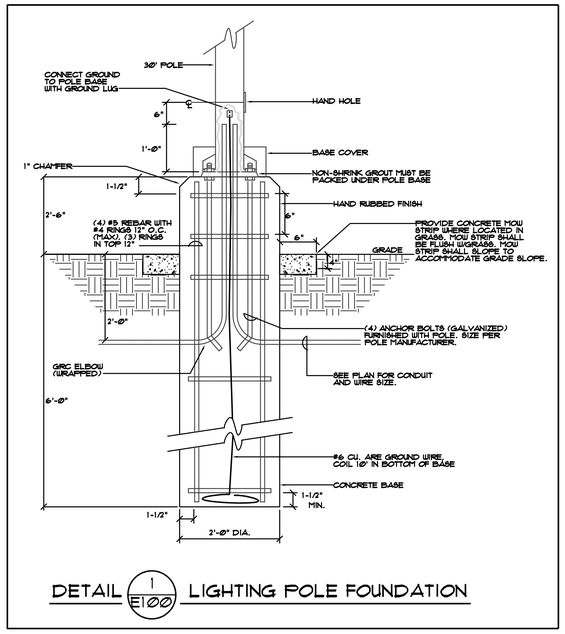

DETAIL 1 / E1ØØ LIGHTING POLE FOUNDATION

NEW HARRISVILLE LIQUOR STORE

DEPARTMENT OF ALCOHOLIC BEVERAGE CONTROL
WALL AVENUE, HARRISVILLE, UTAH

ELECTRICAL SITE PLAN

FRANK N MURDOCK JR ■ Architect & Associates
975 East 100 South Suite 100, Salt Lake City, Utah 84102 TEL: (801) 532-4441 FAX (801) 532-4220

REGISTERED PROFESSIONAL ARCHITECT
No. 154867
DEAN P. LEVORSEN
STATE OF UTAH

REVISION #	DATE:

DFCM PROJECT NO.: -
CONSTR. DOC.
FILE NAME: 05291.01
PLOT SCALE: AS NOTED
DRAWN BY: K.D.M.
CHECKED BY: R.K.R.
DATE: 1-11-06

E1.1

PVE Inc.
Consulting Mechanical Electrical Engineers
90 South 400 West, Suite 340
Salt Lake City, UT 84101
Phone: (801) 359-3158
Fax: (801) 521-4114

Copyright (C) 2005 by PVE, Inc. Salt Lake City, Utah. All rights reserved. Unauthorized copying and/or use is illegal and subject to prosecution.

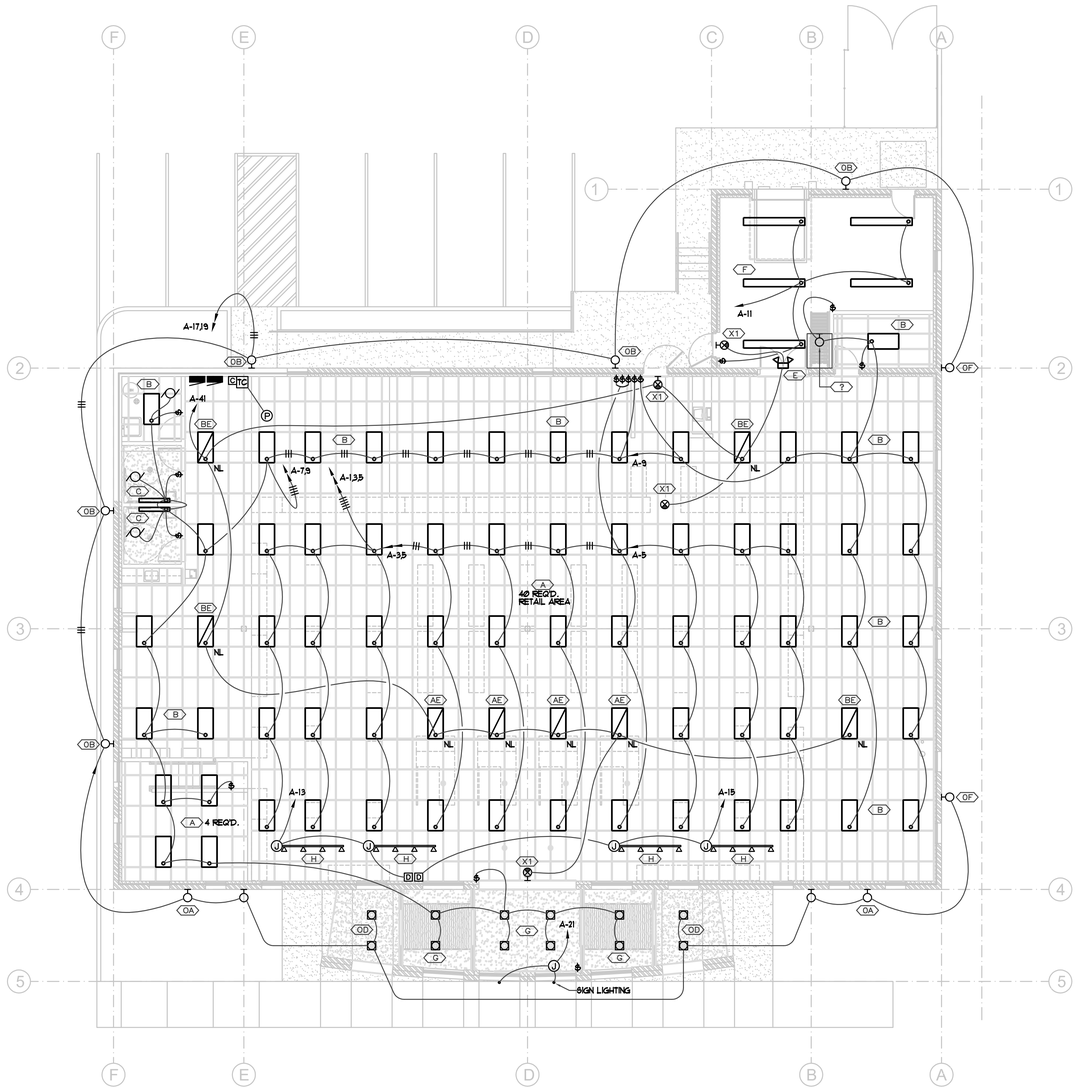

1 LIGHTING PLAN
E2.1
SCALE: 1/8" = 1' - 0"

3' 0 2' 4' 6' 8'

Copyright (C) 2005 by PVE, Inc. Salt Lake City, Utah. All rights reserved. Unauthorized copying and/or use is illegal and subject to prosecution.

NEW HARRISVILLE LIQUOR STORE

DEPARTMENT OF ALCOHOLIC BEVERAGE CONTROL
WALL AVENUE, HARRISVILLE, UTAH

LIGHTING PLAN

FRANK N MURDOCK JR ■ Architect & Associates
975 East 100 South Suite 100, Salt Lake City, Utah 84102 TEL: (801) 532-4441 FAX (801) 532-4220

REGISTERED PROFESSIONAL ENGINEER
No. 154867
DEAN P. LEVORSEN
STATE OF UTAH

REVISION #	DATE:

DFCM PROJECT NO.:
-
CONSTR. DOC.
FILE NAME: 05291.01
PLOT SCALE: AS NOTED
DRAWN BY: K.D.M.
CHECKED BY: R.K.R.
DATE: 1-11-06

PVE Inc.
Consulting Mechanical Electrical Engineers
90 South 400 West, Suite 340
Salt Lake City, UT 84101
Phone: (801) 359-3158
Fax: (801) 521-4114

E2.1

KEYED NOTES

1. DUPLEX CONVENIENCE OUTLET MOUNTED HORIZONTALLY IN BASE OF SHELVING.
2. OUTLET MOUNT AT +84" FOR "OPEN"SIGN.
3. 3/4" CONDUIT W/2 APR CFIT 5E CABLES TO PHONE CABINET&DATA RACK IN OFFICE #103. VERIFY EXACT LOCATION WITH MILLWORK SHOP DRAWING PRIOR TO ROUGH-IN.
4. 3/4" CONDUIT & SECURITY SYSTEM WIRING TO SECURITY PANEL.
5. 3/4" CONDUIT WITH (2) APR CAT 5E CABLES TO PHONE CABINET&DATA RACK IN OFFICE #103.
6. CIRCUIT ALL EXHAUST FANS EF-1 - EF-4 ON LIGHTING CIRCUIT A-13, CONTROL EF-1-3 WITH LIGHTS, EF-4 SEPARATE SWITCH.
7. 3/4" CONDUIT W/COAX CABLE TO CCTV EQUIPMENT IN OFFICE #103.
8. POWER DOOR OPERATOR FURNISH WITH DOOR INSTALLED&WIRED BY ELECTRICAL.

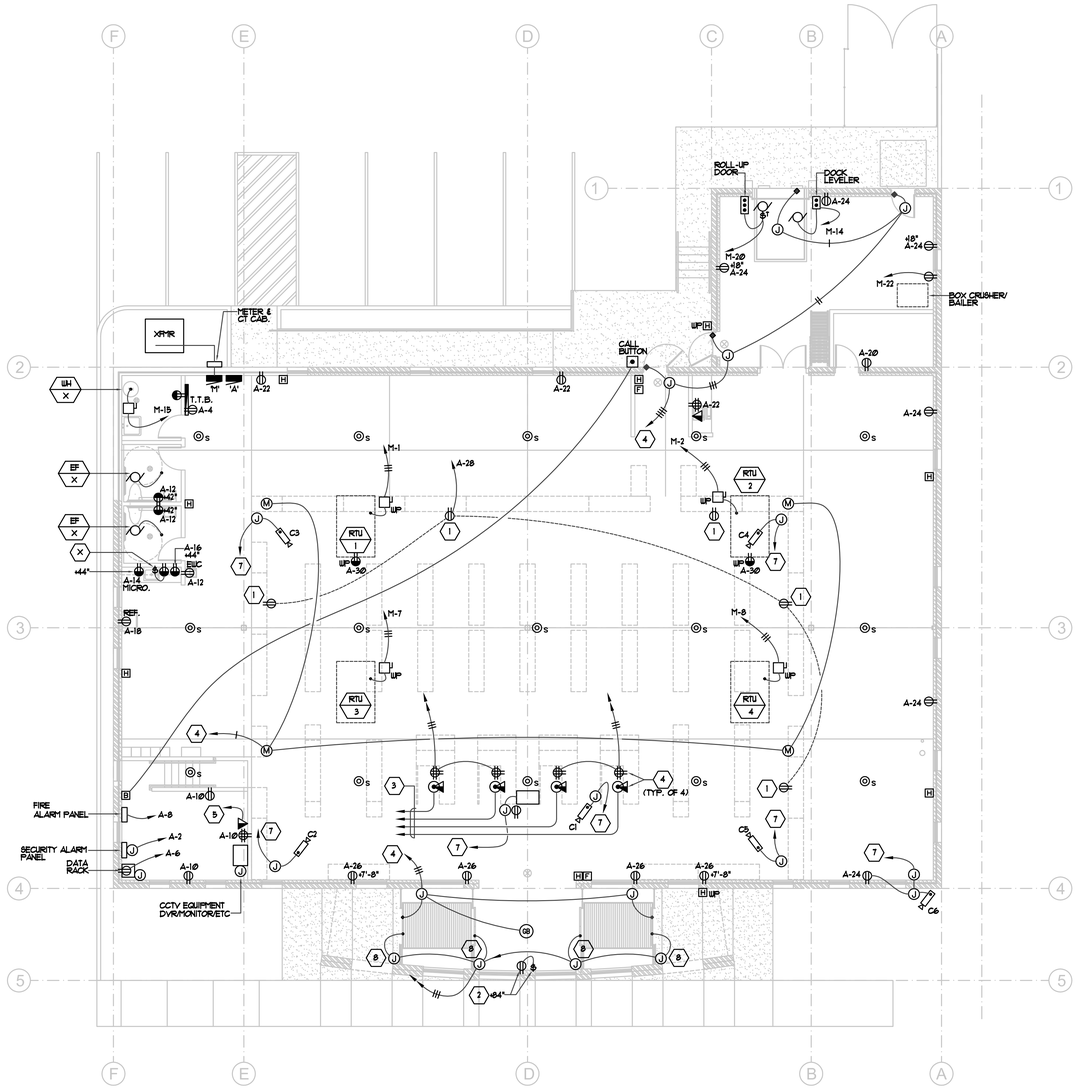

1 POWER PLAN
E2.1
SCALE: 1/8" = 1' - 0"

NEW HARRISVILLE LIQUOR STORE

DEPARTMENT OF ALCOHOLIC BEVERAGE CONTROL
WALL AVENUE, HARRISVILLE, UTAH

POWER PLAN

FRANK N MURDOCK JR ■ Architect & Associates
975 East 100 South Suite 100, Salt Lake City, Utah 84102 TEL: (801) 532-4441 FAX (801) 532-4220

REGISTERED PROFESSIONAL ENGINEER
No. 154867
DEAN P. LEVORSEN
STATE OF UTAH

REVISION #	DATE:

DFCM PROJECT NO.:
--
CONSTR. DOC.
FILE NAME: 05291.01
PLOT SCALE: AS NOTED
DRAWN BY: K.D.M.
CHECKED BY: R.K.R.
DATE: 1-11-06

PVE Inc.
Consulting Mechanical Electrical Engineers
90 South 400 West, Suite 340
Salt Lake City, UT 84101
Phone: (801) 359-3158
Fax: (801) 521-4114

E3.1

Copyright (C) 2005 by PVE, Inc. Salt Lake City, Utah. All rights reserved. Unauthorized copying and/or use is illegal and subject to prosecution.

PANELBOARD SCHEDULE

PANEL 'A' — 120/208 VOLTS — 3 PH — 4 W

MOUNTING: [ ] FLUSH [XX] SURFACE

RATING: 22,000 AIC — AMP — LOCATION: NORTH WALL — PROJECT: HARRISVILLE LIQUOR STORE

BRANCH BREAKERS

ITEM	AMPS	POLE	WIRE SIZE	CIR. NO.	LEFT PHASE LOAD A	B	C	RIGHT PHASE LOAD A	B	C	CIR. NO.	AMPS	POLE	WIRE SIZE	ITEM
LIGHTING	20	1	12	1	1500			500			2	20	1	12	SECURITY SYSTEM
				3		1500			500		4				PHONE CAB.
				5			1500			500	6				DATA RACK
				7	1500			500			8				FIRE ALARM PANEL
				9		1400			800		10				RECEPTACLES
				11			1600			800	12				RECEPTACLES
				13	1600			1200			14				MICROWAVE
				15		600			1200		16				RECEPTACELE
				17			800			800	18				
				19	1200			600			20				
SIGN LIGHTING				21		800			800		22				
POLE SIGN			10	23			800			1000	24				
SITE LIGHTING	20	2	10	25	1500			800			26				
-	-	-	-	27		1500			800		28				
SPARE				29						400	30				
				31							32				SPARE
				33							34				
				35							36				
				37							38				
				39							40				
NIGHT LIGHTS	20	1	12	41			800				42				
					7000	5500	4700	4600	4100	3500					
TOTAL					11600	5600	8200								

LOAD TOTAL 29400

FLA 82

PANELBOARD SCHEDULE

PANEL 'M' — 120/208 VOLTS — 3 PH — 4 W

MOUNTING: [ ] FLUSH [XX] SURFACE

RATING: 22,000 AIC — AMP MB — LOCATION: NORTH WALL — PROJECT: HARRISVILLE LIQUOR STORE

BRANCH BREAKERS

ITEM	AMPS	POLE	WIRE SIZE	CIR. NO.	LEFT PHASE LOAD A	B	C	RIGHT PHASE LOAD A	B	C	CIR. NO.	AMPS	POLE	WIRE SIZE	ITEM
RTU-1	60	3	6	1	7200			7200			2	60	3	6	RTU-2
	-	-	-	3		7200			7200		4	-	-	-	
	-	-	-	5			7200			7200	6	-	-	-	
RTU-3	60	3	6	7	7200			7200			8	60	3	6	RTU-4
	-	-	-	9		7200			7200		10	-	-	-	-
	-	-	-	11			7200			7200	12	-	-	-	-
PANEL A	125	3	1/0	13	11600			800			14	20	3	12	DOCK LEVELER
	-	-	-	15		5600			-		16	-	-	-	-
	-	-	-	17			8200			1100	18	-	-	-	-
				19				100			20	20	1	12	ROL-UP DOOR
				21					800		22	20	2	12	BOX CRUSHER
				23						800	24	-	-	-	-
				25							26				
				27							28				
				29							30				
				31							32				
				33							34				
				35							36				
				37							38				
				39							40				
				41							42				
					7000	6800	5400	6750	9250	9900					
TOTAL					32750	16050	25300								

LOAD TOTAL 81600

FLA 227

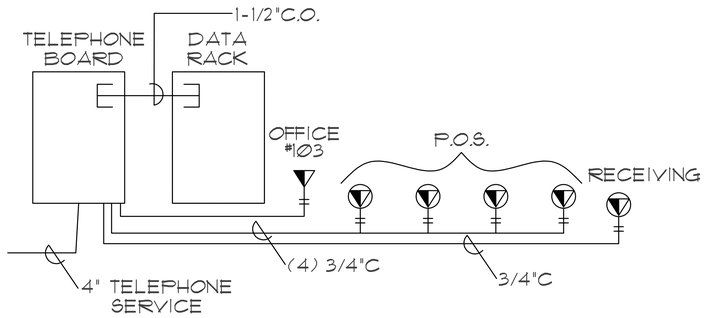

VOICE DATA WIRING DIAGRAM
SCHEMATIC

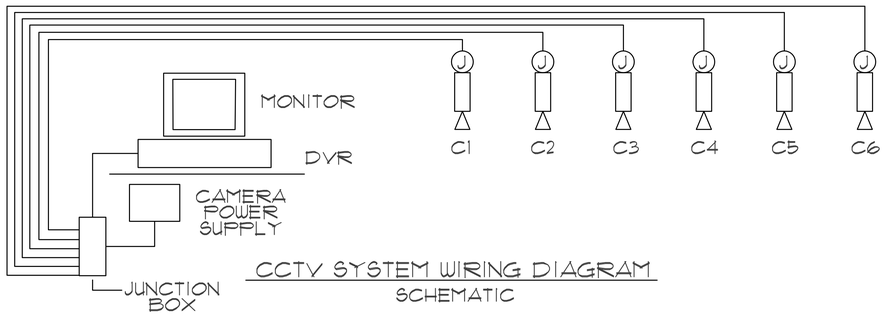

CCTV SYSTEM WIRING DIAGRAM
SCHEMATIC

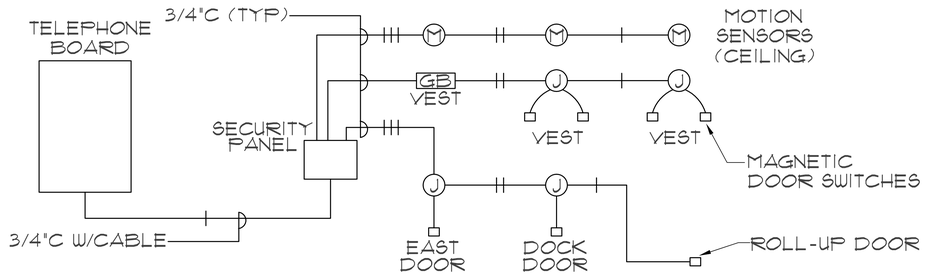

SECURITY SYSTEM WIRING DIAGRAM
SCHEMATIC

Copyright (C) 2005 by PVE, Inc. Salt Lake City, Utah. All rights reserved. Unauthorized copying and/or use is illegal and subject to prosecution.

NEW HARRISVILLE LIQUOR STORE
DEPARTMENT OF ALCOHOLIC BEVERAGE CONTROL
WALL AVENUE, HARRISVILLE, UTAH

PANEL SCHEDULES & RISER DIAGRAMS

FRANK N MURDOCK JR ■ Architect & Associates
975 East 100 South Suite 100, Salt Lake City, Utah 84102 TEL: (801) 532-4441 FAX (801) 532-4220

REGISTERED PROFESSIONAL ENGINEER
No. 154867
DEAN P. LEVORSEN
STATE OF UTAH

REVISION # DATE:

DFCM PROJECT NO.:
-
CONSTR. DOC.
FILE NAME: 05291.01
PLOT SCALE: AS NOTED
DRAWN BY: K.D.M.
CHECKED BY: R.K.R.
DATE: 1-11-06

PVE Inc.
Consulting Mechanical Electrical Engineers
90 South 400 West, Suite 340
Salt Lake City, UT 84101
Phone: (801) 359-3158
Fax: (801) 521-4114

E4.1

PIPING LEGEND

GATE VALVE		CHILLED WATER SUPPLY	CHS
OS & Y PATTERN GATE VALVE		CHILLED WATER RETURN	CHR
BALL VALVE		CONDENSER WATER SUPPLY	CWS
BUTTERFLY VALVE		CONDENSER WATER RETURN	CWR
MOTORIZED BUTTERFLY VALVE		HEATING WATER SUPPLY	HWS
HEAT TRACING		HEATING WATER RETURN	HWR
DEIONIZED WATER	DI	WATER TREATMENT	WT
CHECK VALVE		FIRE DEPT. HORN & LIGHT	
SOLENOID VALVE		HOT GAS	HG
AUTOMATIC CONTROL VALVE (2-WAY)		FLEXIBLE PIPE CONNECTION	
AUTOMATIC CONTROL VALVE (3-WAY)		REDUCED PRESSURE BACKFLOW PREVENTER	RPBP
PRESSURE REDUCING VALVE		DIRECTION OF FLOW	
P & T RELIEF VALVE		ELBOW DOWN (DN)	
AIR VENT (AUTOMATIC)		ELBOW UP	
REFRIGERANT LIQUID	RL	PIPE CAP	
REFRIGERANT SUCTION	RS	TEE DOWN	
THERMAL EXPANSION VALVE		UNION	
STRAINER		DOMESTIC COLD WATER	
CIRCUIT SETTER		DOMESTIC HOT WATER	
FLOW METER		HOT WATER CIRC.	
PET COCK OR GAUGE COCK		TEMPERED WATER	T
PRESSURE GAUGE W/GAUGE COCK		SANITARY (PLBG) VENT	
THERMOMETER		SANITARY SEWER ABOVE GRADE	
TEMPERATURE & PRESSURE TEST PLUG		SANITARY SEWER BELOW GRADE	
IN-LINE PUMP		DRAIN	D
FLOW SWITCH		ROOF DRAIN PIPING	RD
AQUASTAT		OVERFLOW DRAIN PIPING	OD
HOSE BIBB OR SILLCOCK		STORM DRAIN PIPING ABOVE GRADE	SD
VACUUM	V	STORM DRAIN PIPING BELOW GRADE	SD
FLOOR DRAIN		FIRE SERVICE	F
FLOOR SINK		NATURAL GAS	G
HOT GAS BYPASS	HGBP	COMPRESSED AIR	CA
WALL CLEANOUT OR CLEANOUT		VENT THROUGH ROOF	
FLOOR OR GRADE CLEANOUT		STEAM	S
GRADE CLEANOUT W/ CONCRETE PAD		CONDENSATE	C

MECHANICAL LEGEND

RETURN OR EXHAUST DUCT DOWN	
RETURN OR EXHAUST DUCT UP	
SUPPLY AIR DUCT DOWN	
SUPPLY AIR DUCT UP	
SPIN-IN FITTING W/MVD	
FLEXIBLE DUCT	
CEILING SLOT DIFFUSER	
CEILING DIFFUSER	
CEILING EXHAUST GRILLE	
CEILING GRILLE	
ACCESS PANEL	
MANUAL VOLUME DAMPER	
MOTORIZED DAMPER	
FIRE DAMPER	F
COMBINATION FIRE/SMOKE DAMPER	FS
THERMOSTAT OR TEMP SENSOR	T
POINT OF CONNECTION TO EXISTING	
DETAIL TAG	DETAIL NO. DRAWING NO.
KEYED NOTE	NOTE NO.
SECTION CUT LINE	SECTION NO. DRAWING NO.
CONTROL TRANSFORMER	TRX
LOW PRESSURE DUCT W/ TURNING VANES	
BALANCER TO TURN ALL SLOTS IN DIFFUSER FACING DIRECTION NOTED	

GENERAL NOTES

1. ⊗ INDICATES POINT OF CONNECTION OF NEW TO EXISTING MECHANICAL.
2. (E) INDICATES EXISTING. (N) INDICATES NEW MATERIAL.
3. COORDINATE ALL FIRE SPRINKLER, DIFFUSER AND GRILLE LOCATIONS WITH REFLECTED CEILING PLAN AND ELECTRICAL DRAWINGS.
4. THIS CONTRACTOR SHALL NOT SHUT-OFF/ PUT OUT OF SERVICE ANY SYSTEMS/SERVICES WITHOUT FIRST COORDINATING ALL DOWNTIME WITH THE OWNER'S PERSONAL.
5. ALL RIGID ROUND DUCTWORK SHALL RECEIVE 1-1/2" - 2.0 LBS/CU.FT. FIBERGLASS DUCT WRAP. ALL RECTANGULAR DUCT SHALL RECEIVE 1" - 1.5 LBS/CU.FT. DUCT LINER, TRIM AND SEAL JOINTS W/ MYLAR LINING. LOW PRESSURE ROUND FLEXIBLE DUCT TO BE 1-1/2" THICK INSULATED AND A MAXIMUM OF 10 FT. LONG. ALL INSULATION TO MEET NFPA 90 PER UL 181-CLASS 1. MEDIUM PRESSURE FLEXIBLE DUCT TO BE INSULATED, RATED FOR 6" W.C. AND SHALL BE STRETCHED OUT TO PREVENT ANY KINKS OR OFFSETS (3 FT. MAX. LENGTH).
6. DUCTWORK AND PIPE ROUTING IS APPROXIMATE, DIAGRAMATIC AND IS NOT TO BE SCALED. WHERE ALTERNATE ROUTING, OFFSETS AND TRANSITIONS ARE REQUIRED FOR COORDINATION OF ALL WORK, THIS CONTRACTOR SHALL MAKE CHANGES WITHOUT ADDITIONAL COSTS.
7. THIS CONTRACTOR SHALL CLOSELY COORDINATE NEW MECHANICAL WITH ALL NEW AND EXISTING MECHANICAL, ELECTRICAL, ARCHITECTURAL AND STRUCTURAL MEMBERS.
8. THIS CONTRACTOR SHALL FIELD VERIFY ALL MECHANICAL ITEMS PRIOR TO COMMENCING NEW WORK. NO ADDITIONAL COST WILL BE ALLOWED FOR CONTRACTOR'S FAILURE TO BECOME FAMILIAR WITH EXISTING MECHANICAL CONDITIONS.
9. THIS CONTRACTOR SHALL USE SMACNA STANDARDS FOR HIGH PRESSURE DUCT CONSTRUCTION OF SUPPLY DUCTWORK UPSTREAM OF VAV BOX - SEAL CLASS "A". ALL OTHER DUCTWORK SHALL BE CONSTRUCTED ACCORDING TO SMACNA STANDARDS FOR LOW PRESSURE DUCT CONSTRUCTION - SEAL CLASS "B".
10. ALL MECHANICAL SYSTEMS SHALL BE INSTALLED IN ACCORDANCE WITH 1991 UNIFORM BUILDING CODE, 1991 NATIONAL FIRE CODE AND UNIFORM MECHANICAL CODE 1991.
11. THIS CONTRACTOR SHALL PROVIDE SUBMITTALS ON ITEMS LISTED IN MECHANICAL EQUIPMENT LIST TO THE ENGINEER FOR REVIEW PRIOR TO THE ORDER, PURCHASE OR INSTALLATION OF THESE SAME ITEMS.
12. ALL VAV BOXES AND DIFFUSERS MUST BE BALANCED PER PLAN. PROVIDE BALANCE REPORT TO ENGINEER.
13. DUCT DIMENSIONS SHOWN ARE INSIDE CLEAR DIMENSIONS.

PLUMBING FIXTURE CONNECTION SCHEDULE

	DESCRIPTION	CONNECTION SIZE				SPECIFICATIONS
		COLD WATER	HOT WATER	WASTE	VENT	
WC-1	WATER CLOSET (HANDICAP)	¾"	N/A	3"	2½"	KOHLER K-3544-RA, SEAT: OLSONITE 95 COMFORT CURVE, COLOR: WHITE. PROVIDE SUPPLIES AND STOP. SET RIM AT 17½" AFF.
WC-2	WATER CLOSET (HANDICAP)	¾"	N/A	3"	2½"	KOHLER K-3544, SEAT: OLSONITE 95 COMFORT CURVE, COLOR: WHITE. PROVIDE SUPPLIES AND STOP. SET RIM AT 17½" AFF.
L-1	LAVATORY	½"	½"	1½"	1¼"	KOHLER: GREENWICH WALL MOUNT K-2031-N W/ ACCESSORY MODEL #1020 FOR HANDICAP INSTALLATION & K-8998 TRAP FAUCET: SYMMONS ULTRA SENSE S-6000-G W/ GRID DRAIN POWER HYDROGUARD SERIES 480 TEMPERING VALVE.
HB-1	HOSE BIBB	¾"	N/A	N/A	N/A	WOODFORD: MODEL 74P-¾
FD-1	FLOOR DRAIN	N/A	N/A	SEE PLANS	N/A	J. R. SMITH 2005 W/ A05NB NICKEL/BRONZE STRAINER AND TRAP PRIMER
FS-1	FLOOR SINK	N/A	N/A	SEE PLANS	N/A	J. R. SMITH 3140-12-Y W/ NICKEL/BRONZE TOP/ ½ GRATE AND TRAP PRIMER
SC-1	SILLCOCK	¾	N/A	N/A	N/A	J. R. SMITH 5509QT (W/ INTEGRAL VACUUM BREAKER AND STAINLESS STEEL BOX)
WCO-1	WALL CLEAN OUT	N/A	N/A	SEE PLANS	N/A	J. R. SMITH 4530
FCO-1	FLOOR CLEAN OUT	N/A	N/A	SEE PLANS	N/A	J. R. SMITH 4023
RD-1	ROOF DRAIN	N/A	N/A	N/A	N/A	J.R. SMITH 1010QY - C - R - CI DOME PROVIDE CAST IRON DOME.
OD-1	OVERFLOW DRAIN	N/A	N/A	N/A	N/A	J.R. SMITH 1080QY - C - R - CI DOME PROVIDE CAST IRON DOME.
DSN-1	DOWNSPOUT NOZZLE	N/A	N/A	N/A	N/A	J.R. SMITH 1770
WHA	WATER HAMMER ARRESTORS	AS REQUIRED	AS REQUIRED	N/A	N/A	J. R. SMITH 5010
SS-1	SERVICE SINK	¾"	¾"	3"	1½"	KOHLER: K-6710 W/ K-9142 STRAINER FAUCET: CHICAGO FAUCET MODEL # 897-RCF
S-1	SINK (SS 2 COMPARTMENT)	½"	½"	2"	1¼"	JUST: DLX-1829-A-GR WITH J35 STRAINER FAUCET: CHICAGO FAUCET MODEL # 786-9UE29CP PROVIDE W/ GARBAGE DISPOSAL UNIT GDU-1: 15E MODEL PRO 77, 1 hp, 115 V, 10, 9.0 amps
EWC-1	ELECTRIC WATER COOLER	½"	N/A	1½"	1¼"	SUNROC: NUCA-8-BL (BI LEVEL FOUNTAIN) 7.8 gph, 4.5 FLA, 415 Watts, 120v - 10, R-134A

ELECTRIC WATER HEATER SCHEDULE WH-

PLAN CODE	INPUT (KW)	RECOVERY RATE (GAL/HR)	TEMP RISE (°F)	DIMENSIONS	ELECTRICAL		MANUFACTURER & MODEL NO.	REMARKS
					VOLT & PHASE	AMPS		
WH-1	2500	13	80	26" x 18" x 21"	208 / 1	10.4	A.O. SMITH DEL-15	WITH AMTROL ST-5 EXPANSION TANK

AIR DOME AD-

PLAN CODE	AREA SERVED	DAMPER TYPE	OPENING SIZE	OPERATING WT. (LBS.)	MANUFACTURER / MODEL	COMMENTS
AD-1	ENTIRE BLDG.	GRAVITY	16" x 16"	80	PENN DOMEX DR16	WITH FACTORY 14" HIGH CURB

GAS FIRED UNIT HEATER SCHEDULE UH-

PLAN CODE	HEATING MBH OUTPUT REQ'D. ELEVATION	MANUFACTURER & MODEL NO.	SPECIFIED UNIT CAP.		CFM (STD.)	THROW AT 12' MOUNTING (FT.)	ELECTRICAL		FLUE SIZE / TYPE	SIZE				REMARKS
			INPUT (G.L.) (MBH)	OUTPUT (G.L.) (MBH)			VOLT/ PHASE	FAN H.P.		LENGTH	WIDTH	HEIGHT	WEIGHT	
UH-1	80	MODINE PD 100	100	80	1,460	41	120 / 1	1/12	6"Ø / "B"	30"	18"	29"	110 lbs.	W/T-STAT, PIPE HANGER KIT AND FACTORY 2 lb. GAS TRAIN.

ROOF TOP UNIT SCHEDULE RTU-

PLAN CODE	UNIT TONAGE	TOTAL CFM	EXTERNAL STATIC PRESSURE	DESIGN CRITERIA			LEAVING AIR TEMP	EER	SENSIBLE COOLING CAPACITY (MBH)	HEATING CAPACITY		ELECTRICAL			DIMENSIONS (in.)			OPER. WEIGHT (lbs)	MANUFACTURER & MODEL NO	REMARKS
				OUTSIDE AIR TEMP.	RETURN AIR DB	RETURN AIR WB				INPUT (MBH)	OUPUT (MBH)	VOLTS PHASE	MCA	MOP	Length	Width	Height			
RTU-1 THRU RTU-4	6	2,400	0.6	95	80	62	54.3/53.2	10.2	54.50	124.5	101.09	208 / 3	32.7	50	89	54	55	1100	TRANE YSC072A3HA	SEE GENERAL NOTES

GENERAL NOTES:

1. VALUES ARE RATED AT 4,500 FT. ELEVATION.
2. PROVIDE MINIMUM OUTSIDE AIR SET POINTS.
3. PROVIDE 14" FACTORY CURB.
4. PROVIDE ECONOMIZER AND POWER EXHAUST.
5. PROVIDE FACTORY 2 lb. GAS TRAIN.
6. PROVIDE COMPRESSOR CRANKCASE HEATER.
7. ALL ROOFTOP UNITS MUST MEET OR EXCEED CURRENT ASHRAE ENERGY CODE 90.1 STANDARDS.
8. PROVIDE FACTORY HACR CIRCUIT BREAKER.
9. PROVIDE 7 DAY PROGRAMMABLE T-STAT WITH 100 ft. OF PLENUM RATED T-STAT WIRE.
10. PROVIDE FACTORY MOUNTED CONV. OUTLET TO BE FIELD WIRED.
11. PROVIDE SMOKE DETECTOR IN SUPPLY & RETURN AIR DUCTWORK.
12. PROVIDE COIL GUARDS.

AIR DEVICE SCHEDULE

GRILLE NUMBER — GRILLE CFM

PLAN CODE	TYPE & DUTY	NECK SIZE	CEILING TYPE	N.C. LEVEL MAX	MAX. CFM	MANUFACTURER & MODEL NO.	REMARKS
1	RETURN	10" x 22"	See Plans	10	610	PRICE 22" x 10" / 24" x 12" / PDDR / 3 / BI2	PROVIDE W/ SOUND BOOT
2	RETURN	22" x 22"	See Plans	10	1340	PRICE 22" x 22" / 24" x 24" / PDDR / 3 / BI2	PROVIDE W/ DUCT COLLAR
3	EXHAUST	6"Ø	See Plans	15	170	PRICE 6"Ø / 12" x 12" / PDDR / 2 / BI2	PROVIDE OBD
4	EXHAUST	14" x 14"	See Plans	31	490	PRICE 10"Ø / 16" x 16" / PDDR / 2 / BI2	PROVIDE OBD
5	SUPPLY	8"Ø	See Plans	20	280	PRICE 8"Ø / 24" x 24" / SCDA / 3 / BI2	
6	SUPPLY	10"Ø	See Plans	20	420	PRICE 10"Ø / 24" x 24" / SCDA / 3 / BI2	
7	SUPPLY	12"Ø	See Plans	20	560	PRICE 12"Ø / 24" x 24" / SCDA / 3 / BI2	
8	SUPPLY	8"Ø	See Plans	20	240	PRICE 8"Ø / 24"Ø / RCD / BI2	
9	SUPPLY	10Ø	See Plans	20	380	PRICE 10"Ø / 24"Ø / RCD / BI2	
10	SUPPLY	12"Ø	See Plans	20	550	PRICE 12"Ø / 24"Ø / RCD / BI2	

EXHAUST FAN SCHEDULE EF-

PLAN CODE	AREA SERVED	TYPE	CFM @ ELEV.	ESP	FAN RPM	MOTOR		SONES	DAMPER TYPE	METHOD OF CONTROL	OPENING SIZE	OPERATING WT. (LBS.)	MANUFACTURER / MODEL	
						WATTS	VOLTAGE & PHASE							
EF-1 THRU EF-4	RESTROOM	CEILING	100	0.75	1050	84	120 / 1	3.7	GRAVITY	WALL SWITCH	6" x 8"	45	PENN ZEPHYR ZB16(TDA)	PROVIDE CEILING GRILLE

Copyright (C) 2005 by PVE, Inc. Salt Lake City, Utah. All rights reserved. Unauthorized copying and/or use is illegal and subject to prosecution.

PVE Inc.
Consulting Mechanical Electrical Engineers
90 South 400 West, Suite 340
Salt Lake City, UT 84101
Phone: (801) 359-3158
Fax: (801) 521-4114

NEW HARRISVILLE LIQUOR STORE
DEPARTMENT OF ALCOHOLIC BEVERAGE CONTROL
WALL AVENUE, HARRISVILLE, UTAH

FRANK N MURDOCK JR ■ Architect & Associates
975 East 100 South Suite 100, Salt Lake City, Utah 84102 TEL: (801) 532-4441 FAX (801) 532-4220

MECHANICAL SCHEDULES

Patrick T. Carlquist REGISTERED PROFESSIONAL ENGINEER 323760 State of Utah

REVISION # DATE:

DFCM PROJECT NO.: 05291.00
CONSTR. DOC.
FILE NAME: SEE SHEET
PLOT SCALE: SEE SHEET
DRAWN BY: AJG
CHECKED BY: KAG
DATE: 01/20/06

M0.1

Copyright (C) 2005 by PVE, Inc. Salt Lake City, Utah. All rights reserved. Unauthorized copying and/or use is illegal and subject to prosecution.

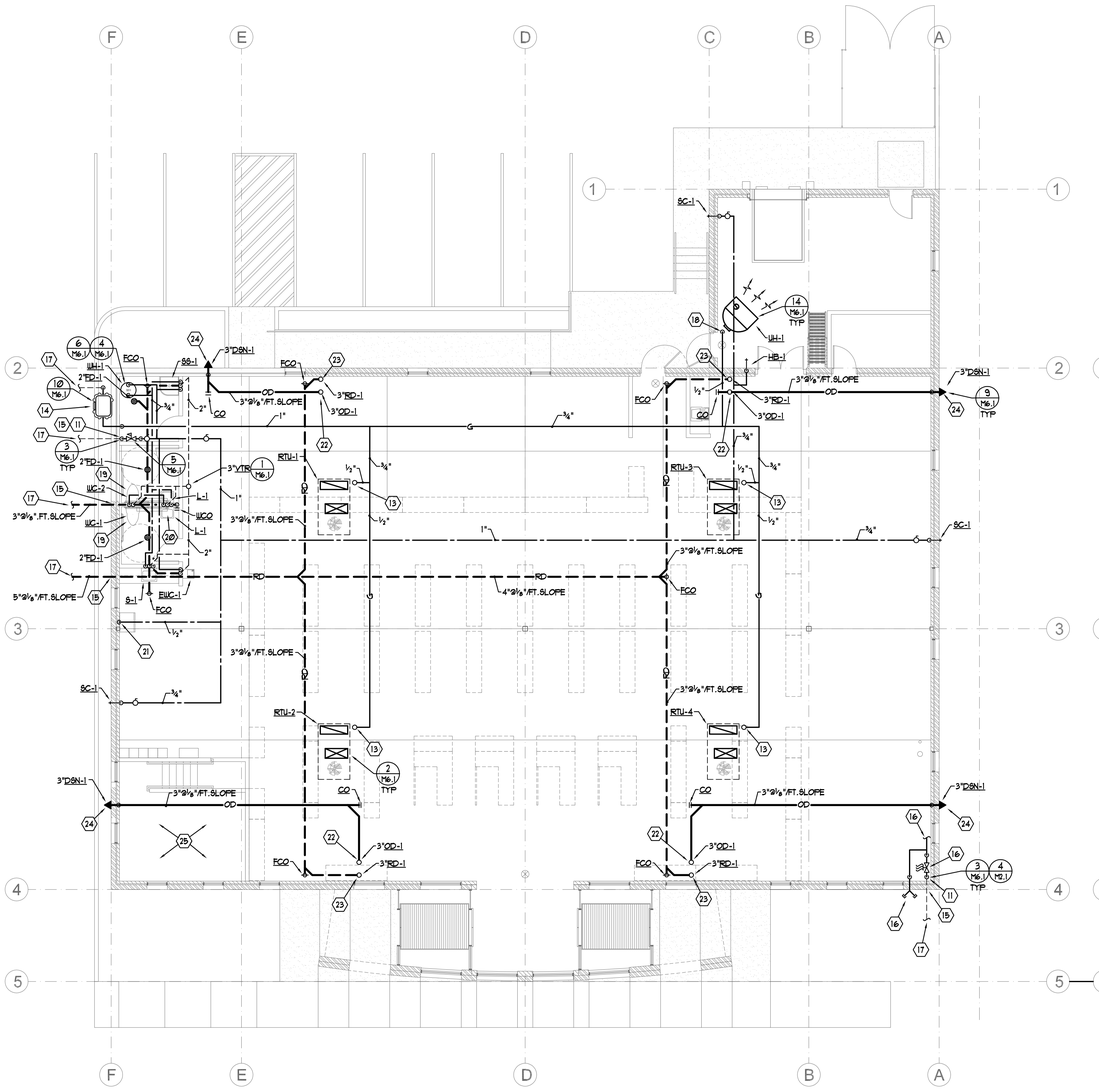

PLUMBING FLOOR PLAN

SCALE: 1/8" = 1' - 0" 6' 0 4' 8' 12' 16'

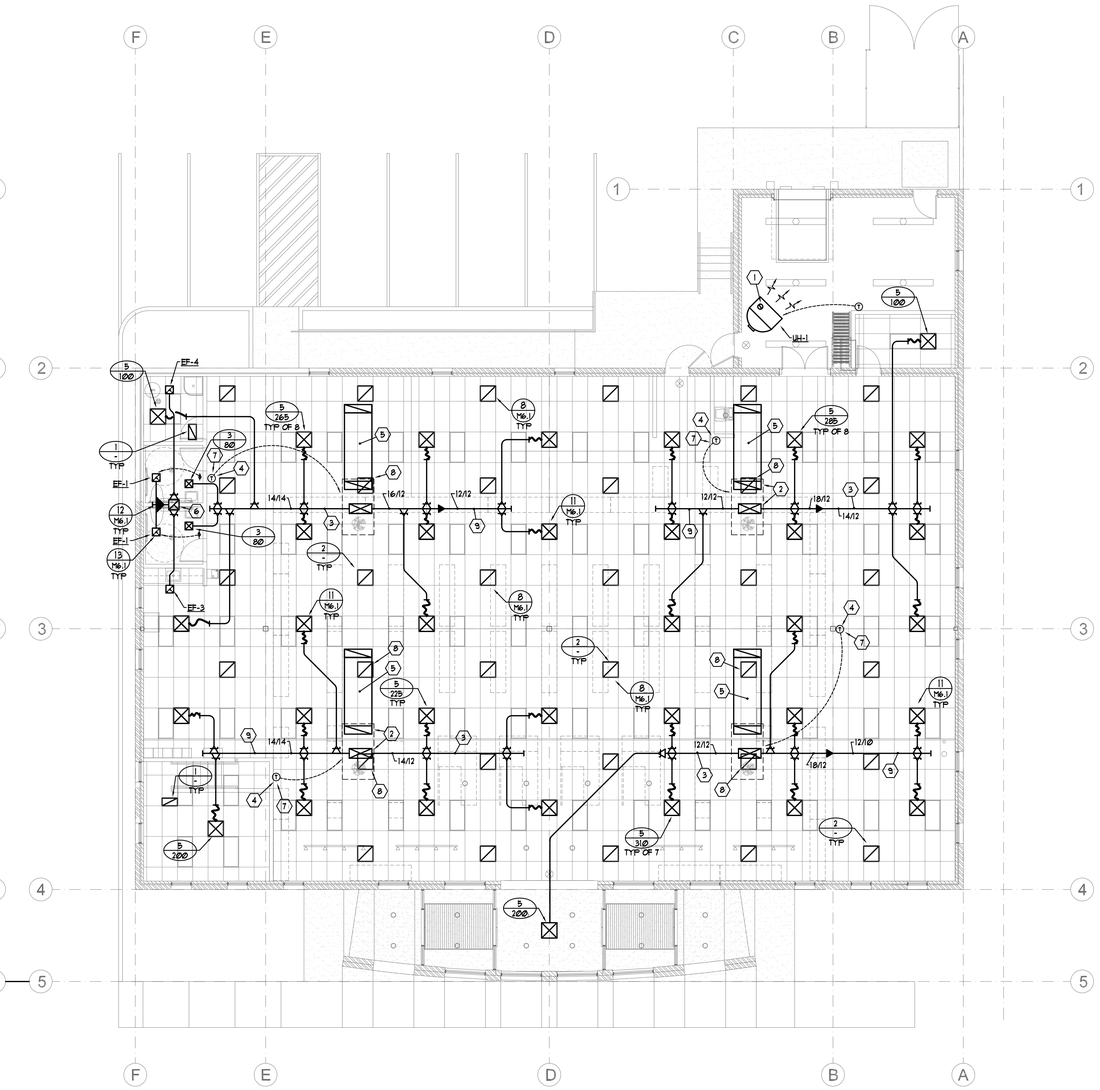

MECHANICAL FLOOR PLAN

SCALE: 1/8" = 1' - 0" 6' 0 4' 8' 12' 16'

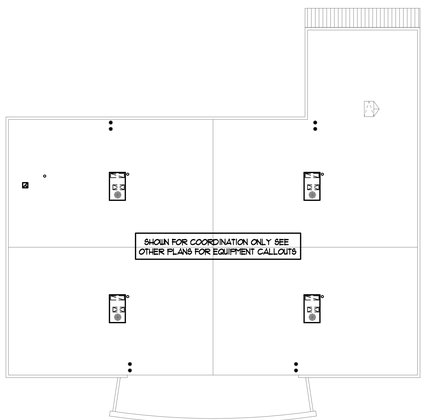

ROOF PLAN

SCALE: 1/16" = 1' - 0"

KEYED NOTES:

1. 6" TYPE "B" FLUE UP THROUGH ROOF SEE DETAIL 6/M6.2
2. PROVIDE AND INSTALL DUCTWORK DROPS DOWN FROM UNIT SIZED FULL SIZE OF UNITS OPENINGS. (TYPICAL)
3. COORDINATE WITH ROOF STRUCTURAL AND INSTALL DUCTWORK TIGHT TO BOTTOM OF STRUCTURE. IF POSSIBLE ROUTE MAINS UP IN BETWEEN JOIST. (TYPICAL)
4. COORDINATE WITH ARCH'S PLANS FOR FINAL ELEVATIONS AND LOCATIONS OF 7-DAY PROGRAMMABLE T-STATS. (TYPICAL)
5. PROVIDE A MINIMUM OF 10FT. OF LINED RETURN DUCTWORK WITH OPENING UPWARD AT THE END. (TYPICAL)
6. 12"X12" RISER TO AIR DOME AD-1 ON ROOF.
7. PROVIDE LOCKING COVER FOR T-STAT.
8. RETURN AIR GRILLE LOCATED UNDER RETURN AIR DUCTWORK OR RTU.
9. HOLD DUCTWORK TIGHT TO BOTTOM OF STRUCTURE. (TYPICAL)
10. 3" RISER TO ROOF AND OVERFLOW DRAINS ON ROOF.
11. DROP PIPING TIGHT ALONG WALL TO ROUTE BELOW SLAB.
12. EXTEND DOWN SPOUTS OUT OF BUILDING UP HIGH. COORDINATE FINAL ELEVATIONS WITH ARCH'S PLANS.
13. ½" GAS RISER TO ROOF TOP UNIT. M.C. TO PROVIDE FINAL CONNECTIONS REQUIRED.
14. 865 CFH (2 LB) GAS METER BY QUESTAR. GAS METER AND ENTRY BY QUESTAR.
15. M.C. TO FIELD VERIFY AND COORDINATE WITH ARCH'S AND CIVIL'S PLANS IN PROVIDING CODE REQUIRED COVERAGE OVER ALL PLUMBING LINES ENTERING & EXISTING THE BUILDING.
16. ALL FIRE PROTECTION PIPING TO BE SIZED BY F.P.C. MAIN FIRE WATER TO ENTER BUILDING AT THIS POINT. F.P.C. TO PROVIDE REQUIRED FIRE DEPARTMENT CONNECTION WITH HORN, LIGHTS AND STROBE ON EXTERIOR OF BUILDING.
17. M.C. TO EXTEND ALL UTILITIES 5FT. OUTSIDE OF BUILDING.
18. PROVIDE FINAL CONNECTION TO UNIT HEATER.
19. M.C. TO PROVIDE WATER HAMMER ARRESTORS ON ALL PIPING WITH QUICK CLOSE VALVES. (TYPICAL)
20. PROVIDE HOSE BIBB UNDER LAVRATORY. (TYPICAL)
21. PROVIDE ICE MAKER CONNECTION BOX AT REFRIGERATOR.
22. ROOF AND OVERFLOW DRAIN RISERS TO ROOF.
23. DROP ROOF DRAIN PIPING DOWN TIGHT ALONG WALL TO ROUTE BELOW SLAB.
24. COORDINATE WITH ARCH'S PLANS FOR FINAL LEAVING ELEVATION OF DOWN SPOUT NOZZLES. (TYPICAL)
25. FIRE PROTECTION CONTRACTOR TO PROVIDE FIRE PROTECTION SYSTEM PIPING UNDER OFFICE MEZZANINE FLOOR.

GENERAL NOTES:

1. ALL EXPOSED DUCTWORK OR DUCTWORK ABOVE GYP. CEILINGS SHALL BE HARD DUCTED.
2. USE YOUNG GEAR TYPE BALANCING REGULATORS ABOVE ALL GYP. BOARD CEILINGS.
3. ALL MEDIUM PRESSURE DUCTWORK SHALL BE HELD TIGHT TO BOTTOM OF STRUCTURE. OFFSET AND TRANSITION AS REQUIRED.
4. OFFSET AND TRANSITION ALL DUCTWORK AND PIPING AS REQUIRED.
5. ALL VALVES SHALL BE LOCATED ABOVE ACCESSIBLE CEILINGS.
6. PROVIDE ACCESS PANELS AS REQUIRED.
7. CONTRACTOR TO COORDINATE ALL INSTALLATIONS WITH OTHER TRADES.
8. CONTRACTOR TO COORDINATE ALL FINAL LOCATION OF T-STAT'S WITH OWNER AND ARCHITECT.
9. CONTRACTOR TO PROVIDE AND INSTALL SOUND BOOTS ON ALL RETURN AIR GRILLES. BOOTS TO BE PAINTED FLAT BLACK.
10. CONTRACTOR TO COORDINATE GRILLES WITH REFLECTED CEILING GRID.
11. CONTRACTOR TO COORDINATE WITH ELECTRICAL AND DO NOT ROUTE PIPING OVER ELECTRICAL EQUIPMENT.
12. ALL PIPING SHALL BE HELD TIGHT TO BOTTOM OF STRUCTURE.
13. PROVIDE 4" DEEP SEAL TRAPS WITH TRAP PRIMERS ON ALL FLOOR DRAINS & FLOOR SINKS.
14. ALL WASTE PIPING TO BE SLOPED AS REQUIRED BY CODE.

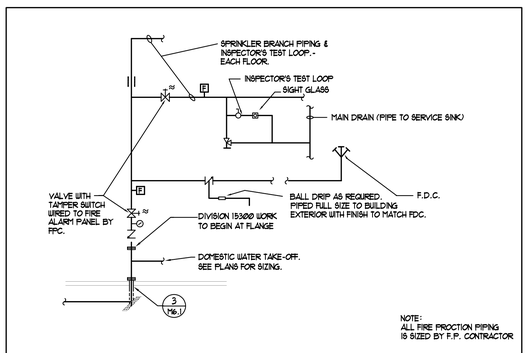

4 / M2.1 TYPICAL FIRE SPRINKLER SERVICE ENTRY DETAIL

NOT TO SCALE

PVE Inc. Consulting Mechanical Electrical Engineers
90 South 400 West, Suite 340
Salt Lake City, UT 84101
Phone: (801) 359-3158
Fax: (801) 521-4114

NEW HARRISVILLE LIQUOR STORE

DEPARTMENT OF ALCOHOLIC BEVERAGE CONTROL
WALL AVENUE, HARRISVILLE, UTAH

FRANK N MURDOCK JR ■ Architect & Associates
975 East 100 South Suite 100, Salt Lake City, Utah 84102 TEL: (801) 532-4441 FAX: (801) 532-4220

MECHANICAL FLOOR PLANS

PATRICK T. CARLISLE REGISTERED 323760 PROFESSIONAL ENGINEER State of Utah

REVISION # DATE:

DFCM PROJECT NO.: 05291.00
CONSTR. DOC.
FILE NAME: SEE SHEET
PLOT SCALE: SEE SHEET
DRAWN BY: AJG
CHECKED BY: KAG
DATE: 01/20/06

M2.1

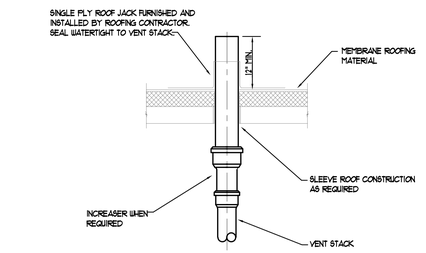

1 M6.1 VENT THROUGH ROOF DETAIL

NOT TO SCALE

Note: ROOF TOP UNIT AND CURB SHOULD BE INSTALLED TO MEET LOCAL SEISMIC ZONE REQUIREMENTS. M.C. TO FOLLOW SEISMIC ENGINEER ON RECORD DETAILING AND REQUIREMENTS TO MEET LOCAL SEISMIC ZONE REQUIREMENTS.

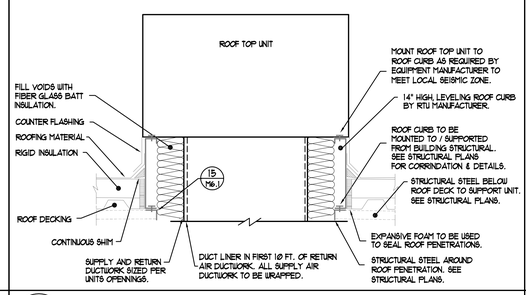

2 M6.1 ROOF TOP UNIT CURB DETAIL

NOT TO SCALE

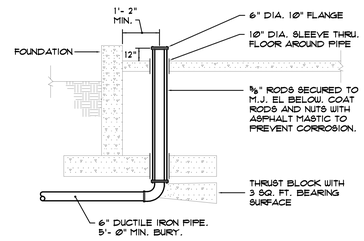

3 M6.1 WATER ENTRY DETAIL

NOT TO SCALE

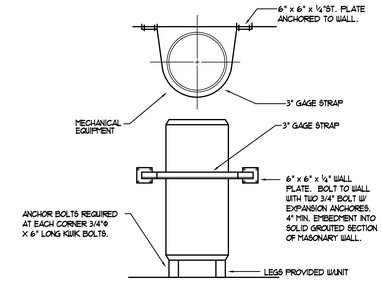

4 M6.1 FLOOR MOUNTED EQUIPMENT ANCHOR & STRAP DETAIL

NOT TO SCALE

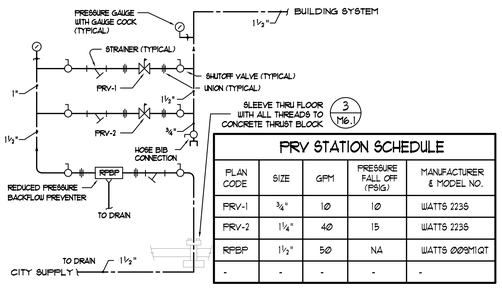

PRV STATION SCHEDULE				
PLAN CODE	SIZE	GPM	PRESSURE FALL OFF (PSIG)	MANUFACTURER & MODEL NO.
PRV-1	¾"	10	10	WATTS 2235
PRV-2	1¼"	40	15	WATTS 2235
RPBP	1½"	50	NA	WATTS 009SM1QT
-	-	-	-	-

5 M6.1 PRV STATION DETAIL

NOT TO SCALE

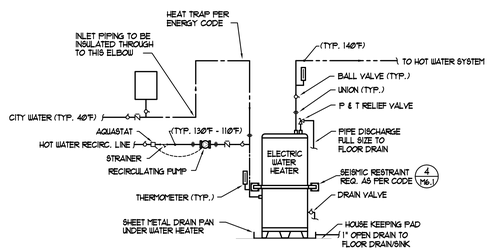

6 M6.1 ELECTRIC WATER HEATER PIPING DETAIL

NOT TO SCALE

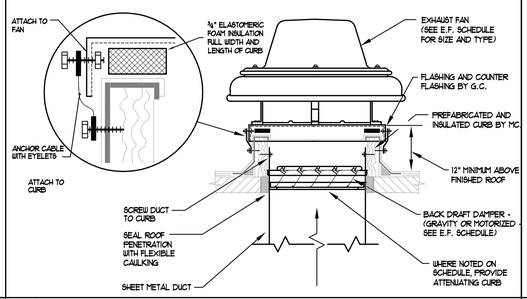

7 M6.1 EXHAUST FAN AND CURB DETAIL

NOT TO SCALE

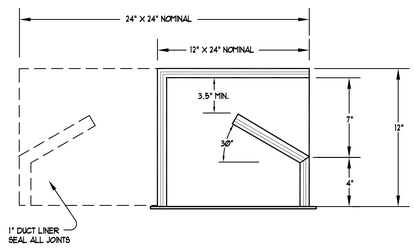

TYPICAL OF ALL RETURN AIR GRILLES

8 M6.1 RETURN AIR GRILLE SOUND BOOT DETAIL

NOT TO SCALE

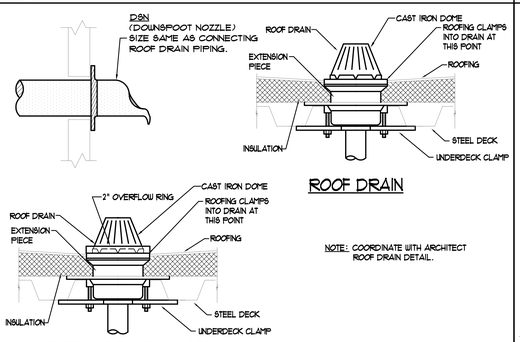

ROOF DRAIN

NOTE: COORDINATE WITH ARCHITECT ROOF DRAIN DETAIL.

OVERFLOW ROOF DRAIN

9 M6.1 ROOF DRAIN & OVERFLOW ROOF DRAIN DETAIL

NOT TO SCALE

CONTRACTOR IS TO COORDINATE WITH OWNER AND OWNER'S INSURANCE COMPANY ON ISTALLATION OF IAPMO APPROVED SEISMIC SHUT-OFF VALVE IS REQUIRED. NOTE: VALVE IS NOT REQUIRED BY QUESTAR GAS.

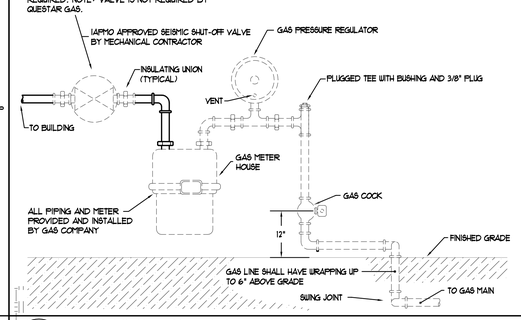

10 M6.1 GAS METER SERVICE CONNECTION DETAIL

NOT TO SCALE

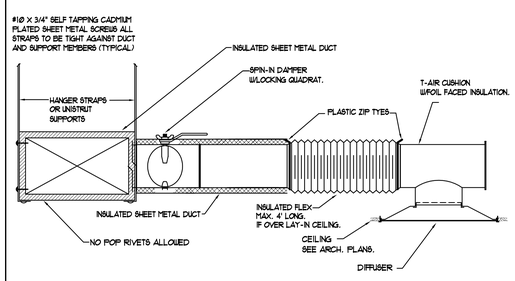

11 M6.1 DIFFUSER MOUNTING DETAIL

NOT TO SCALE

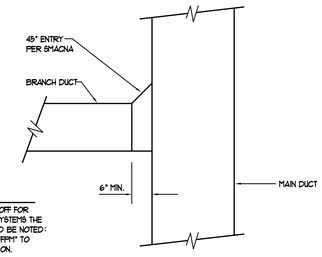

NOTE:
WHEN USING THIS TAKE-OFF FOR HIGH VELOCITY DUCT SYSTEMS THE ENTRY OPENING SHOULD BE NOTED: "NOT TO EXCEED 1500 FPM" TO AVOID NOISE GENERATION.

12 M6.1 TYPICAL DUCT TAKEOFF DETAIL

NOT TO SCALE

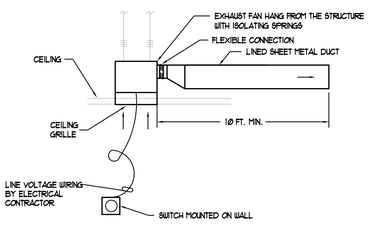

13 M6.1 CEILING EXHAUST FAN DETAIL

NOT TO SCALE

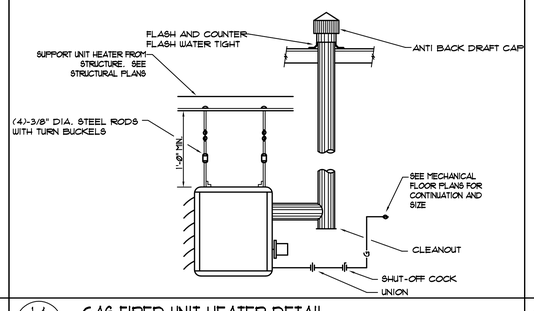

14 M6.1 GAS FIRED UNIT HEATER DETAIL

NOT TO SCALE

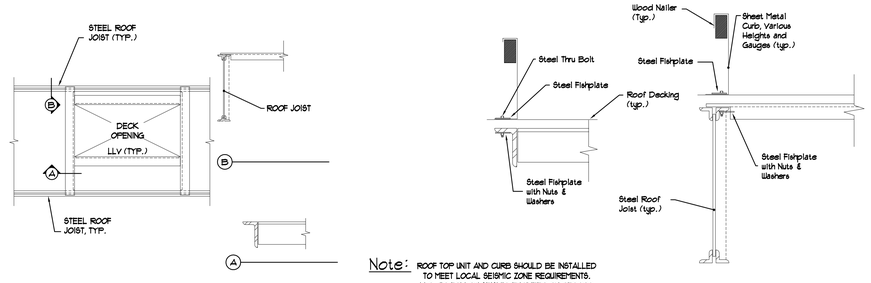

Note: ROOF TOP UNIT AND CURB SHOULD BE INSTALLED TO MEET LOCAL SEISMIC ZONE REQUIREMENTS. M.C. TO FOLLOW SEISMIC ENGINEER ON RECORD DETAILING AND REQUIREMENTS TO MEET LOCAL SEISMIC ZONE REQUIREMENTS.

15 M6.1 ROOF CURB SEISMIC DETAIL (See Structural Plan for final detailing)

NOT TO SCALE

Copyright (C) 2005 by PVE, Inc. Salt Lake City, Utah. All rights reserved. Unauthorized copying and/or use is illegal and subject to prosecution.

PVE Inc. Consulting Mechanical Electrical Engineers
90 South 400 West, Suite 340
Salt Lake City, UT 84101
Phone: (801) 359-3158
Fax: (801) 521-4114

NEW HARRISVILLE LIQUOR STORE
DEPARTMENT OF ALCOHOLIC BEVERAGE CONTROL
WALL AVENUE, HARRISVILLE, UTAH

MECHANICAL DETAILS

FRANK N MURDOCK JR ■ Architect & Associates
975 East 100 South Suite 100, Salt Lake City, Utah 84102 TEL: (801) 532-4441 FAX (801) 532-4220

Patrick T. Campbell REGISTERED 323760 PROFESSIONAL ENGINEER State of Utah

REVISION # DATE:

DFCM PROJECT NO.: 05291.00
CONSTR. DOC.
FILE NAME: SEE SHEET
PLOT SCALE: SEE SHEET
DRAWN BY: AJG
CHECKED BY: KAG
DATE: 01/20/06

M6.1

STRUCTURAL NOTES

GENERAL

1 ALL DESIGN, CONSTRUCTION, AND INSPECTION SHALL BE IN CONFORMANCE WITH THE LATEST EDITION OF THE 2003 INTERNATIONAL BUILDING CODE.

2 THE CONTRACTOR SHALL VERIFY ALL DIMENSIONS AND CONDITIONS AT THE SITE.

3 ALL OMISSIONS OR CONFLICTS BETWEEN THE VARIOUS ELEMENTS OF THE WORKING DRAWINGS AND/OR SPECIFICATIONS SHALL BE BROUGHT TO THE ATTENTION OF THE ARCHITECT AND/OR STRUCTURAL ENGINEER BEFORE PROCEEDING WITH ANY WORK INVOLVED.

4 CONTRACTOR SHALL BE RESPONSIBLE FOR SAFETY AND PROTECTION WITHIN AND ADJACENT TO THE JOB SITE.

5 TEMPORARY SHORING AND BRACING SHALL BE PROVIDED WHEREVER NECESSARY TO TAKE CARE OF ALL LOADS TO WHICH THE STRUCTURE MAY BE SUBJECTED INCLUDING WIND. SUCH BRACING SHALL BE LEFT IN PLACE AS LONG AS MAY BE REQUIRED FOR SAFETY OR UNTIL ALL THE STRUCTURAL ELEMENTS ARE COMPLETE.

6 DURING AND AFTER CONSTRUCTION THE CONTRACTOR AND/OR OWNER SHALL KEEP LOADS ON THE STRUCTURE WITHIN THE LIMITS OF THE DESIGN LOADS.

7 THE GENERAL CONTRACTOR SHALL HAVE SHOP DRAWINGS REVIEWED BY THE ARCHITECT PRIOR TO THE FABRICATION OR ERECTION FOR THE FOLLOWING ITEMS: REINFORCING STEEL, STRUCTURAL STEEL, MISCELLANEOUS METALS, PREFABRICATED STEEL JOISTS, METAL ROOF DECK.

8 ALL DETAILS, SECTIONS, AND NOTES ARE INTENDED TO BE TYPICAL AND SHALL APPLY TO SIMILAR SITUATIONS UNLESS NOTED OR SHOWN OTHERWISE.

9 REFER TO THE SPECIFICATIONS FOR ADDITIONAL INFORMATION NOT COVERED ON THE DRAWINGS.

10 OBSERVATION VISITS TO THE JOB SITE BY FIELD REPRESENTATIVES OF CALDER–KANKAINEN SHALL NEITHER BE CONSTRUED AS INSPECTION NOR APPROVAL OF CONSTRUCTION.

11 SIZES, LOCATIONS, AND ANCHORAGES OF EQUIPMENT SHALL BE VERIFIED IN THE FIELD WITH EQUIPMENT MANUFACTURERS (SUPPLIERS) PRIOR TO PLACING CONCRETE OR FABRICATING STEEL.

FOOTINGS

1 ALL FOOTINGS SHALL BEAR 12" MINIMUM INTO ORIGINAL UNDISTURBED EARTH OR ON ENGINEERED FILL COMPACTED TO 95% OF MAXIMUM RELATIVE DENSITY BASED ON ASTM D1557–91. SUCH FILL SHALL BE PLACED IN LAYERS NOT TO EXCEED 6" IN DEPTH AFTER COMPACTION AND SHALL EXTEND DOWN TO IN–SITU GRANULAR SOILS.

2 FOOTING ELEVATIONS SHOWN ON PLAN ARE TOP OF FOOTINGS AND ARE MINIMUM DEPTH. DIFFERENT OR UNUSUAL CONDITIONS SHALL BE REPORTED TO THE ARCHITECT AND/OR ENGINEER.

3 EXTERIOR WALL FOOTINGS SHALL BEAR AT A MINIMUM DEPTH OF 2'–6" BELOW FINISHED EXTERIOR GRADE.

4 NO FOOTINGS SHALL BE PLACED IN WATER OR ON FROZEN GROUND.

5 ANY SOIL CONDITION ENCOUNTERED DURING EXCAVATION THAT IS CONTRARY TO THE CONDITIONS USED FOR DESIGN OF FOOTINGS AS OUTLINED IN THE SOILS REPORT FOR THE PROJECT, OR ON THE DRAWINGS SHALL BE BROUGHT TO THE ATTENTION OF THE ARCHITECT BEFORE PROCEEDING.

6 DO NOT BACK FILL BEHIND FOUNDATION WALLS UNTIL TOP AND BOTTOM SLABS HAVE BEEN POURED AND ATTAINED THEIR DESIGN STRENGTHS.

7 BACK FILL BOTH SIDES OF FOUNDATION WALLS AT SAME TIME TO PREVENT OVERTURNING.

8 WALL FOOTINGS, WHERE NOT SHOWN OTHERWISE, SHALL BE 12" THICK WITH A 8" SPREAD EACH SIDE OF WALL AND PROVIDE 1 #5 CONTINUOUS AT BOTTOM FOR EACH 8" OF FOOTING WIDTH.

9 WHERE 6" DIAMETER OR LARGER PIPE PASSES THROUGH AN INTERIOR OR EXTERIOR FOUNDATION WALL, STEP THE FOOTING DOWN TO PASS BELOW PIPE AND THEN STEP BACK UP TO INDICATED ELEVATION. PROVIDE PIPE SLEEVE THROUGH FOUNDATION WALL.

10 ALL FOOTING EXCAVATIONS SHALL BE EXAMINED BY A GEOTECHNICAL ENGINEER FOR VERIFICATION OF ADEQUATE BEARING CONDITIONS BEFORE PLACING CONCRETE.

CONCRETE

1 CONCRETE SHALL ATTAIN THE FOLLOWING MINIMUM COMPRESSIVE STRENGTHS AT 28 DAYS:
FOOTINGS & FOUNDATION WALLS.....3000 PSI
INTERIOR SLABS ON GRADE.....4000 PSI
EXTERIOR FLAT WORK.....4000 PSI

2 A STATEMENT OF MIX DESIGN FOR ALL CONCRETE SHALL BE SUBMITTED TO AND REVIEWED BY THE STRUCTURAL ENGINEER PRIOR TO COMMENCING WORK.

3 ALL CONCRETE WORK SHALL BE PLACED, CURED, STRIPPED, AND PROTECTED AS DIRECTED BY THE SPECIFICATIONS AND ACI STANDARDS AND PRACTICES.

4 UNLESS NOTED OTHERWISE ON THE DRAWINGS, REINFORCE CONCRETE WALLS AS FOLLOWS:
6" WALL #4 @ 15" HOR., #4 @ 18" VERT..IN CENTER OF WALL
8" WALL #5 @ 18" HOR., #4 @ 18" VERT..IN CENTER OF WALL
10" WALL #5 @ 15" HOR., #4 @ 14" VERT..IN CENTER OF WALL
12" WALL #4 @ 12" HOR., EACH FACE, #4 @12" VERTICAL EACH FACE.

5 DOWEL VERTICAL BARS 36 DIAMETERS INTO STRUCTURE ABOVE AND FOOTINGS BELOW. PROVIDE 90? HOOK WHERE 36 DIAMETER IS NOT POSSIBLE. IN ADDITION, PROVIDE 2–#5 CONTINUOUS BARS TOP AND BOTTOM OF 6" AND 8" WALLS AND 2–#6 BARS TOP AND BOTTOM OF WALLS 10" OR THICKER.

6 BEFORE CONCRETE IS POURED CHECK WITH ALL TRADES TO ENSURE PROPER PLACEMENT OF ALL OPENINGS, SLEEVES, CURBS, CONDUITS, BOLTS, INSERTS, ETC. RELATIVE TO WORK.

7 ADD 2–#5 BARS MINIMUM AROUND ALL OPENINGS (UNLESS OTHERWISE NOTED) AND EXTEND 24" BEYOND CORNER OF OPENING.

8 WHERE OPENINGS LARGER THAN 16" IN ANY DIRECTION OCCUR IN WALLS OR SLABS, PROVIDE SAME SIZE ADDITIONAL FULL LENGTH REINFORCING AT EACH SIDE OF OPENING EQUAL TO 1/2 THE NUMBER OF BARS INTERRUPTED BY THE OPENING. SPACE ADDITIONAL BARS AT 4 X BAR DIAMETERS.

9 ALL SLABS ON GRADE SHALL BE PLACED IN ALTERNATE PANELS WITH A MAXIMUM WIDTH OF 20' BETWEEN CONTROL OR CONSTRUCTION JOINTS; REFER TO TYPICAL DETAILS ON DRAWINGS. UNLESS OTHERWISE NOTED, SLABS ON GRADE SHALL BE 4" THICK AND SHALL BE REINFORCED WITH 6 x 6 – W1.4 x W1.4 WELDED WIRE FABRIC.

10 PROVIDE A #3 NOSING BAR IN ALL STAIR TREADS.

11 REFER TO DRAWINGS FOR TYPICAL CONSTRUCTION JOINT DETAILS. UNLESS NOTED IN DRAWINGS, ALL REINFORCEMENT SHALL BE CONTINUOUS THRU JOINTS AND EACH CONSTRUCTION JOINT SHALL BE KEYED.

12 FORMS, SCREEDS, AND BEAMS SUPPORTING SUSPENDED CONCRETE SHALL BE CAMBERED 1/4 INCHES PER 10 FEET OF SPAN TO COMPENSATE FOR DEAD LOAD DEFLECTIONS.

13 WHERE EXTERIOR SLABS ON GRADE ABUT WALLS OR COLUMNS PROVIDE 3/8" PREFORMED EXPANSION JOINT WITH SEALANT.

14 WHERE INTERIOR MASONRY WALLS DO NOT BEAR ON A FOOTING PROVIDE A TYPICAL THICKENED SLAB (12" THICK X 16" WIDE) UNDER WALL. REINFORCE WITH 2– #4 CONTINUOUS. DOWEL WALL REINFORCING TO SLAB.

MASONRY (CMU)

1 ALL MASONRY SHALL BE REINFORCED WITH BOTH HORIZONTAL AND VERTICAL REINFORCEMENT. ALL BLOCK CELLS OR BRICK CAVITIES WITH REINFORCEMENT SHALL BE GROUTED FULL USING CONCRETE 2000 PSI GROUT. CELLS SHALL BE ALIGNED TO PRESERVE UNOBSTRUCTED VERTICAL CAVITIES OF 2" x 3" MINIMUM.

2 CONCRETE FOR BLOCK FILL SHALL HAVE 3/8 INCH MAXIMUM SIZE COURSE AGGREGATE AND SUFFICIENT WATER SO THE CONCRETE WILL FLOW INTO THE BLOCK CELLS WITHOUT LEAVING VOIDS. WHERE BEAMS BEAR ON CONCRETE BLOCK WALLS. BLOCK CELLS SHALL BE FILLED WITH CONCRETE 1' –4" WIDE TO FOUNDATION AND REINFORCE WITH A #5 EACH CELL, UNLESS OTHERWISE SHOWN.

3 AN ADDITIONAL VERTICAL BAR (MATCHING WALL REINFORCEMENT) SHALL BE PLACED AT EACH CORNER, END OF WALL, AND JAMB OF ALL OPENINGS.

4 ALL STEEL JOIST, JOIST GIRDER, AND STEEL BEAM POCKETS IN MASONRY SHALL BE GROUTED SOLID UNLESS OTHERWISE INDICATED ON THE DRAWINGS.

5 HORIZONTAL BARS SHALL BE PLACED IN BOND BEAMS FILLED WITH GROUT AT THE TOP OF ALL WALLS AND AT 48" O.C. MAXIMUM BETWEEN TOP OF WALL AND FOUNDATION. BOND BEAM UNITS AND REINFORCING SHALL CONTINUE UNINTERRUPTED AROUND ALL CORNERS AND WALL INTERSECTIONS. WHERE STRUCTURAL STEEL COLUMNS OR BEAMS INTERRUPT THE CONTINUITY OF A BOND BEAM, DOWELS MATCHING BOND BEAM REINFORCEMENT SHALL BE WELDED TO THE STRUCTURAL STEEL TO PROVIDE CONTINUITY.

6 ALL VERTICAL REINFORCING BARS SHALL BE DOWELED TO STRUCTURE BELOW WITH BARS OF SAME SIZE AND SPACING. LAP ALL SPLICES IN MASONRY PER REBAR SHEDULE. PLACE ALL BARS SECURELY PRIOR TO GROUTING.

7 MASONRY REINFORCEMENT: UNLESS NOTED OTHERWISE ON THE PLANS OR SCHEDULE THE MINIMUM REINFORCEMENT FOR ALL MASONRY WALLS SHALL BE AS FOLLOWS:

8 IN. WALLS: #5 @ 32 IN. O.C. IN VERTICAL GROUTED CELLS
& 2–#4 @ 48 IN. O.C. IN BLOCK UNIT
HORIZONTALLY GROUTED.

8 ALL HORIZONTAL REINFORCING SHALL TERMINATE WITH A HOOK AROUND VERTICAL REINFORCING.

9 CONCRETE MASONRY UNITS SHALL BE GRADE N UNITS CONFORMING TO A.S.T.M. DESIGNATION C90 AND SHALL HAVE A MINIMUM ULTIMATE COMPRESSIVE STRENGTH OF 1900 PSI ON THE NET SECTION.

10 MORTAR SHALL BE TYPE "S" AND SHALL HAVE THE FOLLOWING PROPORTIONS BY VOLUMES:

PORTLAND CEMENT . . . . . 1 PART
HYDRATED LIME . . . . . 1/4 – 1/2 PART
DAMP. LOOSE AGGREGATE. . . NOT LESS THAN 2–1/4 & NOT MORE THAN (3) TIMES THE SUM OF CEMENT AND LIME USED.

11 STOP GROUT POURS 1/2" BELOW TOP OF BLOCK UNITS.

12 ALL ANCHOR BOLTS MUST BE PLACED IN GROUTED CELLS.

13 NO MASONRY SHALL BE LAID WHEN THE TEMPERATURE OF THE OUTSIDE AIR IS BELOW 40 DEG. F., UNLESS APPROVED METHODS ARE USED DURING CONSTRUCTION TO PREVENT DAMAGE TO THE MASONRY. SUCH METHODS SHALL INCLUDE PROTECTION OF THE MASONRY FOR A PERIOD OF AT LEAST 48 HOURS.

14 ALL REINFORCING SHALL BE IN PLACE PRIOR TO GROUTING. VERTICAL REINFORCING BARS SHALL BE HELD IN POSITION AT THE TOP, BOTTOM AND AT INTERVALS NOT FARTHER APART THAN 200 BAR DIAMETERS. PROVIDE WIRE TIES AT ALL LAP SPLICES.

15 ALL MASONRY WALLS SHALL HAVE VERTICAL CONTROL JOINTS AT: MAJOR CHANGES IN WALL HEIGHT, AT CHANGES IN WALL THICKNESS, AT BUILDING CONSTRUCTION JOINTS, AND NOT FARTHER APART THAN 25 FEET ELSEWHERE. CONSULT ARCHITECTURAL DRAWINGS CONSULT ARCHITECTURAL DRAWINGS FOR LOCATIONS. VERTICAL CELLS EACH SIDE OF CONTROL JOINTS SHALL BE GROUTED AND REINFORCED WITH REBARS TO MATCH VERTICAL REINFORCEMENT USED THROUGHOUT THAT WALL. ONLY HORIZONTAL REBARS IN BOND BEAMS AT FLOORS AND AT ROOF LEVEL SHALL CONTINUE THROUGH CONTROL JOINTS. PROVIDE FULL HEIGHT HARD RUBBER KEY AT JOINT. WHERE JOINT LOCATIONS ARE NOT SHOWN ON THE DRAWINGS THE CONTRACTOR SHALL SUBMIT PROPOSED LOCATIONS TO ARCHITECT/ENGINEER FOR REVIEW.

REINFORCING STEEL

1 ALL REINFORCEMENT SHALL BE DETAILED AND PLACED IN ACCORDANCE WITH ACI DETAILING MANUAL 315–92 AND ACI STANDARD 318–99.

2 REINFORCING STEEL SHALL BE ASTM A615 GRADE 60.

3 WELDED WIRE FABRIC SHALL CONFORM TO ASTM A185. LAP ONE MESH TIE.

4 ALL REINFORCEMENT SHALL BE SECURELY TIED AND HELD IN PLACE.

5 REINFORCING BARS THAT ARE TO BE WELDED, INCLUDING DEFORMED BAR ANCHORS (D.B.A.) SHALL COMPLY WITH ASTM A706 OR ANOTHER WELDABLE GRADE AND SHALL BE WELDED IN ACCORDANCE WITH THE A.W.S. RECOMMENDATIONS.

6 ALL CONTINUOUS REINFORCEMENT SHALL TERMINATE WITH A 90 DEG. TURN OR A SEPARATE CORNER BAR. ALL SPLICE SHALL HAVE A MINIMUM LAP OR EMBEDMENT PER REINFORCING SCHEDULE.

7 WHERE THE LENGTH OF A BAR IS GIVEN AND IT IS TO BE HOOKED, THE HOOK SHALL BE IN ADDITION TO THE LENGTH GIVEN, UNLESS SHOWN OTHERWISE.

8 COVER TO MAIN REINFORCEMENT FROM ADJACENT SURFACES SHALL BE AS FOLLOWS UNLESS SHOWN OTHERWISE:
A. UNFORMED SURFACES IN CONTACT WITH GROUND OR EXPOSED TO THE WEATHER (BOTTOM OF FOOTINGS). . . . . 3 INCHES
B. SLABS ON GRADE . . . . . 2 INCHES
C. FORMED SURFACES IN CONTACT WITH THE GROUND OR EXPOSED TO THE WEATHER (GRADE BMS, WALLS, ETC.), BEAMS AND COLUMNS. . . . . 2 INCHES
D. STRUCTURAL SLABS AND JOISTS NOT EXPOSED TO WEATHER OR EARTH..... . . 1 INCH
E. INTERIOR WALL SURFACES. . . . . 1 INCH
F. INTERIOR BEAMS AND COLUMNS . . . . . 1–1/2 IN.
G. IN ALL CASES MINIMUM COVER SHALL NOT BE LESS THAN THE DIAMETER OF ADJACENT BARS.

9 PRIOR TO FABRICATION AND PLACEMENT, SHOP DRAWINGS FOR ALL REINFORCING STEEL SHALL BE REVIEWED BY THE STRUCTURAL ENGINEER.

STRUCTURAL STEEL

1 ALL STRUCTURAL STEEL AND STRUCTURAL STEEL WORK SHALL COMPLY WITH BOTH THE AISC "MANUAL OF STEEL CONSTRUCTION" CONTAINING THE SPECIFICATIONS FOR THE DESIGN, FABRICATION AND ERECTION OF STRUCTURAL STEEL BUILDINGS, INCLUDING THE "CODE OF STANDARD PRACTICES" (LATEST EDITION), AND WITH THE IBC 2000 EDITION.

2 ALL WIDE FLANGE STRUCTURAL STEEL SHALL BE ASTM A992 AND ALL MISCELLANEOUS SHAPES SHALL BE ASTM A36, UNO.

3 STRUCTURAL STEEL TUBING SHALL CONFORM TO ASTM A500 GRADE B; YIELD STRESS = 46 4

5 STRUCTURAL STEEL PIPE COLUMNS SHALL CONFORM TO ASTM A501, GRADE B; YIELD STRESS = 35 KSI.

6 USE A325 BOLTS FOR STEEL TO STEEL CONNECTIONS AND A307 BOLTS FOR ALL OTHER CONNECTIONS. USE 3/4" DIAMETER MINIMUM.

7 PRIOR TO FABRICATION AND ERECTION, SHOP DRAWINGS FOR ALL STEEL ITEMS SHALL BE REVIEWED BY THE STRUCTURAL ENGINEER. THE CONTRACTOR SHALL VERIFY ALL SHOP DRAWING DIMENSIONS WITH STRUCTURAL AND ARCHITECTURAL PLANS AND DETAILS.

8 ALL WELDS SHALL BE MADE WITH E70XX ELECTRODES AND BY WELDERS CERTIFIED BY AWS STANDARDS WITHIN THE PAST 12 MONTHS; PROVIDE WRITTEN CERTIFICATION IF REQUESTED.

9 ALL HIGH–STRENGTH BOLTS SHALL BE TIGHTENED TO THE APPROPRIATE MINIMUM BOLT TENSION IN ACCORDANCE WITH "AISC SPECIFICATIONS FOR STRUCTURAL JOINTS USING ASTM A325 OR A490 BOLTS." THE PREFERRED METHOD OF TIGHTENING IS BY USE OF A "DIRECT TENSION INDICATOR." THE TURN–OF–NUT METHOD MAY ALSO BE USED. PROVIDE CARBONIZED WASHERS UNDER THE TURNED ELEMENT.

10 ALL STEEL JOISTS, JOIST GIRDERS, AND ASSOCIATED WORK SHALL COMPLY WITH THE LATEST EDITION OF THE "STANDARD SPECIFICATIONS OF THE STEEL JOIST INSTITUTE." UNLESS SHOWN OTHERWISE, PROVIDE BRIDGING IN ACCORDANCE WITH THIS SPECIFICATION AS A MINIMUM. JOIST FABRICATOR SHALL BE A MEMBER OF THE STEEL JOIST INSTITUTE (SJI). JOISTS SHALL BE DESIGNED BY A PROFESSIONAL ENGINEER, REGISTERED IN THE STATE OF THE PROJECT AND HE SHALL SEAL AND SIGN ALL DESIGN CALCULATIONS AND JOISTS SHOP DRAWINGS. DESIGN SHALL COMPLY WITH ALL LOADING REQUIREMENTS INDICATED ON THE DRAWINGS AND NOTES. DESIGN CALCULATIONS AND SHOP DRAWINGS SHALL CLEARLY INDICATE ALL LOADINGS, DIMENSIONS, MEMBER FORCES, REACTIONS, MEMBER SIZES, WELD REQUIREMENTS AND JOINT DETAILS. JOISTS SHALL BE DESIGNED ASSUMING HORIZONTAL MOVEMENT IS ALLOWED AT ONE END, UNLESS NOTED OTHERWISE.

11 ALL BRIDGING SHALL BE SECURELY ANCHORED AT END OF EACH RUN. WELD TO STEEL BEAM OR ANCHOR TO MASONRY WALL WITH 3/8" ANCHOR BOLTS.

12 WHERE JOISTS CAN NOT BEAR 2–1/2 INCHES ON STEEL BEAMS, STAGGER LOCATION OF JOISTS TO PROVIDE 2–1/2 INCHES MINIMUM BEARING ON BEAM.

13 MINIMUM THICKNESS OF JOIST TOP CHORD ANGLE IS 5/32".

14 CONCENTRATED LOADS SHALL NOT BE PLACED ON NOR HUNG FROM JOISTS UNLESS THEY ARE PLACED AT PANEL POINTS OR A BRACE (L1–1/2x1–1/2X1/8) IS INSTALLED BETWEEN THE LOAD AND PANEL POINT. CONCENTRATED LOADS NOT SHOWN ON THE DRAWINGS SHALL BE BROUGHT TO THE ATTENTION OF THE ARCHITECT/ENGINEER FOR REVIEW.

15 MECHANICAL ROOF TOP UNITS SHALL BE PLACED OVER ADDITIONAL OR SPECIAL JOISTS AS SHOWN ON DRAWINGS. THE WEIGHT, SIZE AND LOCATION OF ALL PROPOSED UNITS AND CURBS SHALL BE SUBMITTED TO THE ARCHITECT/ENGINEER FOR VERIFICATION BEFORE FABRICATION OF STEEL.

16 FRAMES FOR ROOF OPENINGS AND SUPPORTS FOR ROOF MOUNTED MECHANICAL EQUIPMENT ARE INDICATED ON DRAWINGS FOR BID PURPOSES ONLY. UPON RECEIPT OF MECHANICAL SUBMITTALS, THE CONTRACTOR SHALL FURNISH STEEL SUPPLIER SUPPLEMENTARY DRAWINGS OR OTHER INFORMATION NECESSARY TO LAYOUT AND DETAIL THIS PORTION OF THE WORK. OTHER STEEL WORK SHALL NOT BE DELAYED BY THIS PORTION OF THE WORK. SHOP DRAWINGS SHALL BE SUBMITTED TO ENGINEER FOR REVIEW.

METAL ROOF DECK

1 STEEL ROOF DECK SHALL COMPLY WITH THE LATEST REQUIREMENTS OF THE STEEL DECK INSTITUTE, SDI. SUBMIT ICBO REPORT WITH SHOP DRAWINGS.

2 STEEL ROOF DECK SHALL BE 1.5" DEEP X 20 GAUGE GALVANIZED (CT60) TYPE "B" WIDE RIB DECK WITH INTERLOCKING SIDE SEAMS. THE FOLLOWING MINIMUM PROPERTIES MUST BE SATISFIED:
Fy = 33 KSI
I = .210 IN 4/FT.
Sp = .232 IN 3/FT.
Sn = .245 IN 3/FT.

3 WELD STEEL ROOF DECK TO SUPPORTING FRAMING MEMBERS WITH 3/4" DIAMETER PUDDLE WELDS AT THE FOLLOWING SPACINGS:
(4) WELDS PER 36–INCH SHEET TO ALL SUPPORTS PERPENDICULAR TO DECK CORRUGATIONS.
12" O.C. TO ALL SUPPORTS PARALLEL TO DECK CORRUGATIONS.
12" O.C. OVER ALL DRAG STRUTS, SHEAR WALLS, BRACED FRAMES AND ROOF PERIMETER.

4 ATTACH INTERLOCKING SEAMS WITH 1.5" LONG TOP SEAM WELDS AT 18" O.C. MAXIMUM BETWEEN ADJACENT PIECES OF DECKING. CRIMP SIDE SEAMS BEFORE WELDING.

5 PROVIDE A 2" MINIMUM BEARING AND A 2–INCH LAP AT THE SPLICE POINTS OF ALL PIECES OF DECK.

6 WHERE POSSIBLE, ALL DECK SHALL BE 3–SPAN CONTINUOUS MINIMUM. IN AREAS WHERE 3–SPAN CONDITIONS ARE NOT POSSIBLE, THE DECK SHALL MEET THE LOADING CRITERIA FOR THE SPAN CONDITION. THE CONTRACTOR SHALL PROVIDE HEAVIER GAUGE DECK AS REQUIRED FOR ONE OR TWO SPAN CONDITIONS.

QUALITY ASSURANCE PLAN

1 SPECIAL INSPECTION SHALL BE PROVIDED BY THE OWNER ACCORDING TO IBC CHAPTER 17 FOR THE ITEMS IDENTIFIED IN THIS SECTION AND ON THE CONTRACT DOCUMENTS.

2 THE NAMES AND CREDENTIALS OF SPECIAL INSPECTORS TO BE USED SHALL BE SUBMITTED TO THE BUILDING DEPARTMENT WHEN APPLYING FOR A BUILDING PERMIT.

3 SPECIAL INSPECTION REPORTS SHALL BE DELIVERED TO THE ENGINEER OF RECORD, ARCHITECT, AND OWNER (AS REQUESTED) BI–WEEKLY OR MORE FREQUENTLY AS REQUIRED BY THE INSPECTOR OR BUILDING OFFICIAL.

4 OFF–SITE FABRICATION: WHERE FABRICATION OF STRUCTURAL LOAD–BEARING MEMBERS AND ASSEMBLIES IS BEING PERFORMED ON THE PREMISES OF A FABRICATORS SHOP, SPECIAL INSPECTION OF THE FABRICATED ITEMS SHALL BE IN ACCORDANCE WITH IBC SECTION 1704.2 UNLESS THE FABRICATOR IS APPROVED ACCORDING TO IBC SECTION 1704.2.2.

5 STEEL CONSTRUCTION: SPECIAL INSPECTIONS FOR STEEL ELEMENTS SHALL BE PROVIDED IN ACCORDANCE WITH SECTIONS 1704.3 AND TABLE 1704.2.

6 WELDING: WELDING INSPECTION SHALL BE PROVIDED IN ACCORDANCE WITH TABLE 1704.3. ELEMENTS THAT ARE PART OF THE SEISMIC–FORCE–RESISTING SYSTEM SHALL ALSO BE INSPECTED ACCORDING TO SECTION 1707.2 AND 1708.4.

7 HIGH–STRENGTH BOLTS: PERIODIC SPECIAL INSPECTION SHALL BE PROVIDED FOR INSTALLATION OF HIGH–STRENGTH BOLTS IN ACCORDANCE WITH AISC SPECIFICATIONS. SEE IBC SECTION 1704.3.3.

8 CONCRETE CONSTRUCTION: SPECIAL INSPECTIONS AND VERIFICATIONS SHALL BE PROVIDED IN ACCORDANCE WITH TABLE 1704.4.

QUALITY ASSURANCE PLAN (CON'TD)

9 MASONRY CONSTRUCTION: LEVEL 1 SPECIAL INSPECTION SHALL BE PROVIDED FOR MASONRY CONSTRUCTION IN ACCORDANCE WITH SECTION 1704.5.2 AND TABLE 1704.5.1. TESTING SHALL COMPLY WITH SECTION 1708.1.3

10 COLD–FORMED STEEL FRAMING: CONNECTIONS OF ELEMENTS IN THE SEISMIC–FORCE–RESISTING SYSTEM IN ACCORDANCE WITH SECTION 1707.4.

11 SOILS: SPECIAL INSPECTION SHALL BE PROVIDED FOR PLACEMENT OF FILL 12 INCHES OR MORE DEEP IN ACCORDANCE WITH SECTION 1704.7.

12 EPOXY ANCHORS: PRIOR TO AND DURING EPOXY INJECTION TO INSURE PROPER INSTALLATION AS PER MANUFACTURERS REQUIREMENTS. CONTRACTOR SHALL SUBMIT PROPOSED EPOXY MANUFACTURERS I.C.B.O. REPORT TO STRUCTURAL ENGINEER PRIOR TO INSTALLATION.

13 NO INSPECTION OF BOLTS INSTALLED IN CONCRETE IS REQUIRED SINCE THE STRESS INCREASES PERMITTED BY SECTION 1912.5 ARE NOT UTILIZED.

QUALITY ASSURANCE - CONTRACTOR RESPONSIBILITY

EACH CONTRACTOR RESPONSIBLE FOR THE CONSTRUCTION OF A SEISMIC–FORCE–RESISTING SYSTEM, DESIGNATED SEISMIC SYSTEM, OR COMPONENT LISTED IN THE QUALITY ASSURANCE PLAN SHALL SUBMIT A WRITTEN CONTRACTOR'S STATEMENT OF RESPONSIBILITY TO THE BUILDING OFFICIAL AND TO THE OWNER PRIOR TO THE COMMENCEMENT OF WORK ON THE SYSTEM OR COMPONENT. THE CONTRACTOR'S STATEMENT OF RESPONSIBILITY SHALL CONTAIN THE FOLLOWING:

A. ACKNOWLEDGMENT OF AWARENESS OF THE SPECIAL REQUIREMENTS CONTAINED IN THE QUALITY ASSURANCE PLAN.

B. ACKNOWLEDGMENT THAT CONTROL WILL BE EXERCISED TO OBTAIN CONFORMANCE WITH THE CONSTRUCTION DOCUMENTS APPROVED BY THE BUILDING OFFICIAL.

C. PROCEDURES FOR EXERCISING CONTROL WITHIN THE CONTRACTOR'S ORGANIZATION, THE METHOD AND FREQUENCY OF REPORTING, AND THE DISTRIBUTION OF REPORTS.

D. IDENTIFICATION AND QUALIFICATIONS OF THE PERSON(S) EXERCISING SUCH CONTROL AND THE POSITION(S) IN THE ORGANIZATION.

NEW HARRISVILLE LIQUOR STORE
DEPARTMENT OF ALCHOLIC BEVERAGE CONTROL
1455 S WALL AVENUE, HARIISVILLE, UTAH

FRANK N MURDOCK JR ■ Architect & Associates
975 East 100 South Suite 100, Salt Lake City, Utah 84102 TEL: (801) 532–4441 FAX: (801) 532–4220

STRUCTURAL GENERAL NOTES

REVISION # DATE:
△ –

DFCM PROJECT NO.:
04242030
CONSTRUCTION DOCS
FILE NAME: S–001.dwg
PLOT SCALE: AS NOTED
DRAWN BY: DJK
CHECKED BY: KC
DATE: JANUARY, 2006

S
001

X:\Project Files\Boxx Harrisville Liquor Store\Drawings\S-001.dwg, 30x42, 12/23/2006 3:49:48 PM

FOOTING SCHEDULE

MARK	WIDTH	LENGTH	THICK	CROSSWISE REINF. NO.	CROSSWISE REINF. SIZE	CROSSWISE REINF. LENGTH	CROSSWISE REINF. SPA.	LENGTHWISE REINF. NO.	LENGTHWISE REINF. SIZE	LENGTHWISE REINF. LENGTH	LENGTHWISE REINF. SPA.	NOTES
FC2.0	2'-0"	CONT.	12"	--	--	--	--	(2)	#5	CONT.	EQ.	--
FC2.0*	2'-0"	CONT.	12"	--	--	--	--	(2)	#5	CONT.	EQ.	* THICKENED SLAB
FC3.0	3'-0"	CONT.	12"	--	#4	2'-6"	18"	(3)	#5	CONT.	EQ.	--
FC4.0	4'-0"	CONT.	SEE DETAIL 13/S301									
FC5.5	5'-6"	CONT.	SEE DETAIL 13/S301									
FS4.0	4'-0"	4'-0"	12"	(4)	#4	3'-6"	EQ.	(4)	#4	3'-6"	EQ.	--
FS7.5	7'-6"	7'-6"	12"	(8)	#5	7'-0"	EQ.	(8)	#5	7'-0"	EQ.	--

BASE PLATE SCHEDULE

MARK	DETAIL	PLATE DIMENSIONS t	PLATE DIMENSIONS a	PLATE DIMENSIONS b	PLATE DIMENSIONS c	ANCHOR BOLTS DIA.	ANCHOR BOLTS e	ANCHOR BOLTS TYPE
BP-1	1	3/4"	12"	12"	--	3/4"	9"	--
BP-2	2	3/4"	8"	12"	1/2"	3/4"	9"	--

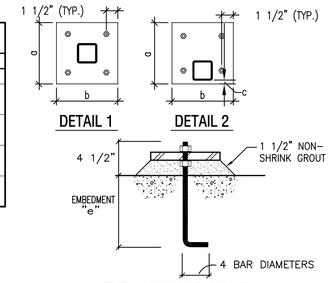

TYP. ANCHOR BOLT

NOTES:

1. ALL PLATES ARE A36 STEEL. ALL BOLTS ARE A307.
2. NON-SHRINK GROUT SHALL HAVE A MINIMUM ULTIMATE COMPRESSIVE STRENGTH OF 4,000 PSI.
3. ALL BOLTS SHALL BE THREADED FOR FULL HEIGHT ABOVE TOP OF CONCRETE AND HAVE DOUBLE NUTS WITH WASHERS.
4. CENTER ALL COLUMNS ON PLATES, UNO.
5. ALL COLUMNS SHALL BE WELDED TO BASE PLATES WITH FILLET WELDS, UNO. ALL FILLET WELDS SHALL BE AS PER AISC TABLE J2.4, 3/16" MINIMUM.
6. ALL ANCHOR BOLTS ARE 3/4" DIA., TYPE 1, UNO.
7. COLUMN SHAPES SHOWN ON DETAILS MAY NOT CORRESPOND WITH ACTUAL COLUMN SHAPE. REFER TO STRUCTURAL PLANS FOR COLUMN TYPE.

PLAN NOTES (FTG & FDTN):

(1) CIRCLED NOTES ARE KEYED TO PLAN

1. SEE SHEET S001 FOR STRUCTURAL NOTES.
2. SEE ARCH DWGS FOR ADDITIONAL DIMENSIONS NOT SHOWN.
3. FOR CAST IN PLACE FLOOR DRAINS AND PIPING, ELECTRICAL CONDUIT, GROUNDING, PIPE SLEEVES, BLOCKOUTS THROUGH WALLS, CURBS OR FOUNDATIONS, SEE APPROPRIATE DISCIPLINE DRAWINGS.
4. **TYPICAL SLABS ON GRADE, UNO:** ALL SLABS ON GRADE SHALL BE 4", UNO, PLACED OVER 4" MINIMUM DEPTH FREE-DRAINING GRAVEL FILL. REINFORCE CONCRETE SLAB WITH 6x6-W1.4xW1.4 WWF (USE FLAT SHEETS). SEE DETAILS 1 & 2/S301. FSE = 100'-0", UNO.
5. CENTER ALL FOOTINGS ON WALLS OR COLUMNS ABOVE, TYPICAL, UNO.

(6) RECESSED SLAB, COORD W/ ARCH DWGS. MAINTAIN 4" MIN SLAB THICKNESS.

(7) EXTEND STEEL PLATE TO BRACE GUARD RAIL WALL, SEE DETAIL 21/S302.

(8) DROP THICKENED SLAB TO TOP OF FOOTING BELOW.

9. SCHEDULE MARK ABREVIATIONS:

BP-# DENOTES BASE PLATE, SEE BASE PLATE SCHEDULE, THIS SHEET.
FC# DENOTES CONTINUOUS FOOTING,
FS# DENOTES SQUARE SPREAD FOOTING, SEE FOOTING SCHEDULE THIS SHEET.
MW-# DENOTES MASONRY WALL, SEE MASONRY WALL SCHEDULE ON SHEET S201.

LEGEND:

- SLAB CONTROL / CONSTRUCTION JOINT, SEE DETAILS 01/S301 & 02/S301
- FOOTING STEP, SEE DETAIL 04/S301
- SLAB BLOCK-OUT AT COLUMN
- xx'-xx" TOP OF FOOTING ELEVATION
- xxx'-xx" TOP OF WALL ELEVATION
- xx'-xx" TOP OF PIER ELEVATION
- xxx'-xx" TOP OF SLAB ELEVATION
- CHANGE IN ELEVATION RECESSED/DEPRESSED SLAB
- STEEL COLUMN - HSS
- CONCRETE SLAB
- CONCRETE FOUNDATION WALL
- RECESS IN CONCRETE FOUNDATION WALL

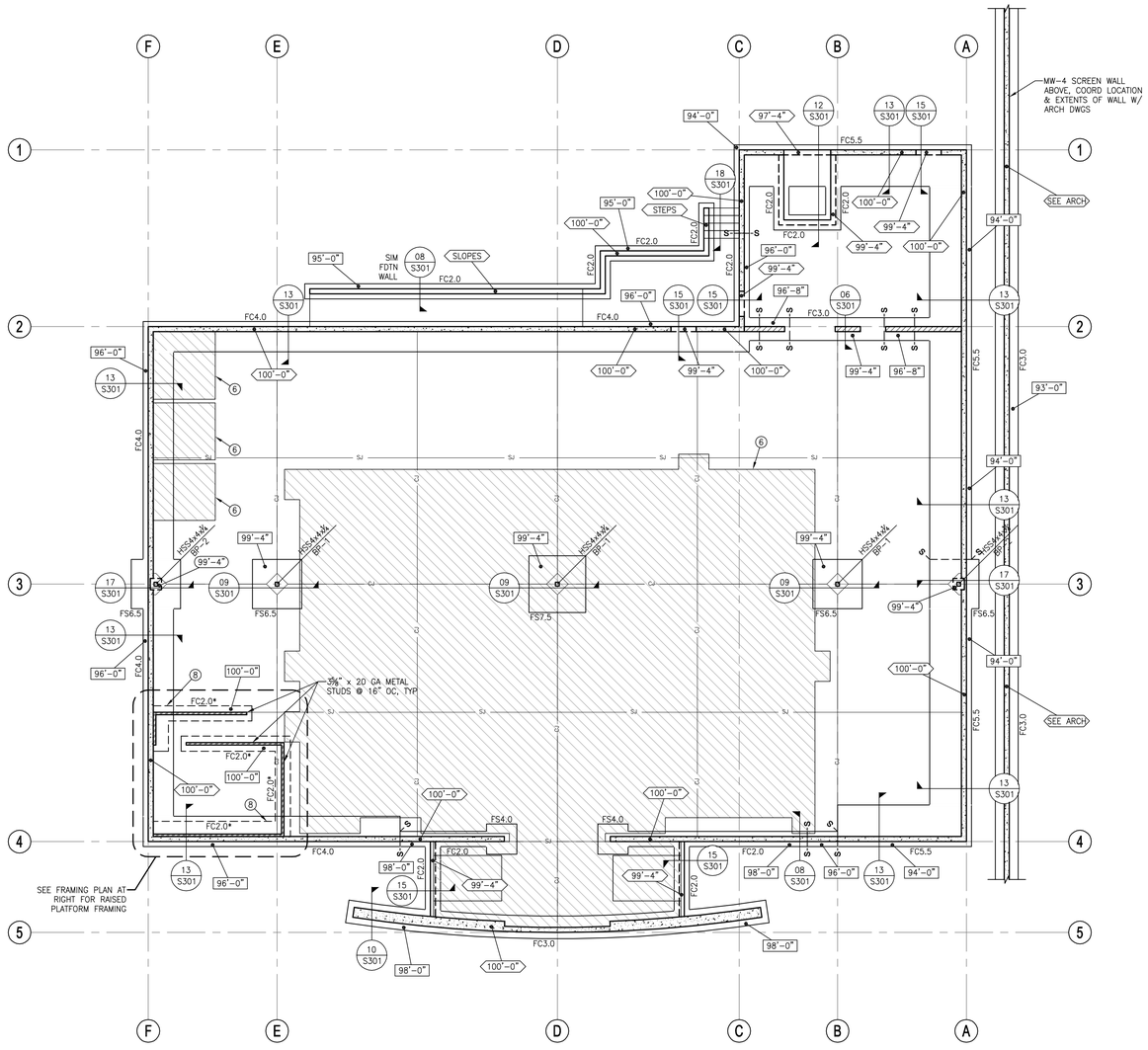

FOOTING & FOUNDATION PLAN
SCALE: 1/8" = 1'-0"

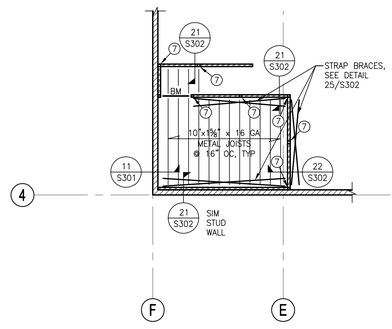

RAISED PLATFORM FRAMING PLAN
SCALE: 1/8" = 1'-0"

NEW HARRISVILLE LIQUOR STORE
DEPARTMENT OF ALCHOLIC BEVERAGE CONTROL
1455 S WALL AVENUE, HARIISVILLE, UTAH

FOOTING & FOUNDATION PLAN

FRANK N MURDOCK JR Architect & Associates
975 East 100 South Suite 100, Salt Lake City, Utah 84102 TEL: (801) 532-4441 FAX (801) 532-4220

REVISION # DATE:
△ -

DFCM PROJECT NO.:
04242030
CONSTRUCTION DOCS
FILE NAME: S-101.dwg
PLOT SCALE: AS NOTED
DRAWN BY: DJK
CHECKED BY: KC
DATE: JANUARY, 2006

S
101

X:\Project Files\06xxx Harrisville Liquor Store\Drawings\S-101.dwg, 30x42, 1/23/2006 3:50:27 PM

MASONRY WALL SCHEDULE

MARK	THICK	VERTICAL REINF. NO.	VERTICAL REINF. SIZE	VERTICAL REINF. SPA.	HORIZONTAL REINF. NO.	HORIZONTAL REINF. SIZE	HORIZONTAL REINF. SPA.	GROUT	NOTES
MW–1	8"	(1)	#5	32"	(2)	#4	48	ALL REINF. CELLS	--
MW–2	8"	(1)	#6	16"	(2)	#4	48	SOLID	--
MW–3	16"	(1)	#5	16"	(2)	#4	48	SOLID	EACH WYTHE. SEE NOTE 1.
MW–4	8"	(1)	#5	24"	(2)	#4	48	ALL REINF. CELLS	--

NOTES:

1. IN MW–3 PROVIDE 16" 9 GAGE DURAWALL JOINT REINF AT 16" OC.

MASONRY BEAM SCHEDULE

MARK	WIDTH	DEPTH	REINFORCEMENT HORIZONTAL	REINFORCEMENT VERTICAL	NOTES
MB–1	8"	16"	(2) #4 @ BOTTOM	SEE WALL REINF	--
MB–2	8"	24"	(2) #5 @ BOTTOM	SEE WALL REINF	--
MB–3	8"	56"	(2) #6 @ BOTTOM	#4 @ 24" OC	HOOK VERTS SEE DETAIL BELOW
			(2) #4 @ TOP	--	
MB–4	16"	24"	(4) #5 @ BOTTOM	SEE WALL REINF	
MB–5	16"	32"	(4) #5 @ BOTTOM	SEE WALL REINF	

NOTES:

1. VERTICAL WALL REINFORCEMENT (SIZE & SPACING) SHALL BE USED, UNO. VERTICAL REINFORCEMENT ENDS WITH STD ACI 180° HOOK AND 48 BAR DIAMETERS LAP ABOVE BEAM
2. GROUT BEAMS SOLID FOR DEPTH SHOWN ABOVE, PLUS AS PER WALL SCHEDULE.
3. TOP BARS SHALL EXTEND THE GREATER OF 24" OR 48 BAR DIAMETERS BEYOND FACE OF SUPPORTS AND BE SPLICED WHEN NECESSARY AT MID SPAN. BOTTOM BARS SHALL EXTEND 24" INTO SUPPORTS AND BE SPLICED OVER SUPPORTS WHERE NECESSARY. WHERE THE EXTENSIONS NOTED CANNOT BE PROVIDED HOOK BARS INTO SUPPORTS.
4. GROUT SIDES OF OPENING SOLID 1" PER FT OF OPENING WIDTH, MIN. ONE 8" CELL FOR UP TO 8'–0" SPAN, (2) CELLS FOR UP TO 16'–0" SPAN, ETC, UNO.
5. SEE PLAN & SCHEDULE FOR SPECIAL MASONRY COLS. PROVIDE ONE VERTICAL BAR IN EACH GROUTED CELL AT MECHANICAL OPENINGS IN WALLS USE MASONRY BEAMS OF SIMILAR SIZE AND REINFORCING AS SHOWN IN THOSE WALLS FOR EQUIVALENT WIDTH OPENINGS. NO MECH OPENINGS SHALL BE PLACED BELOW BEAM BEARING
6. AT WALL NOT SHOWN ON STRUCTURAL DRAWINGS, FOR OPENINGS TO 5'–0" CLEAR, USE 24" DEEP SOLID GROUTED MASONRY BEAM WITH (2) #5 BOTTOM; FOR OPENINGS TO 8'–0" CLEAR, USE 32" DEEP SOLID GROUTED MASONRY BEAM WITH (2) #6 BOTTOM.
7. NO DUCTS, OPENINGS, OR PENETRATIONS SHALL OCCUR THROUGH BEAMS, UNO, ON STRUCTURAL DRAWINGS.

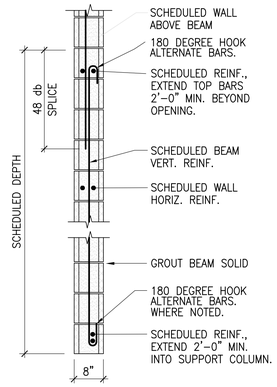

LINTEL DETAIL

NO SCALE

PLAN NOTES (ROOF FRAMING):

(1) CIRCLED NOTES ARE KEYED TO PLAN

1. ALL MASONRY WALLS SHALL BE MW–1, UNO, SEE MASONRY WALL SCHEDULE THIS SHEET.
2. SEE DETAIL 07/S301 FOR TYPICAL MASONRY CONTROL JOINT CRITERIA. COORDINATE LOCATIONS OF MASONRY CONTROL JOINTS W/ ARCH DWGS.
3. SEE DETAIL 11/S302 FOR ROOF JOIST SUPPORTED PIPING.

(4). SEE DETAILS 12/S302 & 14/S302 FOR ROOFTOP MECHANICAL UNIT SUPPORTS AND ROOF OPENINGS, TYP. COORDINATE LOCATIONS OF OPENINGS AND WEIGHTS OF MECHANICAL EQUIPMENT WITH ARCHITECTURAL, MECHANICAL DRAWINGS, AND MECHANICAL CONTRACTOR.

(5). IN ADDITION TO DESIGNING JOIST FOR FULL CAPACITY SHOWN IN SJI MANUAL, JOIST MANUFACTURER SHALL DESIGN JOIST FOR ADDED CONCENTRATED LOADS INDICATED ON PLAN (#K)

6. SEE ARCH DWGS FOR DECK BEARING ELEVATIONS.
7. SCHEDULE MARK ABREVIATIONS:

MB–# DENOTES MASONRY BEAM, SEE MASONRY BEAM SCHEDULE THIS SHEET.

MW–# DENOTES MASONRY WALL, SEE MASONRY WALL SCHEDULE THIS SHEET.

(8). JOIST TOP CHORD ANGLE THICKNESS MUST BE 5/32", MINIMUM.

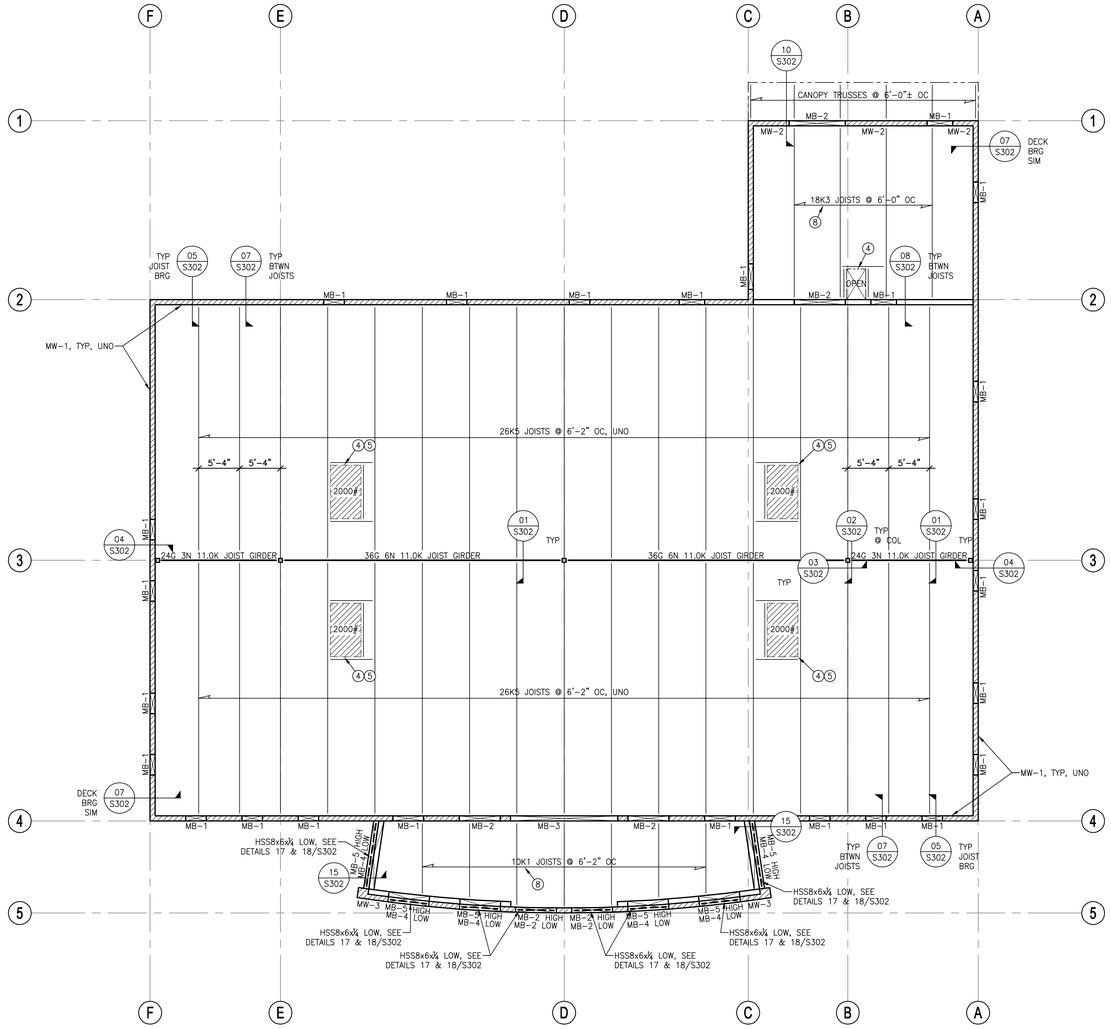

LEGEND:

- CHANGE IN ELEVATION
- STEEL COLUMN – HSS
- STEEL BEAM, GIRDER
- STEEL JOIST
- METAL ROOF DECK, W/ DECK SPAN DIRECTION INDICATED
- OPEN — OPENING IN DECK
- MASONRY WALL EXTENDING ABOVE ROOF DECK
- MB–# — MASONRY BEAM, SEE SCHEDULE THIS SHEET
- MASONRY WALL EXTENDING TO ROOF DECK
- MASONRY WALL STOPPING BELOW ROOF DECK

ROOF FRAMING PLAN

SCALE: 1/8" = 1'–0"

NEW HARRISVILLE LIQUOR STORE

DEPARTMENT OF ALCHOLIC BEVERAGE CONTROL
1455 S WALL AVENUE, HARIISVILLE, UTAH

FRANK N MURDOCK JR Architect & Associates
975 East 100 South Suite 100, Salt Lake City, Utah 84102 TEL: (801) 532–4441 FAX (801) 532–4220

ROOF FRAMING PLAN

REVISION # DATE:
△ –

DFCM PROJECT NO.:
04242030
CONSTRUCTION DOCS
FILE NAME: S–102.dwg
PLOT SCALE: AS NOTED
DRAWN BY: DJK
CHECKED BY: KC
DATE: JANUARY, 2006

S
102

X:\Project Files\06xxx Harrisville Liquor Store\Drawings\S-102.dwg, 30x42, 1/23/2006 3:50:47 PM

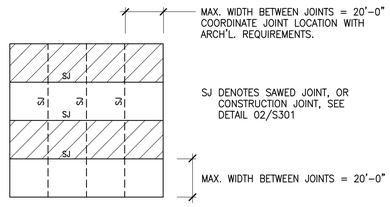

SLAB CONTROL JOINT CRITERIA

DETAIL 01

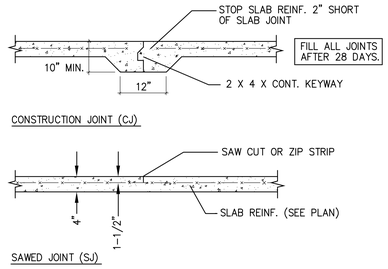

TYPICAL SLAB JOINT DETAILS

DETAIL 02

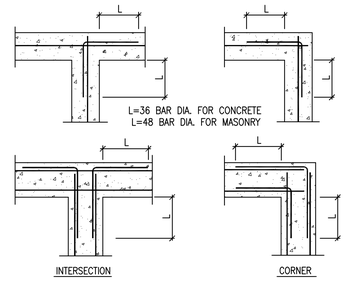

WALL INTERSECTION DOWELS

DETAIL 03

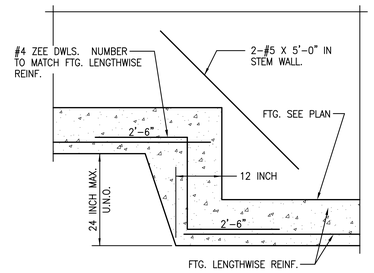

TYPICAL FOOTING STEP

DETAIL 04

DETAIL 05

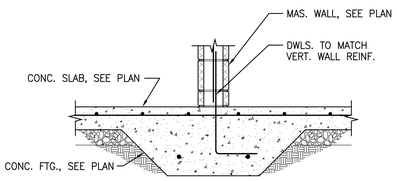

DETAIL 06

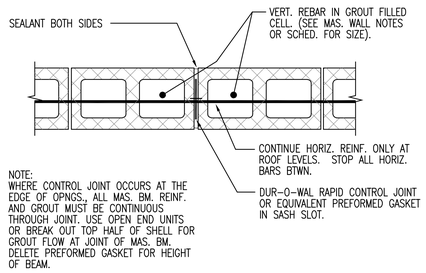

TYPICAL MASONRY CONTROL JOINT

DETAIL 07

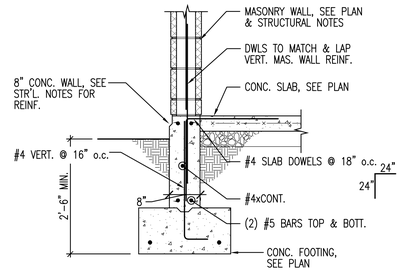

DETAIL 08

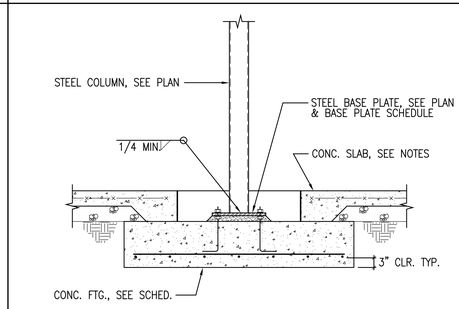

DETAIL 09

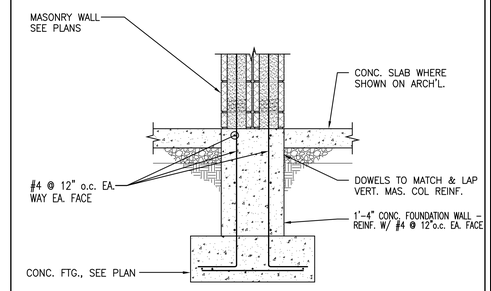

DETAIL 10

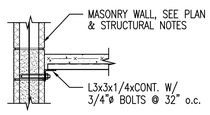

DETAIL 11

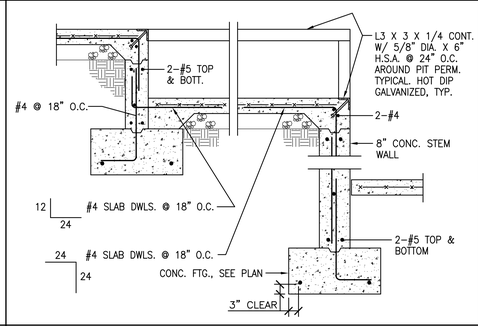

DETAIL 12

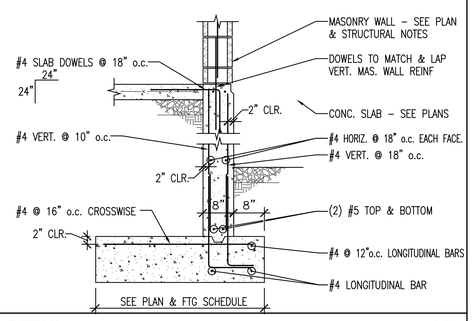

DETAIL 13

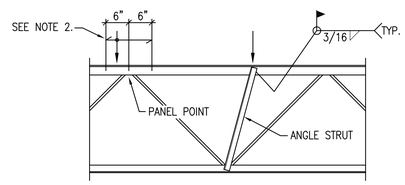

CONCENTRATED LOADS ON TOP CHORD OF JOISTS

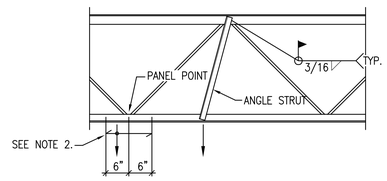

CONCENTRATED LOADS ON BOTTOM CHORD OF JOISTS

NOTES:

1) PROVIDE ANGLE STRUTS BETWEEN CONCENTRATED LOAD AND PANEL POINT ON OPPOSITE CHORD WHERE CONCENTRATED LOADS EXCEED 150#. ANGLE STRUT SHALL BE AS FOLLOWS:

DEPTH OF JOIST	ANGLE SIZE
UP TO 30"	L1 1/2 X 1 1/2 X 1/4
30" TO 48"	L2 X 2 X 1/4
48" TO 60"	L2 1/2 X 2 1/2 X 1/4

2) WHERE CONCENTRATED LOADS OCCUR WITHIN 6" OF PANEL POINT, NO STRUT IS REQUIRED.

DETAIL 19

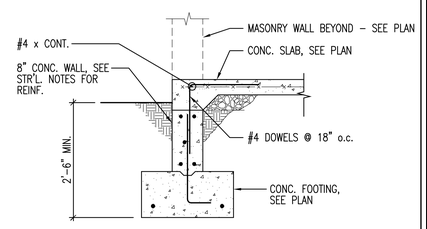

DETAIL 15

NOT USED 16

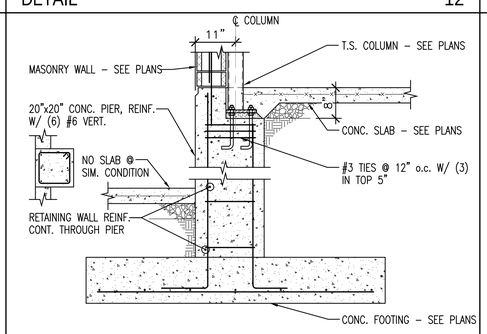

DETAIL 17

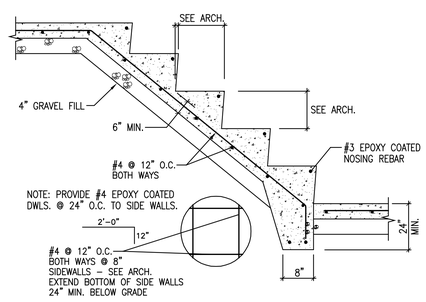

DETAIL 18

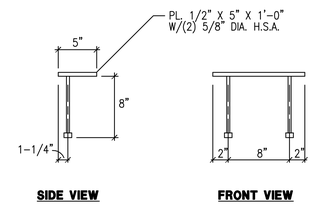

TYPICAL PERIMETER JOIST BEARING PLATE

DETAIL 20

DETAIL 21

DETAIL 22

DETAIL 23

DETAIL 24

NEW HARRISVILLE LIQUOR STORE
DEPARTMENT OF ALCHOLIC BEVERAGE CONTROL
1455 S WALL AVENUE, HARIISVILLE, UTAH

STRUCTURAL DETAILS

FRANK N MURDOCK JR ■ Architect & Associates
975 East 100 South Suite 100, Salt Lake City, Utah 84102 TEL: (801) 532-4441 FAX (801) 532-4220

REVISION # DATE:
△ -

DFCM PROJECT NO.:
04242030
CONSTRUCTION DOCS
FILE NAME: S-301.dwg
PLOT SCALE: AS NOTED
DRAWN BY: DJK
CHECKED BY: KC
DATE: JANUARY, 2006

S
301

X:\Project Files\06xxx Harrisville Liquor Store\Drawings\S-301.dwg, 30x42, 1/23/2006 2:49:23 PM

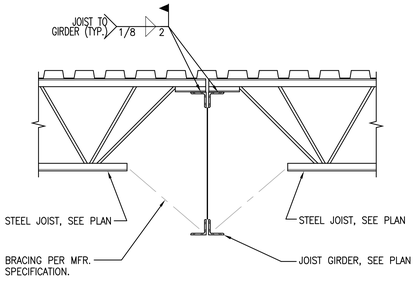

DETAIL 01

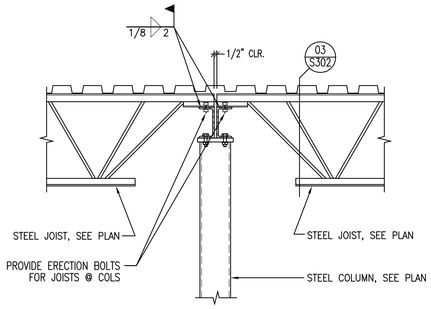

DETAIL 02

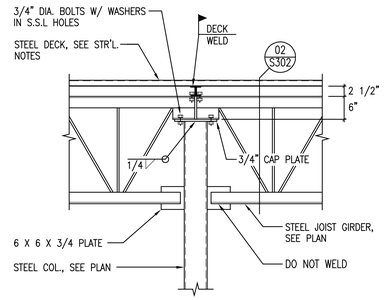

DETAIL 03

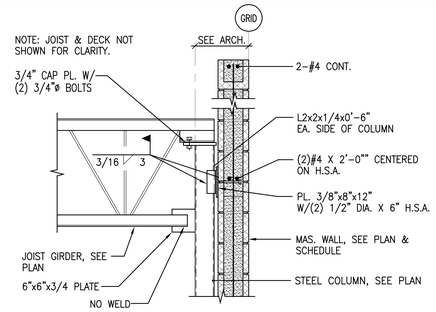

DETAIL 04

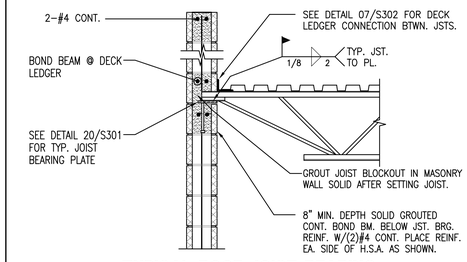

TYPICAL ROOF JOIST BEARING

DETAIL 05

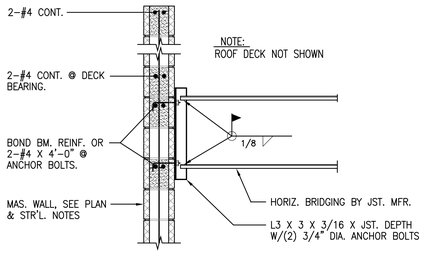

TYP. JST. BRIDGING TO WALL

DETAIL 06

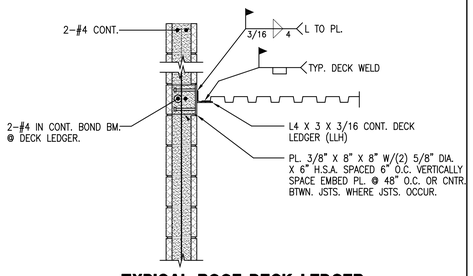

TYPICAL ROOF DECK LEDGER

DETAIL 07

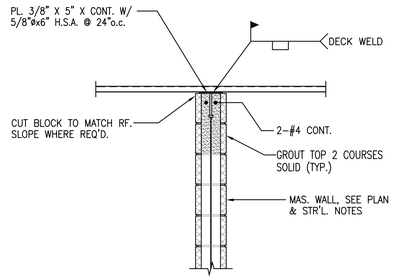

DETAIL 08

DETAIL 09

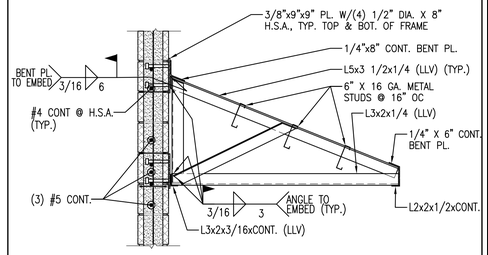

CANOPY FRAME- SEE PLAN

DETAIL 10

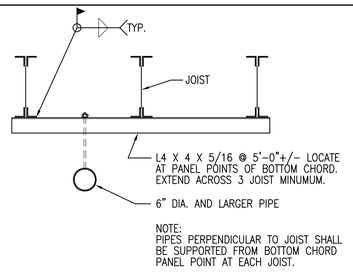

TYPICAL PIPE SUPPORT DETAIL

DETAIL 11

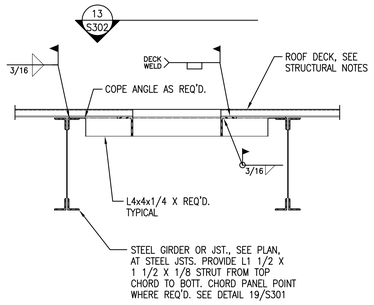

DETAIL 12

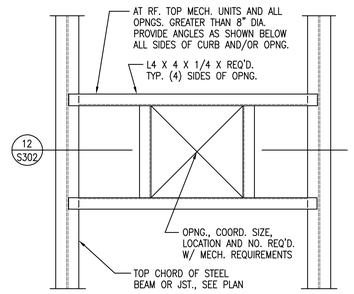

DETAIL 13

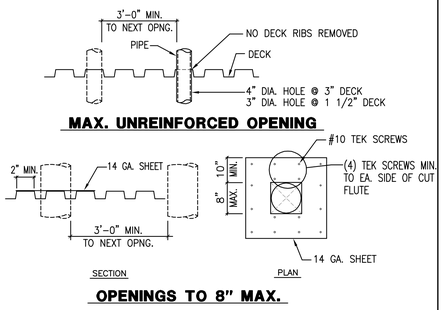

DETAIL 14

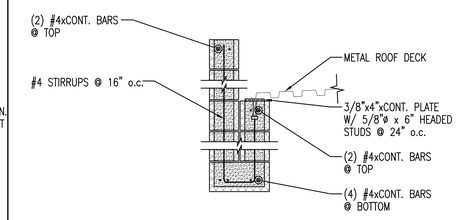

DETAIL 15

DETAIL 16

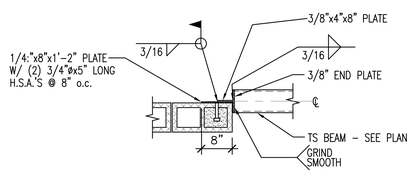

DETAIL 17

NOT USED 18

NOT USED 19

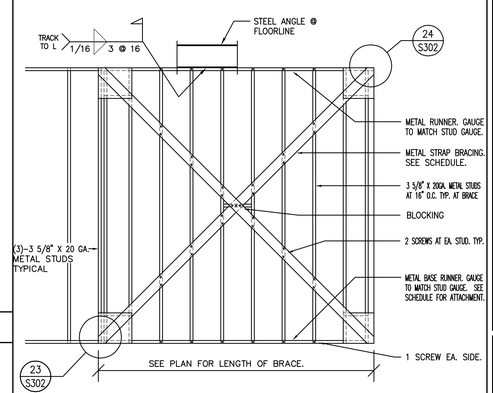

STRAP BRACE SCHEDULE

STRAP	FASTENERS (SEE DETAIL)			
	5/8" S-12 LOW PROFILE HD.			5/32" X 1 1/2" PAF.
	(A) STRAP TO GUSSET PL.	(B) GUSSET TO EA. END STUD	(C) GUSSET TO BASE RUNNER	(D) BASE RUNNER TO FOUNDATION
4"x12 GA.	16	12	12	16" o.c.

NOTE: 1/16" FILLET WELDS MAY BE SUBSTITUTED FOR SCREWS. PROVIDE 1" X 1/16" FILLET WELD FOR EACH SCREW.

DETAIL 21

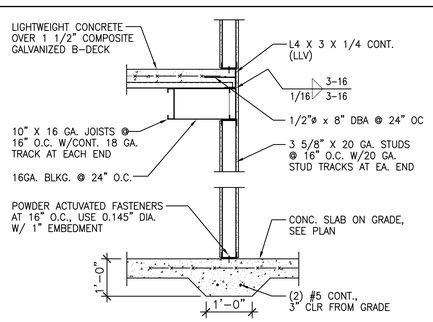

DETAIL 22

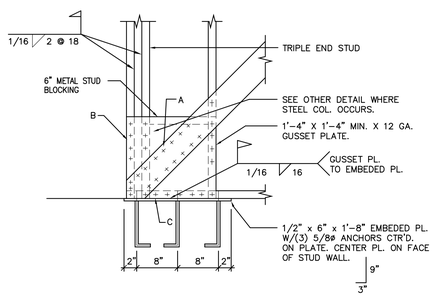

DETAIL 23

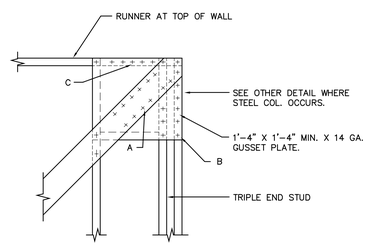

DETAIL 24

DETAIL 25

NEW HARRISVILLE LIQUOR STORE

DEPARTMENT OF ALCHOLIC BEVERAGE CONTROL
1455 S WALL AVENUE, HARIISVILLE, UTAH

STRUCTURAL DETAILS

FRANK N MURDOCK JR ■ Architect & Associates
975 East 100 South Suite 100, Salt Lake City, Utah 84102 TEL: (801) 532-4441 FAX (801) 532-4220

REVISION # DATE:
△ -

DFCM PROJECT NO.: 04242030
CONSTRUCTION DOCS
FILE NAME: S-301.dwg
PLOT SCALE: AS NOTED
DRAWN BY: DJK
CHECKED BY: KC
DATE: JANUARY, 2006

S
302

X:\Project Files\06xxx Harrisville Liquor Store\Drawings\S-302.dwg, 30x42, 1/23/2006 3:48:43 PM